Forgotten Books

www.forgottenbooks.com

Copyright © 2016 FB &c Ltd.
All rights reserved. No part of this publication may be reproduced, distributed, or transmitted in any form or by any means, including photocopying, recording, or other electronic or mechanical methods, without the prior written permission of the publisher, except in the case of brief quotations embodied in critical reviews and certain other noncommercial uses permitted by copyright law.

Cyclopedia

of

Engineering

A General Reference Work on

STEAM BOILERS, PUMPS, ENGINES, AND TURBINES, GAS AND OIL ENGINES, AUTOMOBILES, MARINE AND LOCOMOTIVE WORK, HEATING AND VENTILATING, COMPRESSED AIR, REFRIGERATION, DYNAMOS, MOTORS, ELECTRIC WIRING, ELECTRIC LIGHTING, ELEVATORS, ETC.

Editor-in-Chief

LOUIS DERR, M. A., S. B.

PROFESSOR OF PHYSICS, MASSACHUSETTS INSTITUTE OF TECHNOLOGY

Assisted by a Staff of

CONSULTING ENGINEERS, TECHNICAL EXPERTS, AND DESIGNERS OF THE HIGHEST PROFESSIONAL STANDING

Illustrated with over Two Thousand Engravings

SEVEN VOLUMES

CHICAGO

AMERICAN TECHNICAL SOCIETY

1910

COPYRIGHT, 1902, 1903, 1904, 1906, 1907, 1909
BY
AMERICAN SCHOOL OF CORRESPONDENCE

COPYRIGHT, 1902, 1903, 1904, 1906, 1907, 1909
BY
AMERICAN TECHNICAL SOCIETY

Entered at Stationers' Hall, London
All Rights Reserved

143133
JUN 13 1910
TB
.AM3
3
3188938

Editor-in-Chief

LOUIS DERR, M. A., S. B.

Professor of Physics, Massachusetts Institute of Technology

Authors and Collaborators

LIONEL S. MARKS, S. B., M. M. E.

Assistant Professor of Mechanical Engineering, Harvard University
American Society of Mechanical Engineers

LLEWELLYN V. LUDY, M. E.

Professor of Mechanical Engineering, Purdue University
American Society of Mechanical Engineers

LUCIUS I. WIGHTMAN, E. E.

Electrical and Mechanical Engineer, Ingersoll-Rand Co., New York

FRANCIS B. CROCKER, E. M., Ph. D.

Head of Department of Electrical Engineering, Columbia University, New York
Past President, American Institute of Electrical Engineers

CHARLES L. GRIFFIN, S. B.

Assistant Engineer, the Solvay-Process Co.
American Society of Mechanical Engineers

VICTOR C. ALDERSON, D. Sc.

President, Colorado School of Mines
Formerly Dean, Armour Institute of Technology

WALTER S. LELAND, S. B.

Assistant Professor of Naval Architecture, Massachusetts Institute of Technology
American Society of Naval Architects and Marine Engineers

CHARLES L. HUBBARD, S. B., M. E.

Consulting Engineer on Heating, Ventilating, Lighting, and Power

ARTHUR L. RICE, M. M. E.

Editor, *The Practical Engineer*

WALTER B. SNOW, S. B.

Formerly Mechanical Engineer, B. F. Sturtevant Co.
American Society of Mechanical Engineers

HUGO DIEMER, M. E.

Professor of Mechanical Engineering, Pennsylvania State College
American Society of Mechanical Engineers

SAMUEL S. WYER, M. E.

American Society of Mechanical Engineers
Author of "Gas-Producers and Producer Gas"

WILLIAM G. SNOW, S. B.

Steam Heating Specialist
American Society of Mechanical Engineers

GLENN M. HOBBS, Ph. D.

Secretary, American School of Correspondence
Formerly Instructor in Physics, University of Chicago
American Physical Society

LOUIS DERR, M. A., S. B.

Professor of Physics, Massachusetts Institute of Technology

JOHN H. JALLINGS

Mechanical Engineer and Elevator Expert

HOWARD MONROE RAYMOND, B. S.

Dean of Engineering, and Professor of Physics, Armour Institute of Technology

WILLIAM T. McCLEMENT, A. M., D. Sc.
Head of Department of Botany, Queen's University, Kingston, Canada

GEORGE C. SHAAD, E. E.
Head of Department of Electrical Engineering, University of Kansas

GEORGE L. FOWLER, A. B., M. E.
Consulting Engineer
American Society of Mechanical Engineers

RALPH H. SWEETSER, S. B.
Superintendent, Columbus Iron & Steel Co.
American Institute of Mining Engineers

CHARLES E. KNOX, E. E.
Consulting Electrical Engineer
American Institute of Electrical Engineers

MILTON W. ARROWOOD
Graduate, United States Naval Academy
Refrigerating and Mechanical Engineer, with the Triumph Ice Machine Company

R. F. SCHUCHARDT, B. S.
Testing Engineer, Commonwealth Edison Co., Chicago

WILLIAM S. NEWELL, S. B.
With Bath Iron Works
Formerly Instructor, Massachusetts Institute of Technology

GEORGE F. GEBHARDT, M. E., M. A.
Professor of Mechanical Engineering, Armour Institute of Technology

HARRIS C. TROW, S. B., *Managing Editor*
Editor-in-Chief, Textbook Department, American School of Correspondence
American Institute of Electrical Engineers

Authorities Consulted

THE editors have freely consulted the standard technical literature of Europe and America in the preparation of these volumes. They desire to express their indebtedness, particularly to the following eminent authorities, whose well-known treatises should be in the library of every engineer.

Grateful acknowledgment is here made also for the invaluable co-operation of the foremost engineering firms, in making these volumes thoroughly representative of the best and latest practice in the design and construction of steam and electrical machines; also for the valuable drawings and data, suggestions, criticisms, and other courtesies.

JAMES AMBROSE MOYER, S. B., A. M.

Member of The American Society of Mechanical Engineers; American Institute of Electrical Engineers, etc.; Engineer, Westinghouse, Church, Kerr & Co.
Author of "The Steam Turbine," etc.

E. G. CONSTANTINE

Member of the Institution of Mechanical Engineers; Associate Member of the Institution of Civil Engineers.
Author of "Marine Engineers."

C. W. MacCORD, A. M.

Professor of Mechanical Drawing, Stevens Institute of Technology.
Author of "Movement of Slide Valves by Eccentrics."

CECIL H. PEABODY, S. B.

Professor of Marine Engineering and Naval Architecture, Massachusetts Institute of Technology.
Author of "Thermodynamics of the Steam Engine," "Tables of the Properties of Saturated Steam," "Valve Gears to Steam Engines," etc.

FRANCIS BACON CROCKER, M. E., Ph. D.

Head of Department of Electrical Engineering, Columbia University; Past President American Institute of Electrical Engineers.
Author of "Electric Lighting," "Practical Management of Dynamos and Motors."

SAMUEL S. WYER

Mechanical Engineer; American Society of Mechanical Engineers.
Author of "Treatise on Producer Gas and Gas-Producers," "Catechism on Producer Gas."

E. W. ROBERTS, M. E.

Member, American Society of Mechanical Engineers.
Author of "Gas-Engine Handbook," "Gas Engines and Their Troubles," "The Automobile Pocket-book," etc.

GARDNER D. HISCOX, M. E.

Author of "Compressed Air," "Gas, Gasoline, and Oil-Engines," "Mechanical Movements," "Horseless Vehicles, Automobiles, and Motor-Cycles," "Hydraulic Engineering," "Modern Steam Engineering," etc.

EDWARD F. MILLER

Professor of Steam Engineering, Massachusetts Institute of Technology.
Author of "Steam Boilers."

ROBERT M. NEILSON

Associate Member, Institution of Mechanical Engineers; Member of Cleveland Institution of Engineers; Chief of the Technical Department of Richardsons, Westgarth and Co., Ltd.
Author of "The Steam Turbine."

ROBERT WILSON

Author of "Treatise on Steam Boilers," "Boiler and Factory Chimneys," etc.

CHARLES PROTEUS STEINMETZ

Consulting Engineer, with the General Electric Co.; Professor of Electrical Engineering, Union College.
Author of "The Theory and Calculation of Alternating-Current Phenomena," "Theoretical Elements of Electrical Engineering," etc.

JAMES J. LAWLER

Author of "Modern Plumbing, Steam and Hot-Water Heating."

WILLIAM F. DURAND, Ph. D.

Professor of Marine Engineering, Cornell University.
Author of "Resistance and Propulsion of Ships," "Practical Marine Engineering."

HORATIO A. FOSTER

Member, American Institute of Electrical Engineers; American Society of Mechanical Engineers; Consulting Engineer.
Author of "Electrical Engineer's Pocket-book."

ROBERT GRIMSHAW, M. E.

Author of "Steam Engine Catechism," "Boiler Catechism," "Locomotive Catechism," "Engine Runners' Catechism," "Shop Kinks," etc.

SCHUYLER S. WHEELER, D. Sc.

Electrical Expert of the Board of Electrical Control, New York City; Member American Societies of Civil and Mechanical Engineers.
Author of "Practical Management of Dynamos and Motors."

J. A. EWING, C. B., LL. D., F. R. S.

Member, Institute of Civil Engineers; formerly Professor of Mechanism and Applied Mechanics in the University of Cambridge; Director of Naval Education.
Author of "The Mechanical Production of Cold," "The Steam Engine and Other Heat Engines."

LESTER G. FRENCH, S. B.

Mechanical Engineer.
Author of "Steam Turbines."

ROLLA C. CARPENTER, M. S., C. E., M. M. E.

Professor of Experimental Engineering, Cornell University; Member of American Society Heating and Ventilating Engineers; Member American Society Mechanical Engineers.
Author of "Heating and Ventilating Buildings."

J. E SIEBEL

Director, Zymotechnic Institute, Chicago.
Author of "Compend of Mechanical Refrigeration."

WILLIAM KENT, M. E.

Consulting Engineer; Member of American Society of Mechanical Engineers, etc.
Author of "Strength of Materials," "Mechanical Engineer's Pocket-book," etc.

WILLIAM M. BARR

Member American Society of Mechanical Engineers.
Author of "Boilers and Furnaces," "Pumping Machinery," "Chimneys of Brick and Metal," etc.

WILLIAM RIPPER

Professor of Mechanical Engineering in the Sheffield Technical School; Member of the Institute of Mechanical Engineers.
Author of "Machine Drawing and Design," "Practical Chemistry," "Steam," etc.

J. FISHER-HINNEN

Late Chief of the Drawing Department at the Oerlikon Works.
Author of "Continuous Current Dynamos."

SYLVANUS P. THOMPSON, D. Sc., B. A., F. R. S., F. R. A. S.

Principal and Professor of Physics in the City and Guilds of London Technical College.
Author of "Electricity and Magnetism," "Dynamo-Electric Machinery," etc.

ROBERT H. THURSTON, C. E., Ph. B., A. M., LL. D.

Director of Sibley College, Cornell University.
Author of "Manual of the Steam Engine," "Manual of Steam Boilers," "History of the Steam Engine," etc.

JOSEPH G. BRANCH, B. S., M. E.

Chief of the Department of Inspection, Boilers and Elevators; Member of the Board of Examining Engineers for the City of St. Louis.
Author of "Stationary Engineering," "Heat and Light from Municipal and Other Waste," etc.

JOSHUA ROSE, M. E.

Author of "Mechanical Drawing Self Taught," "Modern Steam Engineering," "Steam Boilers," "The Slide Valve," "Pattern Maker's Assistant," "Complete Machinist," etc.

CHARLES H. INNES, M. A.

Lecturer on Engineering at Rutherford College.
Author of "Air Compressors and Blowing Engines," "Problems in Machine Design," "Centrifugal Pumps, Turbines, and Water Motors," etc.

GEORGE C. V. HOLMES

Whitworth Scholar; Secretary of the Institute of Naval Architects, etc.
Author of "The Steam Engine."

FREDERIC REMSEN HUTTON, E. M., Ph. D.

Emeritus Professor of Medical Engineering in Columbia University; Past Secretary and President of American Society of Mechanical Engineers.
Author of "The Gas Engine," "Mechanical Engineering of Power Plants," etc.

MAURICE A. OUDIN, M. S.

Member of American Institute of Electrical Engineers.
Author of "Standard Polyphase Apparatus and Systems."

WILLIAM JOHN MACQUORN RANKINE, LL. D., F. R. S. S.

Civil Engineer; Late Regius Professor of Civil Engineering in University of Glasgow.
Author of "Applied Mechanics," "The Steam Engine," "Civil Engineering," "Useful Rules and Tables," "Machinery and Mill Work," "A Mechanical Textbook."

DUGALD C. JACKSON, C. E.

Head of Department of Electrical Engineering, Massachusetts Institute of Technology; Member of American Institute of Electrical Engineers.
Author of "A Textbook on Electro-Magnetism and the Construction of Dynamos," "Alternating Currents and Alternating-Current Machinery."

A. E. SEATON

Author of "A Manual of Marine Engineering."

WILLIAM C. UNWIN, F. R. S., M. Inst. C. E.

Professor of Civil and Mechanical Engineering, Central Technical College, City and Guilds of London Institute, etc.
Author of "Machine Design," "The Development and Transmission of Power," etc.

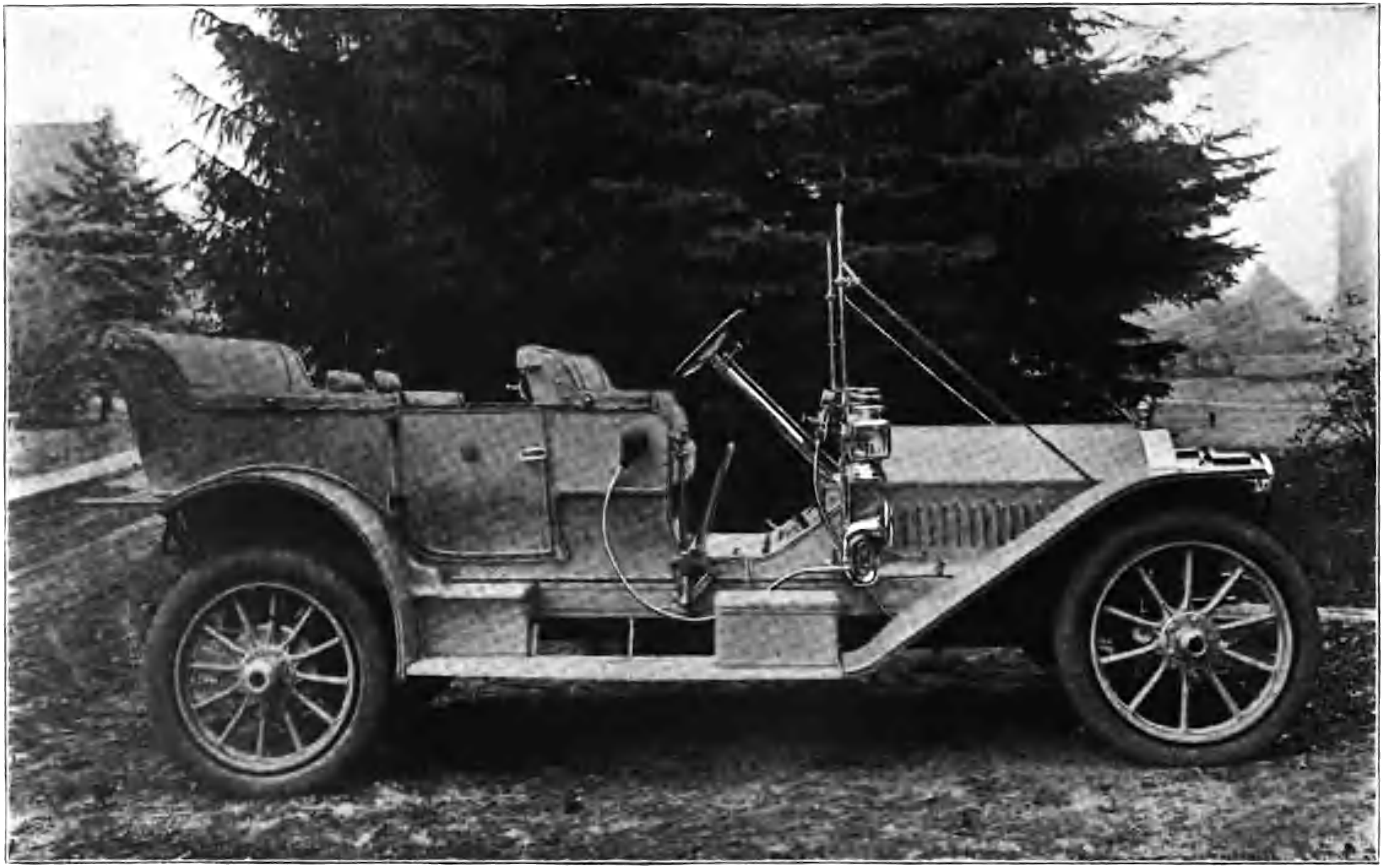

OLDSMOBILE TOURING CAR, MODEL Z.
Olds Motor Works, Lansing, Mich.

Foreword

THE rapid advances made in recent years in all lines of engineering, as seen in the evolution of improved types of machinery, new mechanical processes and methods, and even new materials of workmanship, have created a distinct necessity for an authoritative work of general reference embodying the accumulated results of modern experience and the latest approved practice. The Cyclopedia of Engineering is designed to fill this acknowledged need.

¶ The aim of the publishers has been to create a work which, while adequate to meet all demands of the technically trained expert, will appeal equally to the self-taught practical man, who may have been denied the advantages of training at a resident technical school. The Cyclopedia not only covers the fundamentals that underlie all engineering, but places the reader in direct contact with the experience of teachers fresh from practical work, thus putting him abreast of the latest progress and furnishing him that adjustment to advanced modern needs and conditions which is a necessity even to the technical graduate.

¶ The Cyclopedia of Engineering is based upon the method which the American School of Correspondence has developed and successfully used for many years in teaching the principles and practice of Engineering in its different branches.

¶ The success which the American School of Correspondence has attained as a factor in the machinery of modern technical and scientific education is in itself the best possible guarantee

for the present work. Therefore, while these volumes are a marked innovation in technical literature—representing, as they do, the best ideas and methods of a large number of different authors, each an acknowledged authority in his work—they are by no means an experiment, but are, in fact, based on what has proved itself to be the most successful method yet devised for the education of the busy man. The formulæ of the higher mathematics have been avoided as far as possible, and every care exercised to elucidate the text by abundant and appropriate illustrations.

¶ Numerous examples for practice are inserted at intervals; these, with the text questions, help the reader to fix in mind the essential points, thus combining the advantages of a textbook with those of a reference work.

¶ The Cyclopedia has been compiled with the idea of making it a work thoroughly technical yet easily comprehended by the man who has but little time in which to acquaint himself with the fundamental branches of practical engineering. If, therefore, it should benefit any of the large number of workers who need, yet lack, technical training, the publishers will feel that its mission has been accomplished.

¶ Grateful acknowledgment is due the corps of authors and collaborators—engineers and designers of wide practical experience, and teachers of well-recognized ability—without whose co-operation this work would have been impossible.

Table of Contents

VOLUME III

GAS-PRODUCERS . . . . . *By S. S. Wyer*† Page *11

Analysis of Producer Gas—Gaseous Fuels—Manufacture of Producer Gas—Working of Gas-Producer—Gasification Losses—Weight, Specific Heat, Gravity, etc., of Producer Gas—Commercial Types of Gas-Producers—Heat Losses—Water Regulators—Gas Cleaning—Deflectors—Scrubbers—Coolers—Filters—Removal of Tar—Producer-Gas Power Plants

GAS AND OIL ENGINES . . . . . *By L. S. Marks* Page 75

External and Internal Combustion—Historical Sketch—Otto Cycle (Admission, Compression, Ignition, Exhaust)—Modern Gas Engines—Commercial Types—Valve Gearing—Pressures and Temperatures—Work and Efficiency—Indicator Cards—Horse-Power—Ignition Systems—Timing Valve—Spark-Plugs—Storage Batteries—Dynamos—Magnetos—Speed Governing—Induction Coils—Starting—Water Jacket—Air-Cooling—Explosive Mixture—Muffler—Compound and Double-Acting Engines—Multi-Cycle Engines—Back-Firing—Fuels—Large Gas Engines—Gas Cleaners—Liquid Fuels (Petroleum, Gasoline, Denatured Alcohol, etc.)—Carbureters—Gasoline Engines—Kerosene and Crude Oil Engines—Vaporizers—Diesel Engine—Marine Engines—Operation and Care of Engine—Troubles and Remedies

AUTOMOBILES . . . . . *By Hugo Diemer* Page 227

Running Gear—Power Plant—Springs—Axles—Steering Gear—Gas-Engine Cycle—Two-Cycle Engines—Single- and Multi-Cylinder Engines—Valves—Cooling Systems—Non-Freezing Mixtures—Carbureters—Explosive Mixture—Ignition Systems—Dry-Cell and Jump-Spark System—Wiring Circuits—Dynamo and Storage Battery Ignition—Magneto Ignition—Make-and-Break System—Speed Control—Power-Transmission—Clutches—Speed-Changing Gears—Planetary Gear—Sliding Gear—High- and Low-Speed Levers—Driving Systems—Universal Joints—Differential or Balance Gears—Lubrication—Forced Feed—Brakes—Bearings—Automobile Operation—Starting—Loss of Power in Engine—Racing of Engine—Lack of Speed—Knocking of Engine—Weak Batteries—Noises—Back-Firing—Skidding—Going down Steep Hills—Inspection on Road—Cleaning and Washing—Care of Tires—Electric Vehicles—Storage Batteries—Charging—Steam Cars—Selecting a Motor-Car—Standing of Manufacturers—Price—Second-Hand Cars—Demonstrations—Relation of Horse-Power to Weight—Easy Riding—Accessibility of Parts—Instruction in Driving—Hill Climbing—Chauffeurs—Clothing—Accessories—Passenger Vehicles—Commercial Vehicles—Uses of Different Types of Cars

REVIEW QUESTIONS . . . . . Page 421

INDEX . . . . . Page 435

---

*For page numbers, see foot of pages.

† For professional standing of authors, see list of Authors and Collaborators at front of volume.

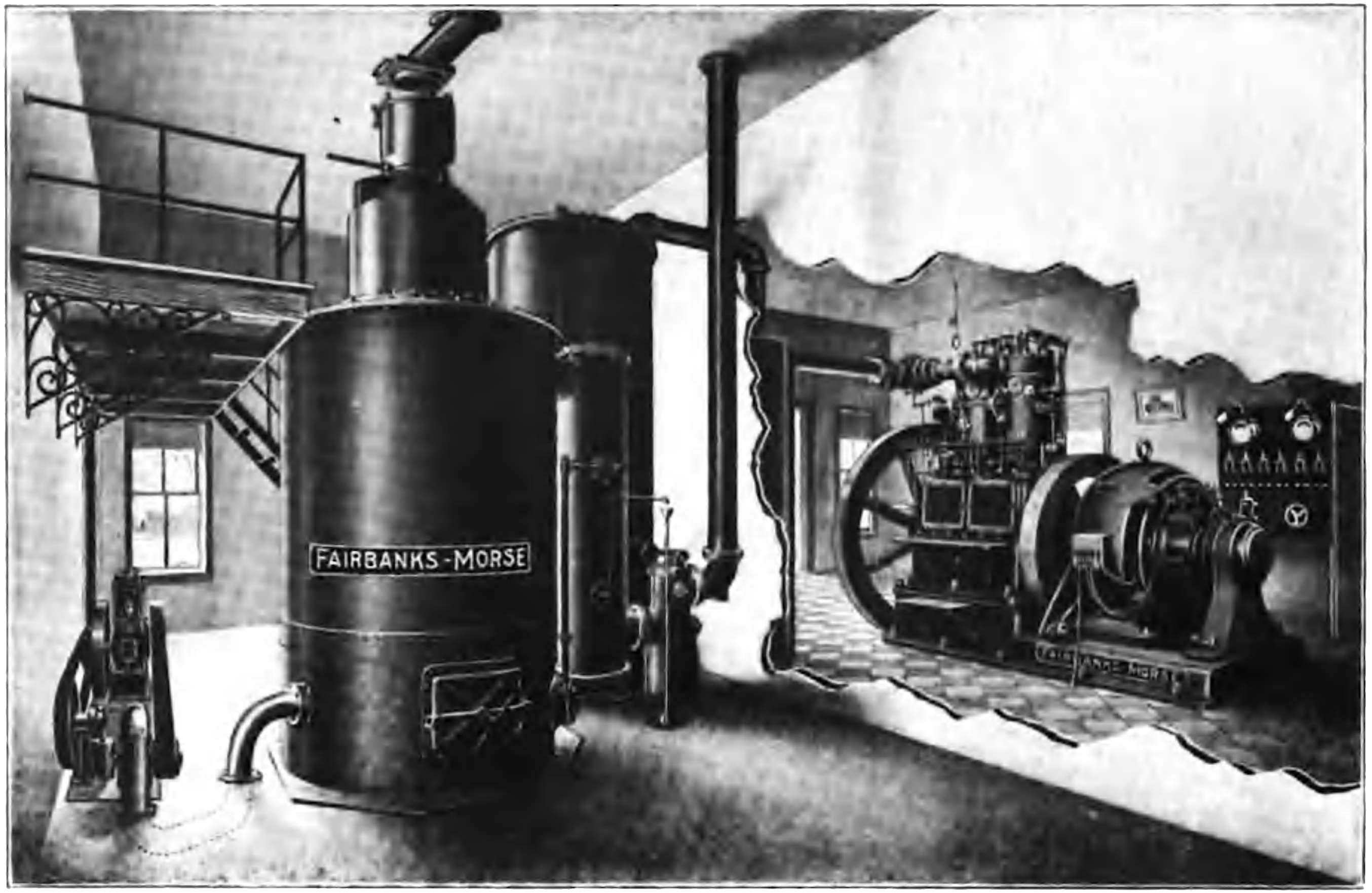

COMPLETE PRODUCER-GAS POWER PLANT FOR ELECTRIC LIGHT AND POWER
100-H. P. Producer-Gas Engine, Direct-Connected to Dynamo.
Fairbanks, Morse & Co., Chicago, Ill.

GAS-PRODUCERS

INTRODUCTION

Gaseous fuel has long been a desideratum, and many modern industries demand it for their successful operation Where nature has not supplied it, man has been compelled to make it. The intelligent appreciation of the method of manufacture and of the advantages of gaseous fuels in general, and producer gas in particular, necessitates a clear understanding of certain fundamental facts.

Gases may be divided into three classes. *Elementary, Compound,* and *Mixtures.* Elementary gases consist of one element only—as oxygen, for instance. Compound gases are composed of two or more elements in chemical combination—as marsh gas, for instance, in which carbon and hydrogen are combined. Mixtures are not definite compounds, but consist of two or more elementary or compound gases simply mixed together without any chemical affinity existing between any of the constituents. Producer gas belongs to the class of mixtures. Table 1 shows the composition of a representative sample of producer gas:

TABLE 1

Typical Producer-Gas Analysis

Combustible	Hydrogen	8.0	per cent
	Marsh gas	3.0	" "
	Olefiant gas	0.5	" "
	Carbon monoxide	24.0	" "
Condensible	Tar	1.0	" "
	Water vapor	1.0	" "
Diluents	Carbon dioxide	3.0	"
	Oxygen	0.5	" "
	Nitrogen	59.0	" "
		100.0	

The proportion of each constituent present will depend upon the nature of the raw fuel, the type of producer, and the method of operation. Water vapor and tar, although generally present, are not usually determined and given in the analysis, since both will nearly always

condense within a short distance from the producer. It is evident that the properties of producer gas will be determined by its constituents. That is, the presence of certain desirable or undesirable constituents will give the gas desirable or undesirable properties, and these properties will be proportional to the relative percentage present of the constituents in question. Hence it is desirable to know the properties of each constituent so that its effect on the gas as a whole may be determined.

Hydrogen is the lightest known substance, is colorless, odorless, non-poisonous, very combustible, non-luminous, and burns with a pale blue flame.

Marsh gas, also called methane, is odorless, colorless, has a high calorific power but slow rate of combustion, and burns with a slightly luminous flame.

Olefiant gas, also called ethylene or ethene, has a high calorific power, is colorless and odorless, and burns with a very luminous flame. It is sometimes spoken of as an "illuminant."

Carbon monoxide, also called carbonic oxide, is a deadly poison, colorless, odorless, insoluble in water, and burns with a blue flame.

Carbon dioxide, also called carbonic anhydride or carbonic acid, is soluble in water, odorless, colorless, and non-combustible.

Oxygen is colorless, tasteless, odorless, and its presence in producer gas decreases the amount of oxygen that must be furnished for combustion.

Nitrogen is odorless, colorless, non-combustible, and has no effect on producer gas except to act as a diluent.

Water vapor comes from undecomposed steam passing through the fuel. On account of its high specific heat, it may cause a large heat loss.

The tar in producer gas comes directly from the fuel; it will condense quite easily and will then be precipitated in the pipes.

A fixed or permanent gas is one that will not precipitate any condensible constituents when the gas is cooled. Producer gas should be composed of fixed gases only. The gas will always be cooled after leaving the producer; and, if it contains any condensible constituents, these will be deposited in the pipes; not only will this cause a heat loss but will also give trouble from the clogging of the pipes.

Purchase full membership to immediately unlock this page

HISTORY

Tens of thousands of important historical sources, many previously unobtainable, are now available for the first time with a Forgotten Books Full Membership.

Unlimited Access
$8.99/month

Continue

*Fair usage policy applies

The *British thermal unit* (B. T. U.) is the amount of heat required to raise one pound of water one degree Fahrenheit. The Centigrade unit (C. U.) is the amount of heat required to raise one pound of water one degree Centigrade.

The calory is the amount of heat required to raise one kilogram of water one degree Centigrade.

The *gram-calory* is the amount of heat required to raise one gram of water one degree Centigrade.

The *calorific power*—or, which is the same thing, the *heating power*—of a gas, is the number of heat units evolved by the complete combustion of a unit volume of the gas.

Gas firing requires that the fuel bed be *thick* and *compact* enough to permit only a partial combustion of the fuel, so that a stream of combustible gas will be given off at the surface of the fuel. Direct firing requires that the fuel bed shall be sufficiently *thin* and *porous* to permit enough oxygen to get through the interstices in the fuel bed to produce vigorous combustion at the surface of the fuel.

GASEOUS FUELS

A proper understanding of producer gas requires a clear conception of the other well-known gaseous fuels with which it is frequently associated.

Retort gas is made by the destructive distillation of coal—*i. e.*, by heating coal in retorts without access of air. The gases are drawn off by an exhauster; the residual coke, which is a by-product, is removed at intervals and replaced by a charge of fresh fuel. The principal use of this gas is for illumination purposes. "Bench," "coal," "city," "illuminating," and "artificial," are some of the terms sometimes applied to this gas.

Coke-oven gas is evolved in the manufacture of coke in by-product ovens, and is quite similar in composition and method of manufacture to retort gas. The method of manufacture differs in this respect, that the gas is the by-product and the coke the main product, which is the reverse of retort gas.

Water gas is made by bringing steam in contact with incandescent carbon. It consists essentially of hydrogen and carbon monoxide. The fuel is first blown up by an air blast, and then steam is introduced for a short time; this will cause the fire to cool rapidly

and necessitates frequent reblowing. As a result, the process is intermittent.

Carburetted water gas consists of ordinary water gas into which some hydrocarbons, such as oil or naphtha, have been injected to make the gas luminous.

Oil gas is made by vaporizing oil passed through highly heated tubes.

Blast-furnace gas is the waste gas evolved in the ordinary blast furnace, which is simply a huge gas-producer. The gas is quite similar to producer gas.

Producer gas is the gas resulting from the gasification of solid fuel where the heat required in the process is obtained by a partial combustion of the fuel itself.

From the preceding, it will be seen that producer gas has several competitors. Yet it is the most extensively used artificial fuel gas in existence.

A large amount of experimental and inventive work has been done on the manufacture of gaseous fuels. The path has been strewn with failures, and this field of industrial development has become the graveyard of abandoned fuel-gas processes and shattered hopes of immature and visionary enthusiasts who have not understood the problem in all its phases. There is no such thing as chance or luck in the inventive world. All results are the consequence of the operation of definite laws. The supremacy of one system of fuel-gas manufacture over its competitors must be due to certain definite causes and effects. The proper appreciation of the advantages of producer gas requires that we should know the real reasons why it has been able to surpass all the other fuel-gas processes in the race for commercial supremacy.

A successful fuel-gas process must be *simple, efficient, continuous,* and *flexible.*

Natural gas is restricted to such a limited territory that its extensive use is out of the question. Retort gas requires a definite quality of coal, and a large, complicated plant, and makes a residue which must be disposed of. Coke-oven gas can be made only in a large, complicated plant, and requires the attention of a skilled chemist, and a ready market for the coke. The water-gas process is intermittent, complicated, and not very efficient. The carburetted water-

gas process, in addition to having the disadvantages of the straight water-gas process, requires oil for the carburetting. Oil gas is restricted to a very limited territory, since it can be used commercially only where the cost of oil is very low. Blast-furnace gas can be obtained only in connection with the operation of large iron works; hence it cannot be adapted to many localities or conditions.

Producer gas combines simplicity, efficiency, continuity, and flexibility in one compact and harmonious unit. Gas-producers for the manufacture of producer gas are simple in construction; can be used through a large range of sizes; are efficient; do not make a residue to be disposed of; can be used with almost any available fuel; and can be operated continuously. The reasons just given account for the supremacy of the producer-gas process over its competitors.

There has been an unusual demand for a gaseous fuel within the last few years, and this has given the producer-gas industry an unprecedented growth. This demand, and the resulting growth, are due to the advent of the gas engine, the appreciation of the value of gaseous fuel for ceramic and metallurgical operations, and the constant diminution of the natural gas supply. The gas engine, on account of its high efficiency, has many advantages over the reciprocating steam engine or the steam turbine. A gas-engine power plant will give more power from a given amount of fuel than is possible to obtain from a steam power plant. Yet, to be able to compete with the steam engine, the gas engine must be supplied with a suitable and inexpensive gaseous fuel such as we have in producer gas. The highest and most easily controlled working temperatures, perfect combustion—thus eliminating the smoke nuisance—and high fuel economy, are possible only by the use of a gaseous fuel. Since many ceramic and metallurgical operations require such conditions for successful operation, it is evident that an adaptable fuel gas like producer gas has an extensive use in such work. Many industries which in the past have used natural gas for fuel, have started to use producer gas because in many cases the cost of the natural gas has become prohibitive as the supply has diminished.

HISTORY OF PRODUCER GAS

About 1834, Faber du Faur, a German engineer, began using blast-furnace gas for heating furnaces at a German iron works.

This gave such good results that the demand for the gas was greater than the supply furnished by the furnaces. From this he reasoned that it would be desirable to build a low type of blast furnace, omitting the charge of iron and using the furnace only for the production of gas to supply the increased demand. Circumstances prevented Faber du Faur carrying this idea into practice; but he announced it at that time, and several contemporary engineers began working on the problem. The first gas-producer was probably built by Bischof in 1839. It is shown in Fig. 1, and resembles a small blast furnace. A is the ash-pit under grate B; C and D are cleaning doors, the former being made with openings to admit the air; E is the body of the producer; F and G are doors for charging the producer with fuel; H is the gas exit; I shows a peep-hole for examining the condition of the fire. The producer was connected to a furnace, from which it received the necessary draught.

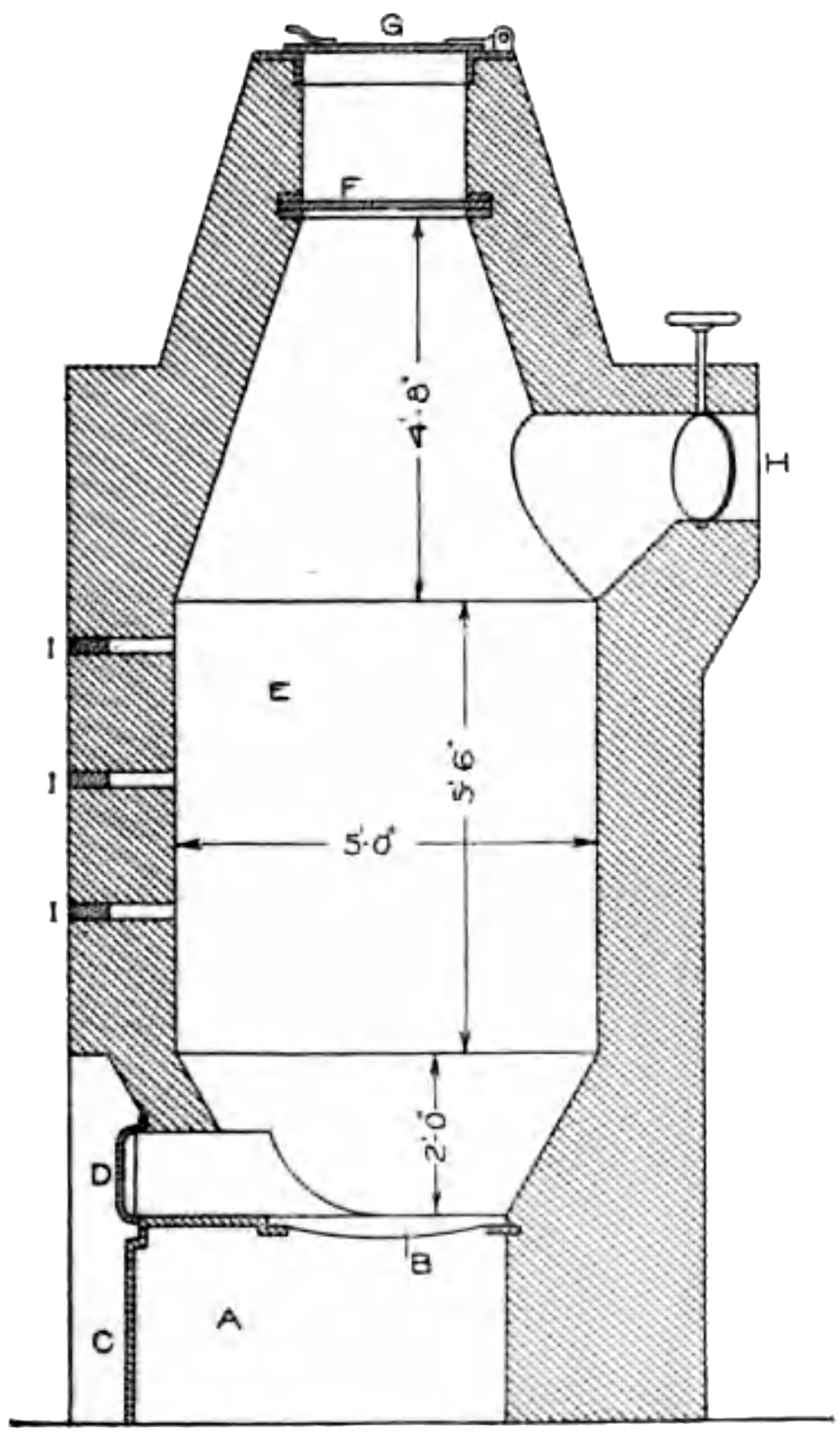

Fig. 1. First Gas-Producer.

Ekman in Sweden, Wedding in Germany, Ebelmen in France, and Siemens in England, were also working on the problem between 1840 and 1860; and they all built certain types of producers. Ebelmen anticipated several present-day types of producers.

The first producer to be used to any extent was the Siemens, which was introduced in England about 1860. This forms the com-

mercial starting point of the producer-gas industry. Dowson, in 1878, was the first to use producer gas for power purposes. The suction gas-producer was introduced on a commerical scale by Benier in France, in 1895.

MANUFACTURE OF PRODUCER GAS

Introduction. The simplest form of producer gas consists of a mixture of nitrogen and carbon monoxide. That is, when a bed of charcoal or coke is blown with a dry air-blast, the fuel bed will soon be at a white heat, when the following reaction will take place:

(1) $$C + \underset{\text{air}}{(O + N)} = CO + N.$$

In case carbon dioxide is formed, it should be immediately converted into the monoxide, on account of the excess of incandescent carbon. Thus:

(2) $$CO_2 + C = 2CO.$$

The heat required for gasification is that which is evolved in burning the carbon to carbon monoxide. The heat available in the gas is that which will be evolved when the carbon monoxide is burned to carbon dioxide. The heat loss by this method is very high, as is shown by the following example:

1 lb. C	burned to CO_2	evolves	14,500 B. T. U.	=	Heat in fuel
1 lb. C	" " CO	"	4,450 "	=	" lost
			10,050 "	=	Available heat in

gas (about 70 per cent).

On account of the high heat loss, the use of simple producer gas is now obsolete. The judicious use of steam will not only curtail this loss, but will also increase the heating value of the gas, and will eliminate some of the difficulties of producer operation. Thus a small amount of water gas is made along with the producer gas. In some producers, the fuel undergoes a partial destructive distillation before going onto the fuel bed proper. Hence, modern producer gas is nearly always made in a trinity of processes, the best features of the retort, water, and producer-gas processes being combined into one simple, continuous, and efficient process. This combination of the best elements of other systems is the secret of the extensive present-day use of producer gas.

Gas-Producer. This term is applied to the apparatus in which producer gas is made. It is not, however, very satisfactory, since it fails to be mutually inclusive and exclusive, which is the fundamental requirement of a satisfactory descriptive name. The term is frequently applied to apparatus that is used for making gases other than producer gas. Although evidently unsatisfactory, the term has been in use so long that it is now impossible to replace it with a more rational one.

Typical Producer. A typical producer is shown in Fig. 2. It consists essentially of a steel jacket A; fire-brick lining B; support C;

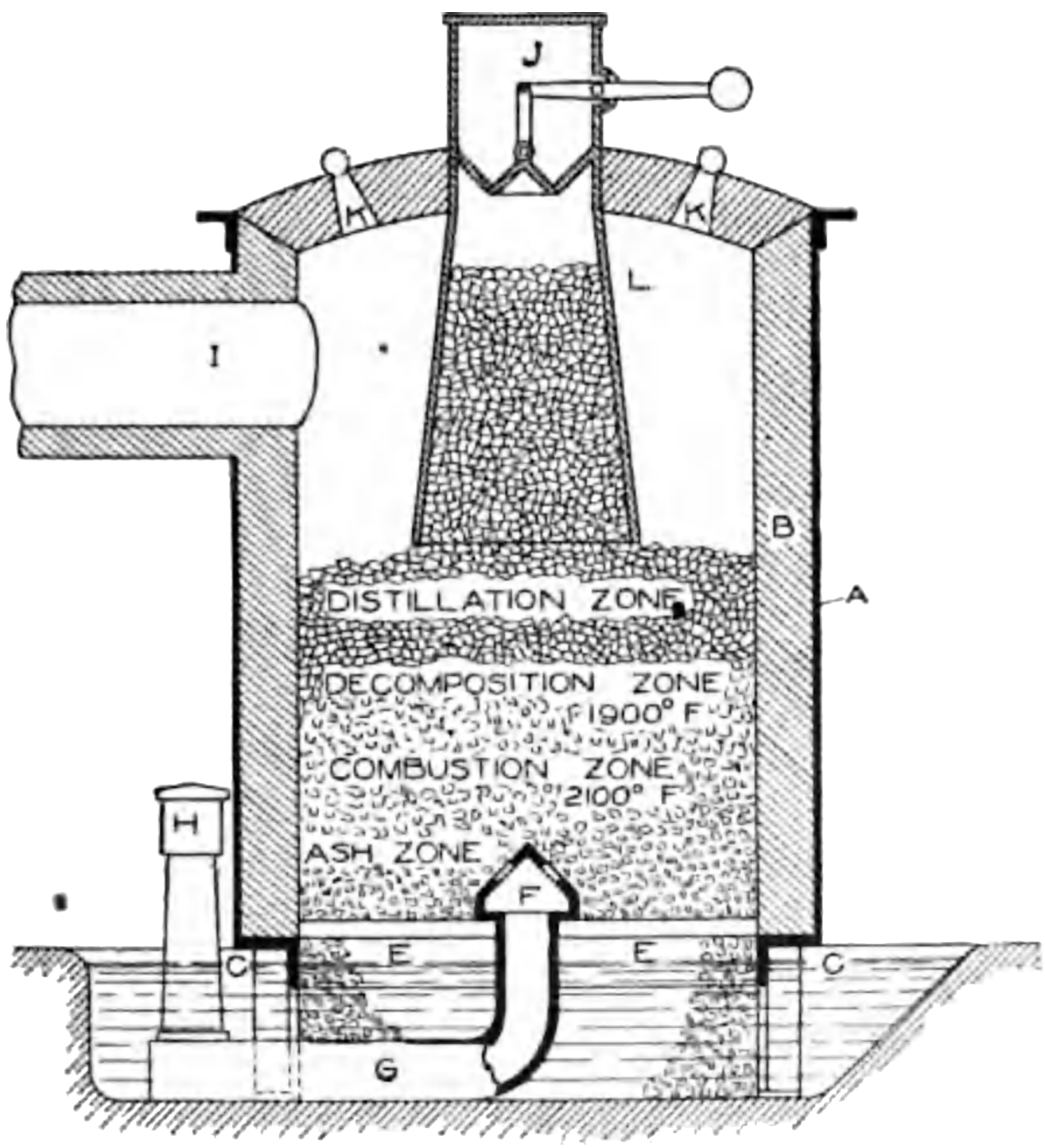

Fig. 2. Typical Gas-Producer.

grate E; tuyère F; air blast H; charging hopper J; poke-hole K; and retort L. In American types, L is usually omitted; but it is used quite extensively in European types. Frequently the grate is omitted and the fuel rests directly on the ash-pan bottom.

Steam Blowers. The steam and air should be introduced together so as to secure a thorough admixture. In a large number of producers, the air is forced into the producer by a steam blower, which is simply an air-injector. Since a small quantity of steam must carry

in a large quantity of air, the area of the surface of contact between the two should be as large as possible, for "the quantity of air delivered per minute by a steam jet depends upon the surface of contact between the air and the steam, irrespective of the steam pressure, up to the limit of exhaustion or compression that the steam jet is capable of producing." To secure this, the steam jet should be very thin and of annular form. There are two general types of steam blowers—the *solid-jet* type, shown in Fig. 3; and the *annular-jet* type, shown in

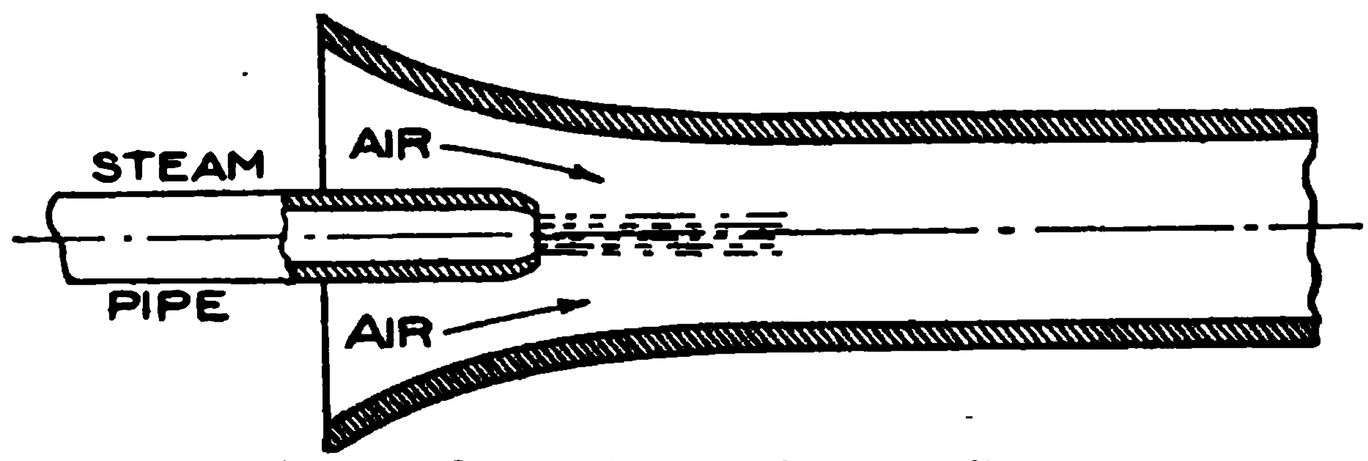

Fig. 3. Steam Blower—Solid-Jet Type.

Fig. 4. Referring to the former, it will be seen that there is a very small area of surface contact between the air and steam; and as a result, this form of blower is very efficient. The annular type will

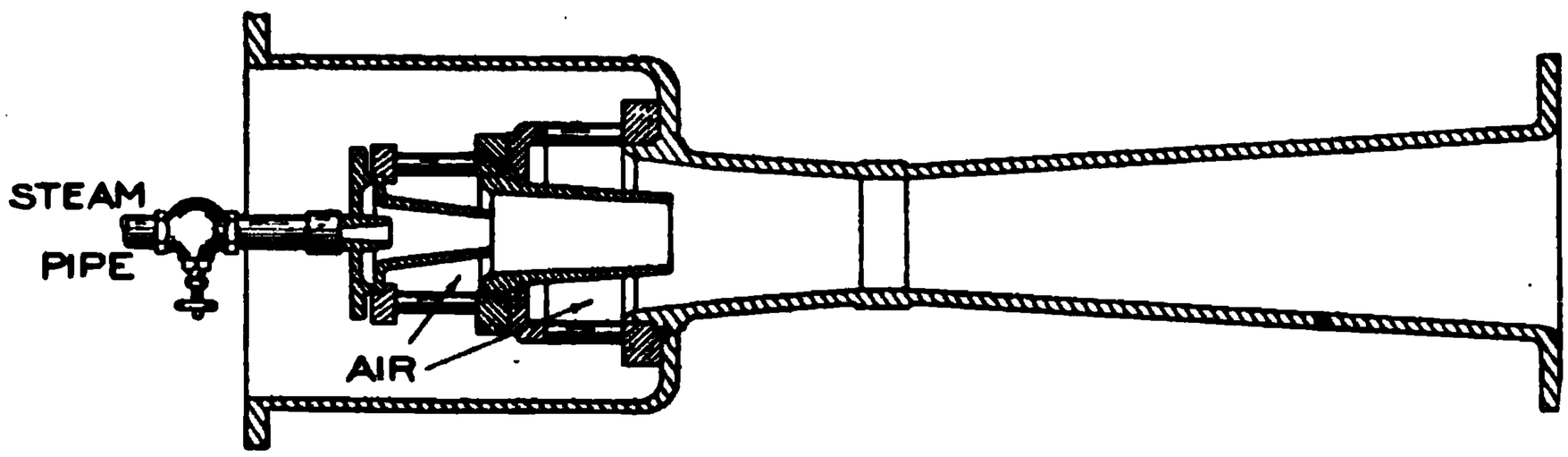

Fig. 4. Steam Blower—Annular-Jet Type.

deliver several times as much air with a unit quantity of steam as the solid-jet type.

Chemical Action in Gas-Producer. This is not complicated, and will be understood more readily by considering each successive step. Fig. 2 shows the fuel bed divided into four zones. In practice, the line of demarcation between the different zones is not always distinct, and they sometimes overlap one another.

No reactions take place in the *ash zone*, but it serves to protect the grate from the intense heat of the upper zones, and also preheats the air-blast.

Purchase full membership to immediately unlock this page

DELVE INTO FANTASY, MAGIC, MYTHOLOGY & FOLKLORE

Forgotten Books' Full Membership gives access to 797,885 ancient and modern, fiction and non-fiction books.

Continue

*Fair usage policy applies

carrying pipes if the distance is considerable. This will not only mean a heat loss, but will cause trouble in clogging the pipes.

The advantages of *hot* and *cold* gas for heating purposes have been vigorously debated in the past. Both sides have certain advantages; but the conclusions are in favor of cool gas, especially if the cooling may be done in such a way as to utilize the sensible heat extracted. The producer should be so arranged that the sensible heat of the gas may be utilized for preheating either the fuel or the air. The pipes for carrying hot gas must be larger than those for cold gas, since the thermal energy of a cubic foot of gas when it is cold is distributed through about two cubic feet when the gas has a temperature of 800 degrees Fahrenheit. The valves and dampers for handling hot gas must be water-cooled to prevent warping. Further, for gas-engine work the sensible heat is of no value, and the gas should be cooled when it goes into the engine cylinder.

Preheated air will not only conserve the heat losses, but will also induce better gasifying conditions. Combustion with preheated air will be much more intense than with cold air; and as a result, higher temperatures can be obtained. The waste heat in the gas engine exhaust should be used for this purpose when a producer furnishes the gas for the engine. By such an arrangement, in many cases, the efficiency of the producer can be increased ten per cent.

The temperature of the fire is of the greatest importance. A satisfactory operation of the producer can never be secured unless the different zones are kept at their proper temperatures. Low temperatures are conducive to the formation of small amounts of carbon monoxide, and large amounts of carbon dioxide and water vapor, thus causing a heavy heat loss, since the last two are not only diluents, but also represent a certain heat loss in the producer. An excess of steam will be sure to cause a reduction of temperature. Fig. 2 shows the proper temperatures for the different zones. The effect of different temperatures on the composition of the gas, is shown in Table 3 which is taken from an actual test:

The steam acts as a *carrier* of heat energy between the producer and the chamber in which the gas is to be burned. All the heat absorbed from the producer in the decomposition of the steam and in the formation of hydrogen will be given out when the hydrogen is burned back to water. That is, when steam is used, a certain amount

of sensible heat that would otherwise be wasted in the producer-gas process is locked up temporarily in the form of hydrogen, and carried over into the combustion chamber, where it becomes available. Under no circumstance can the use of steam cause a gain of heat, and the tendency will always be to chill the fire. The primary function of steam is to induce better gasifying conditions in the producer. In addition to the conservation of the heat losses in the process of gasification, the steam has a very desirable mechanical effect on the fuel bed, by softening the clinkers, preventing localized combustion and the fusing of the clinkers to the brickwork, keeping the fuel bed porous and homogeneous, and protecting the grate by keeping the intense combustion away from it.

TABLE IN

Effects of Temperature on Action of Steam

Temperature F.	Percentage of Steam Decomposed	Gas Analysis		
		CO_2	CO	H
1,245	8.8	29.8	4.9	65.2
1,750	70.2	6.8	39.3	53.3
2,057	99.4	.6	48.5	50.9

This table shows the importance of keeping the temperature of the combustion and decomposition zones near 2,000 degrees Fahrenheit, if satisfactory results are to be obtained.

The producer should be supplied with all the steam that it can decompose, in order to secure a high efficiency. This maximum quantity will vary with the nature of the raw fuel, with the type of producer, and with the method of operation. Excess of steam should be guarded against, as it will cool the fire and will produce a gas with a large amount of water vapor. This water vapor, on account of its high specific heat, will cause a large heat loss when the gas is burned.

Fuel. Practically every known solid fuel has been successfully used for the manufacture of producer gas. The purpose for which the gas is to be used, and the type of producer, will, however, determine what fuels may be used in each particular case. Since each fuel will give the gas certain definite properties, it is evident that the producer gas made from different fuels may vary perceptibly in composition. Thus, the producer gas made from bituminous coal will

be high in easily condensible hydrocarbons generally spoken of as "tar;" while that made from anthracite coal will have a low percentage of tar. Thus, some fuel with a certain type of producer might make a quality of gas that would give good results in a steel furnace; while this same gas might be worthless for use in a gas engine. Impurities in the raw fuel will in certain cases give the resulting gas certain constituents that would make it unfit for certain kinds of work. Thus, in burning certain ceramic products with producer gas made from fuel containing volatile sulphur compounds, ammonium salts, or other impurities, considerable difficulty may be experienced from the action that the gas may have on the particular product under treatment. The chemical reactions of the flame, and especially the volatile impurities, may have such a deleterious effect on the product being burned as to make the gas useless for such work. On the other hand, if a muffle-kiln—that is, one in which the combustion products do not come in contact with the ware that is being burned—is used, the impurities would not make any difference. This simply emphasizes the fact that no general rules can be laid down in regard to the kind of fuel to be used for all classes of work, but each individual case must be studied by itself.

The size and condition of the fuel are of considerable importance. A crushed coal will always give better results than coal with large lumps. When large lumps are placed on the fire, considerable time is required for the fire to disintegrate them, and they will always induce adverse gasifying conditions. Some run of mine coal is now being used in gas-producers; but it must be remembered that not all things that are possible are desirable. The use of fine dust, also, is not good practice. The fuel should be dry, since any moisture that it contains must be driven off in the producer, and this will cause a certain heat loss. Anthracite, bituminous and brown coal, peat, lignite, wood, sawdust, shavings, tanbark, and similar refuse, have all been used for making producer gas.

Nomenclature and Definitions. Several absurd terms have crept into use, probably due to the fact that the producer-gas industry is the result of the labors of many men covering a period of nearly three quarters of a century and working from different points of view. The prefixing of either the name or the type of the producer to the gas made therein, is positively wrong and should never be done. That

is, expressions like "Siemens gas," "Dowson gas," "Mond gas," and "suction gas" should never be used. In the first three examples, the name of the designer of the producer, and in the last one, the name of the type has been prefixed to the gas. The absurdity of this becomes evident when we use similar terms in connection with steam and steam boilers. For example, the steam made in a Stirling boiler would be called "Stirling steam;" and if a return tubular were used, the steam would be called "return tubular steam"—terms so absurd as not to need further emphasis. It was originally thought that each design or type of producer would make a gas with a certain distinctive quality. It is true that the gas made in different producers will vary in composition; but this variation is due to the method of operation or to the nature of the raw fuel used, rather than to the name or type of producer.

To avoid any further ambiguity, the following definitions are given, the close observance of which will save a large amount of trouble and misunderstanding:

A *pressure gas-producer* is one which has the blast introduced under pressure; this may be done either by a steam or a power blower.

An *induced-draft gas-producer* is one in which the resulting gas is induced away from the producer; the interior of the producer is kept at less than atmospheric pressure, and the air is forced in by the pressure of the outside air. The inducing action may be obtained by a chimney, steam ejector, gas-engine piston, or exhausting fan.

A *natural-draft gas-producer* is an induced-draft gas-producer in which the inducing action is accomplished by a chimney.

A *suction gas-producer* is an induced-draft gas-producer in which the inducing action is accomplished by a gas-engine piston. That is, the gas engine draws its gas directly from the gas-producer on the charging stroke of the engine. The term "suction gas-producer" has frequently been incorrectly applied to other types of producers.

A *water-seal gas-producer* is one which is so constructed as to have a seal of water between the interior of the producer and the atmosphere.

A *continuous gas-producer* is one that may be operated continuously for a long period of time. To secure this condition, the fuel must be introduced, and the ashes removed, in such a manner as not to interfere with the process of gasification.

An *automatic gas-producer* is one that is so constructed and operated as to keep automatically a fixed supply of gas stored in a holder.

A *down-draught gas-producer* is one that removes the gas from the bottom, and introduces the air-blast at the top of the fuel bed, and in this way causes the draught and the resulting combustion to go downward. The term *inverted-combustion* is also used synonymously for *down-draught.*

A *by-product gas-producer* is one that, in addition to the regular production of gas, makes one or more auxiliary products based on certain constituents of the raw fuel or resulting gas, constituents that generally would otherwise be lost.

An *underfeed gas-producer* is one in which the fresh fuel is fed into the bottom of the producer.

GASIFICATION LOSSES

Efficiency. Since producer gas is made by a partial combustion of the fuel itself, it is evident that there must always be a certain loss in the process of gasification; and, as a result, the efficiency of the gas-producer will always be less than unity.

$$\text{Efficiency} = \frac{\text{Heat units in gas from a unit weight of fuel}}{\text{Heat units in a unit weight of fuel}}.$$

With a properly designed and carefully operated gas-producer, the gasification loss should not be over 20 per cent; that is, the efficiency should be at least 80 per cent. Thus, if the fuel contained 14,000 B. T. U. per pound, and the gas evolved from a pound of that fuel contained 11,200 B. T. U., then the efficiency would be equal to $\frac{11,200}{14,000} = .8$, which is the equivalent of 80 per cent.

The heat energy in the gas will be of two forms—heat of combustion and sensible heat, by virtue of the temperature of the gas. Since the latter will be lost if the gas is cooled down to atmospheric temperature, it is evident that a gas-producer will have two efficiencies, depending upon whether the gas is used hot or cold. The former is called the *hot-gas efficiency,* while the latter is called the *cold-gas efficiency.*

Since the heat units in the gas can come only from the carbon actually gasified, evidently, if some carbon passes through the pro-

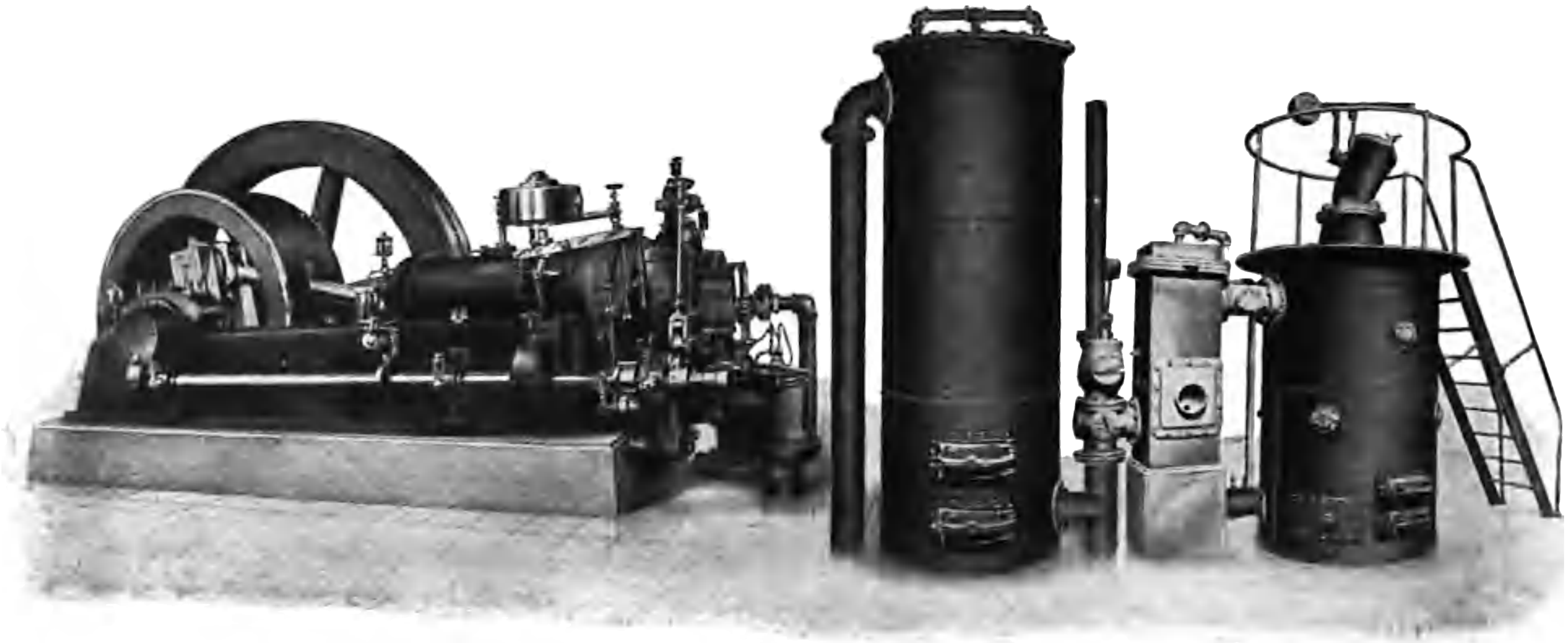

MUNZEL SUCTION PRODUCER GAS PLANT
Minneapolis Steel & Machinery Co., Minneapolis, Minn.

Purchase full membership to immediately unlock this page

HISTORY

Tens of thousands of important historical sources, many previously unobtainable, are now available for the first time with a Forgotten Books Full Membership.

Unlimited Access
$8.99/month

Continue

*Fair usage policy applies

If the test is conducted along the general lines just mentioned, the data obtained from it will be valuable in that it will show whether the producer is doing its best. In many cases, by making suitable changes, the efficiency of the producer can be materially increased.

Heat Losses. Usually there are eleven heat losses in the process of gasification. By judicious management, each of these may be reduced to a very small quantity. It is seldom possible to reduce any one loss to zero. The principal losses will now be given.

Sensible Heat Loss. This is the heat carried out by the gas by virtue of its temperature. If the temperature of the exit gases is 1,000 degrees Fahrenheit, this loss will amount to about 11 per cent. If the producer gas is high in hydrogen—on account of its high specific heat—the percentage of loss will be considerably higher. The sensible heat loss is large in nearly all forms of producers, and is a strong argument in favor of a form of construction for the producer whereby the gas is cooled before it leaves the producer, thus securing a conservation of this heat energy.

Carbon Dioxide Loss. The loss due to the formation of carbon dioxide is frequently high; in some cases this may amount to 10 per cent.

Heat Balance. In order to determine just what the various losses are, it is necessary to collect considerable data during the test. In order that such data shall be of value, it must be secured with a definite end in view. The easiest and most logical way to arrange it is in the form of a balance sheet. That is, the producer is charged with all the heat units delivered to it, and credited with every heat unit that is received from it. In other words, one should run a debit and credit account with the producer; if these are correct, the two sides will balance; that is, they will be equal to each other. The following arrangement of such a heat balance is taken mainly from the author's treatise on *Producer Gas and Gas-Producers:*

Debit Side	Credit Side
To heat per pound of fuel	By heat per pound of fuel
Calorific pound of fuel	Calorific power of gas
Heat in air-blast	Evolved in formation of CO
Heat in steam-blast	Evolved in formation of CO_2
	Absorbed in decomposing steam
	Lost in ashes
	Lost in unburned carbon
	Lost in tar and soot
	Lost in sensible heat of gas
	Lost in heating undecomposed steam
	Lost in evaporating moisture in fuel
	Lost in volatilization of hydro-carbons
	Lost in radiation
Sum of debits =	Sum of credits

The classification of all the losses in a balance like the one just given will show at a glance where any heat unit goes. If any loss is high, it will suggest certain changes in the construction or operation of the producer which will make it possible to curtail the loss in question. There are a large number of producers now in operation where certain heat losses are high; and in many cases this useless waste could be reduced materially by the application of this heat balance to locate the difficulty, and subsequently the utilization of engineering skill to remedy it.

RULES

Specific Heat of Producer Gas. To determine the specific heat of producer gas, multiply the amount of each constituent present by its own specific heat as given in Table II, page 3, and divide the sum of the products so obtained, by 100. The result will be the specific heat per cubic foot of the particular gas in question.

Weight of Producer Gas. To determine the weight per cubic foot of producer gas, multiply the amount of each constituent present by its own weight per cubic foot as given in Table II, page 3, and divide the sum of the products so obtained, by 100. The result will be the weight per cubic foot of the particular gas in question.

Specific Gravity of Producer Gas. To determine the specific gravity of producer gas, first determine the weight of the gas per cubic foot. Then,

$$\frac{\text{Weight per cu. ft.}}{.0807^*} = \text{Specific gravity with reference to air.}$$

*Weight of air per cubic foot.

Calorific Power of Producer Gas. To determine the calorific power of producer gas, multiply the amount of each combustible constituent present by its own calorific power per cubic foot as given in Table II, page 3, and divide the sum of the products so obtained, by 100. The result will be the calorific power per cubic foot of the particular gas in question.

CLASSIFICATION OF GAS-PRODUCERS

All gas-producers may be classified into the following groups:

1. Pressure.
2. Induced-draught.
   (a) Draught induced by a chimney.
   (b) Draught induced by an exhauster.
   (c) Draught induced by a gas-engine piston—that is, a suction gas-producer.

REPRESENTATIVE TYPES OF GAS-PRODUCERS

Pressure Types. The Amsler gas-producer is shown in Fig. 5. A is the body of the producer, with charging hopper B, and gas-exit C. D is a side poke-hole, to facilitate the breaking of climbers which may adhere to the side wall. E is a steam blower which is connected to the central blast-chamber G, by the pipe F. H is the blast opening. The cross-section of the producer is circular.

The Duff gas-producer is shown in Fig. 6. The main features of this are an inverted V-shaped grate in the middle, which extends from one wall to the other, vertical openings in this grate so as to give the blast a vertical direction, and a rectangular cross-section for the producer. The usual form of water-seal ash-pan is used.

The Swindell gas-producer is shown in Fig. 7. H is a charging hopper; N is the gas-exit; G is an inclined grate; C is a cleaning door. The blast is introduced by the usual form of steam blowers, although these are not shown in the illustration, and enters the ash chamber by the pipes S. A P is the usual form of water-seal ash-pan. A careful inspection of this producer and the ones shown in Figs. 5 and 6 will reveal a marked similarity in principle of grate construction. The Duff gas-producer has an inverted V-shaped grate of rectangular

cross-section; the Amsler gas-producer has an inverted V-shaped grate of circular cross-section; and the Swindell gas-producer has a V-shaped grate.

The Forter gas-producer is shown in Fig. 8. A is the main body of the producer and has a gas-exit B. C is the usual form of

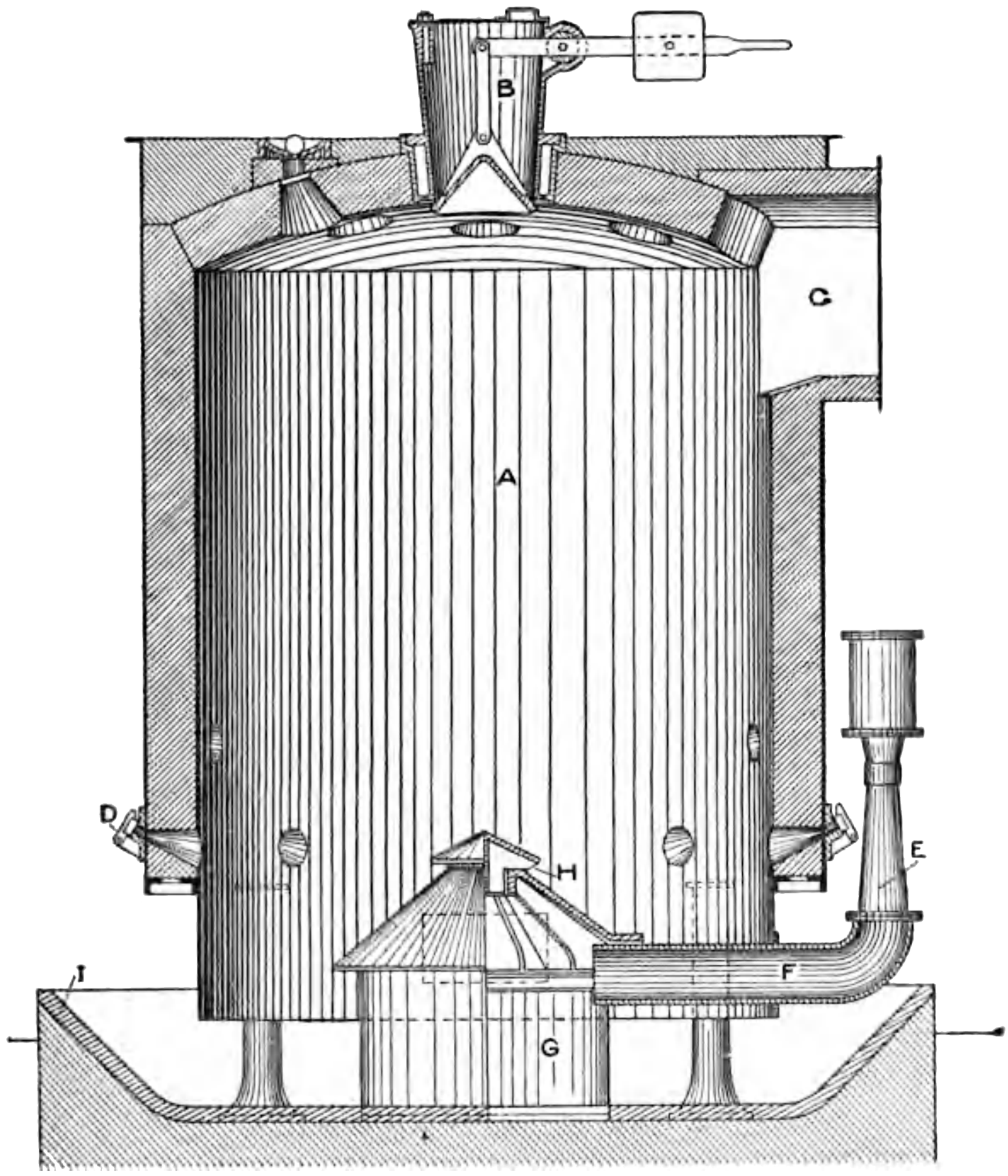

Fig. 5. Amsler Gas-Producer.

charging hopper, while D is a poke-hole. E is a leg for supporting the producer. F is an inclined bosh wall which has the blast-chamber G. H is an opening for the blast to pass from G to A. I is a door for cleaning G. K and L are steam blowers. M is the central blast pipe with hood N. J is side poke-hole.

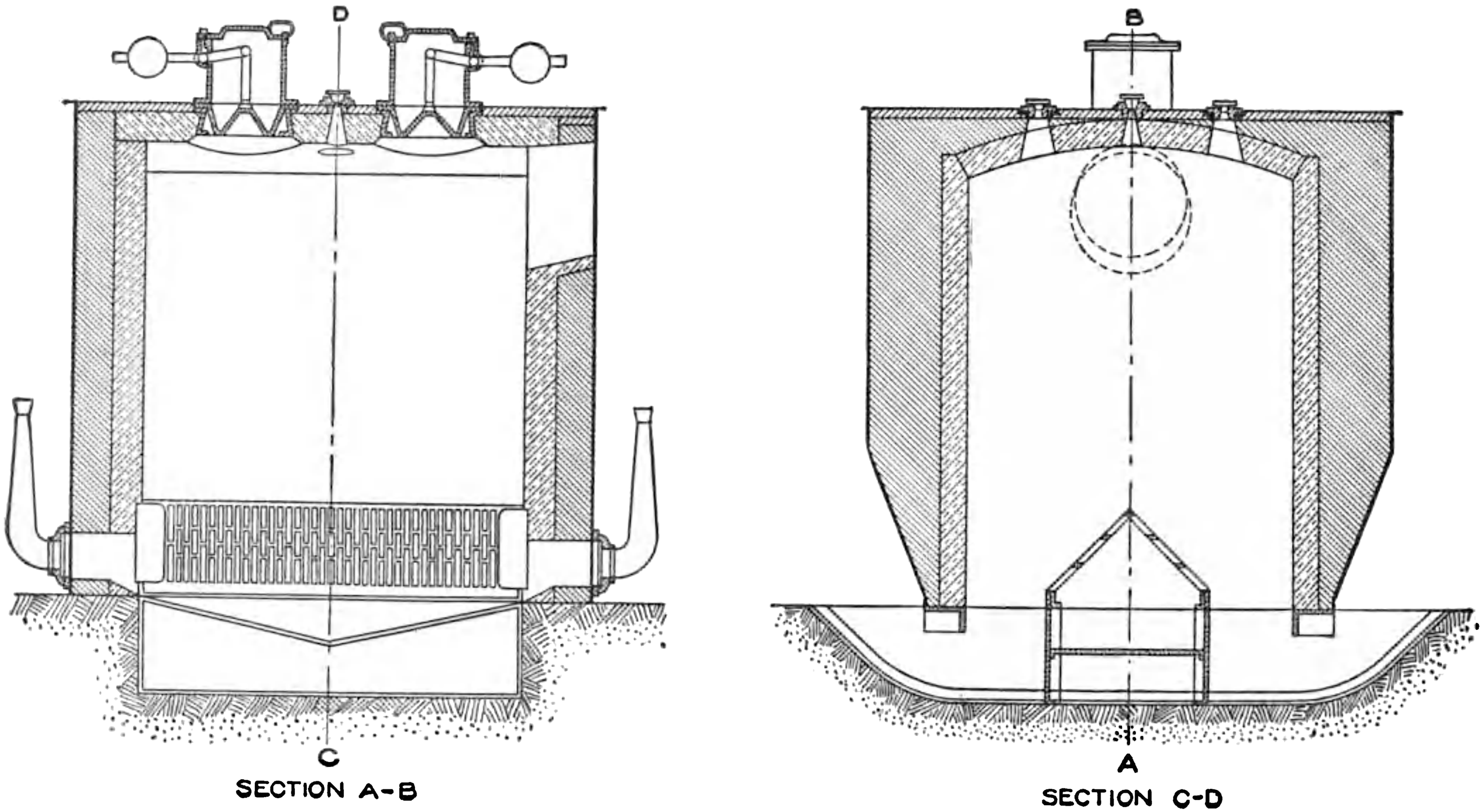

Fig. 6. Duff Gas-Producer.

The Fraser and Talbot gas-producer is shown in Fig. 9. In construction and method of operation this producer differs radically from the usual practice. The poking of a gas-producer is very laborious, and men will usually shirk it whenever possible. The primary object of this producer is to eliminate the hand-poking entirely. A is a central shaft that is operated by motor B. In addition to a slow

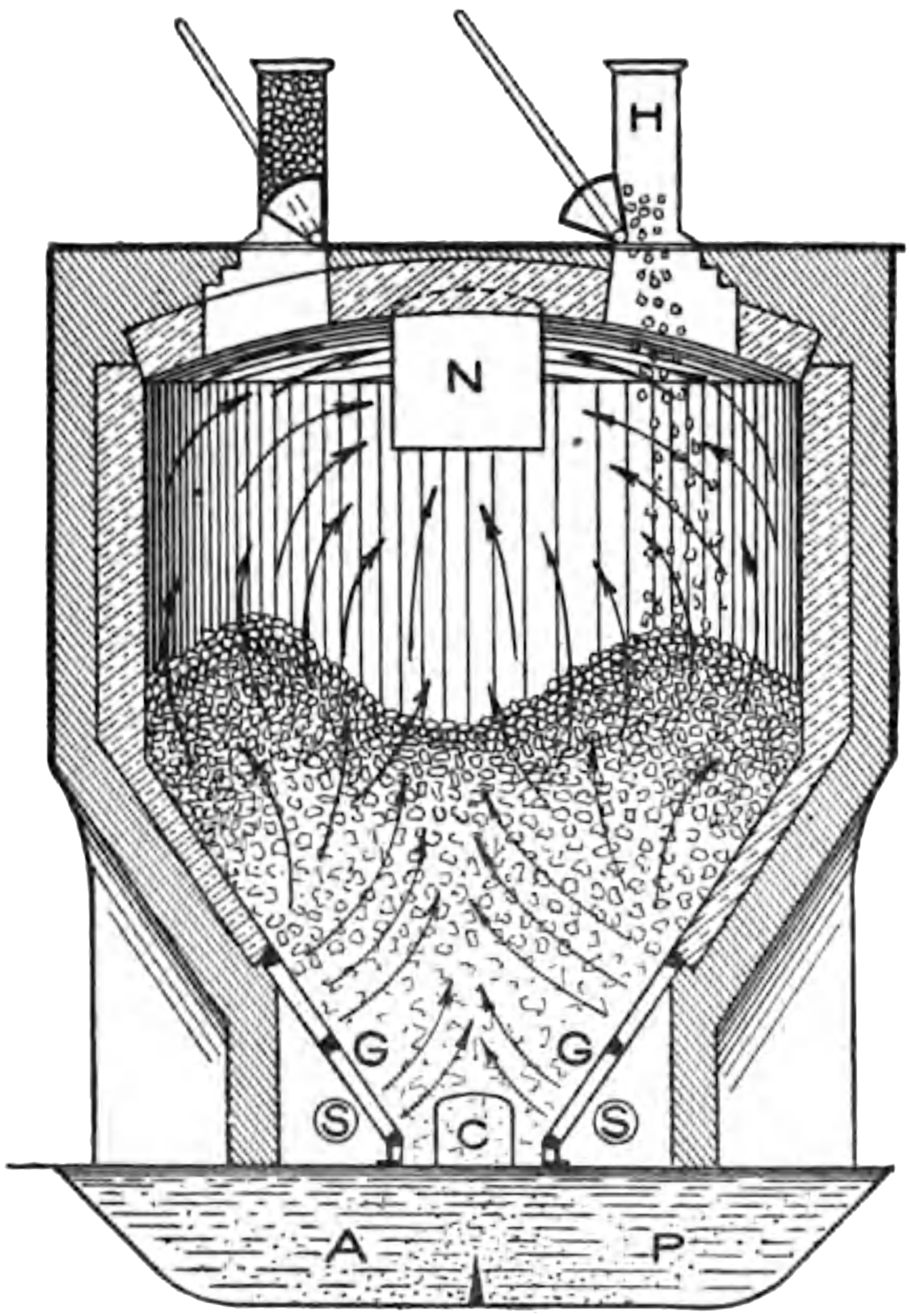

Fig. 7. Swindell Gas-Producer.

rotary motion, A is also given an up-and-down motion by crank C and connecting rod D. E is a water- or steam-cooled poking-arm that is fastened to A. The upper position of E is indicated at F. H is a frame for supporting the driving mechanism. I is the blast pipe which is supplied with air and steam by a blower on the outside. J is a bosh plate, and K is the bottom of the water-seal ash-pan. L is

a coil spring so arranged that if E should strike a hard clinker, it will allow the poking arm to slide past it. In this way the danger of

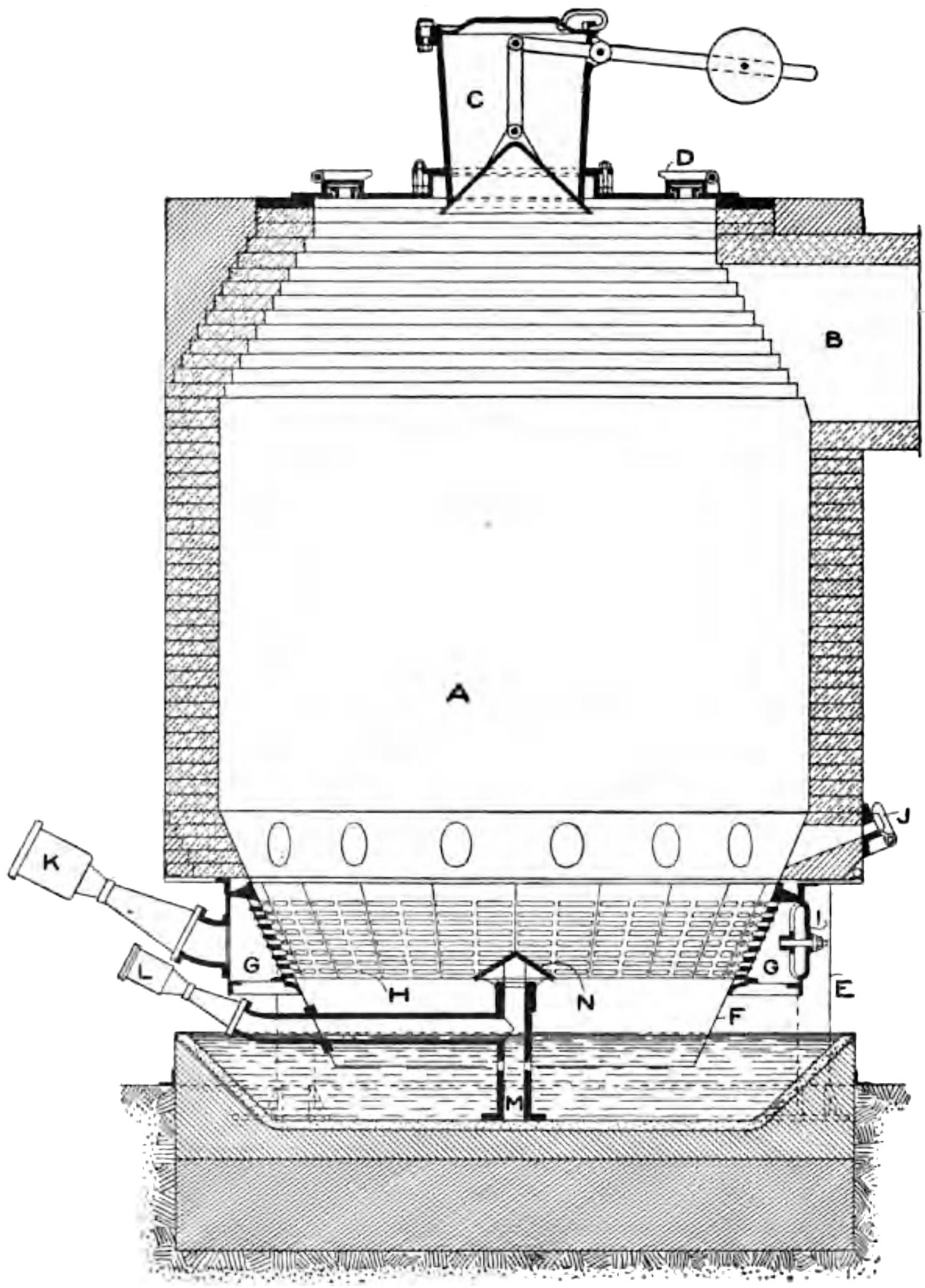

Fig. 8. Forter Gas-Producer.

the breakage of E is in a large measure eliminated. M is an ordinary charging hopper. By means of the rotary and up-and-down motion

Purchase full membership to immediately unlock this page

DELVE INTO FANTASY, MAGIC, MYTHOLOGY & FOLKLORE

Forgotten Books' Full Membership gives access to 797,885 ancient and modern, fiction and non-fiction books.

Continue

*Fair usage policy applies

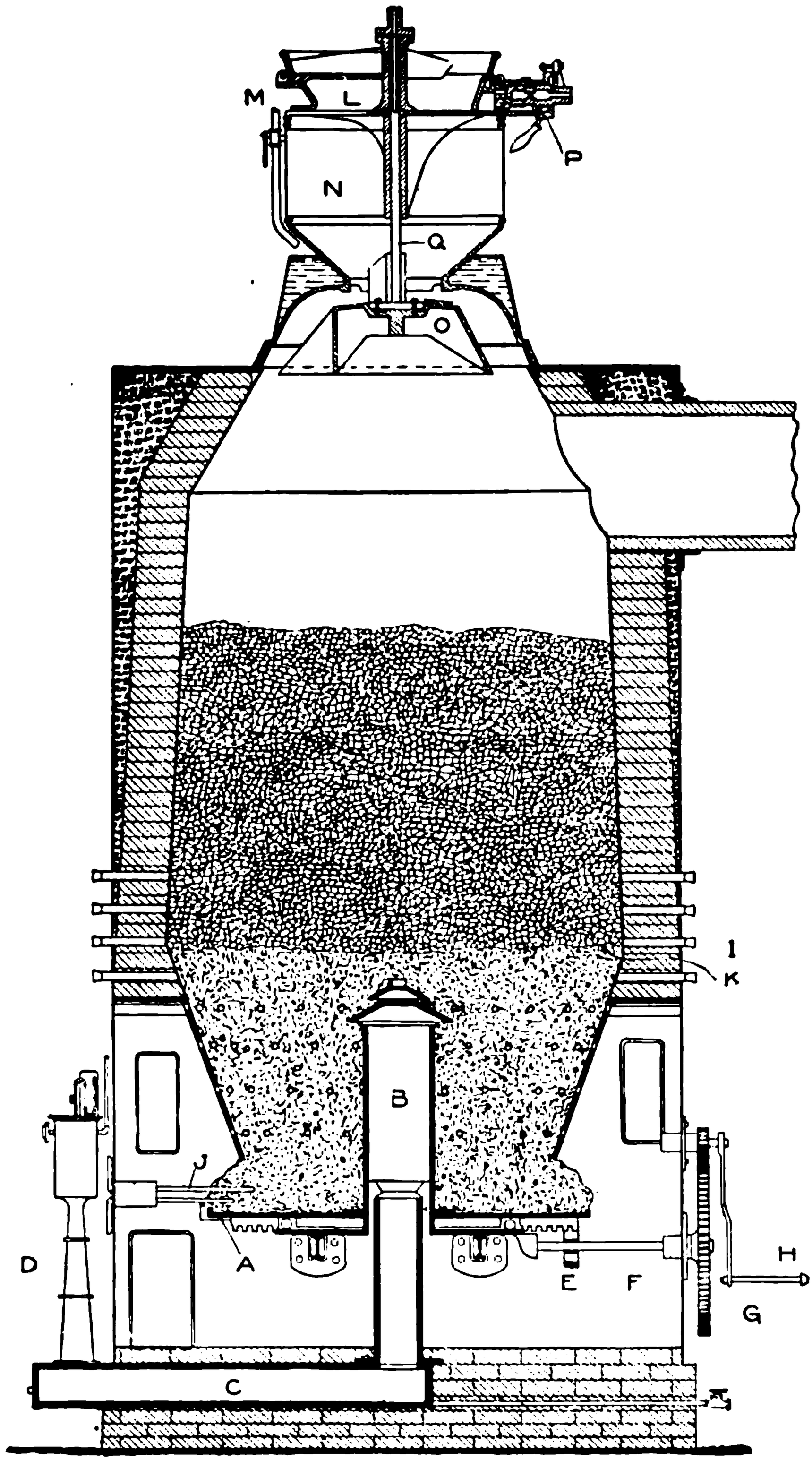

Fig. 10. Taylor Gas-Producer.

of E, a very thorough agitation of the fuel bed is secured without any hand labor.

The Taylor gas-producer is shown in Fig. 10. The essential features of this producer are a revolving grate, the use of a thick bed of ashes to prevent the burning out of the grate, and a high, central blast pipe which introduces the blast at the upper surface of the ash bed. The producer is equipped with the Bildt automatic feed, which introduces the coal in a thin, continuous stream and that without any hand labor. A is the circular grate that revolves around the central blast pipe B. C is a pipe connecting B with the steam blower D. E is a pinion on shaft F, that has the gear teeth which mesh with E, and by turning H, A will be revolved. I is a peep hole for observing the height of the ash-bed. The division between the fuel and ash-bed is shown at K. J is a finger which drags the ashes off of A as it is rotated. The Bildt automatic feed consists essentially of a hopper L into which the coal is primarily deposited, a register valve M, which controls the amount of coal going to the tank N below, and a rotating disk O. This disk has sloping sides of varying angles and is so designed as to deposit the coal evenly over the charging area. O is rotated by means of a special ratchet motion P and the vertical shaft Q. The coal is supplied to the hopper L by any convenient means and dropped into the storage tank N as needed. The tank N may be made of considerable capacity, but three hours supply is usually enough. The disk O has a slow, rotating motion and causes the coal to work out of N and fall over the edge of O. The speed of O is from 1 to 15 revolutions per hour, the different speeds being obtained by the ratchet P.

The section of the Morgan gas-producer fitted with a George automatic feed is shown in Fig. 11. The automatic feed consists essentially of coal tank and a revolving eccentric chute which spreads the coal out over the surface of the fuel as shown in the illustration. The steam blower is placed in a horizontal position as is shown in the lower left-hand corner of the illustration. Fig. 12 shows the operating floor of a battery of 52 Morgan gas-producers. A small, auxiliary coal tank is placed over and above the feeding mechanism of each producer. These tanks are filled by means of the large tank shown on the traveling crane. The plant is a good example of what may be done in the way of using labor-saving devices in a gas-producer

installation. Inasmuch as every pound of coal that is used in these 52 producers is handled by mechanical means, it can be seen at once that the labor cost will be very low. Further, gas-producers that are equipped with some form of automatic feeding device will make a more uniform quality of gas and will also usually be more efficient.

The Smythe gas-producer is shown in Fig. 13. This is a radical departure from the usual type of gas-producer in that the grate is

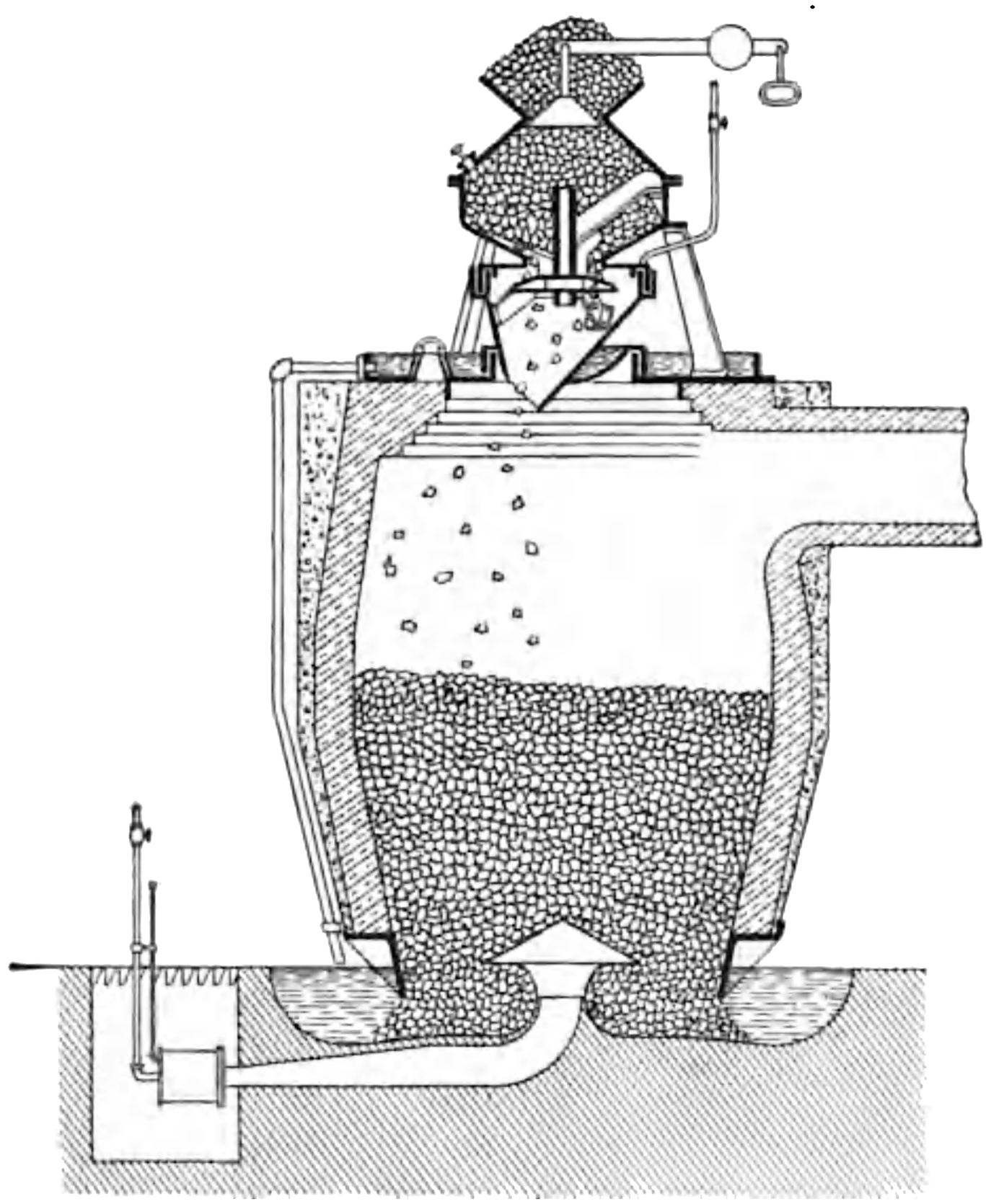

Fig. 11. Section of Morgan Gas-Producer Fitted with George Automatic Feed.

made entirely different. A is the main body of the producer with charging hopper B, poke-hole C, and gas-exit D. E is an inclined grate so positioned as to cause the ashes to work down to the lower left-hand corner of the producer and then down into the water-seal ash-pan below. The steam is introduced at a higher point than usual, and in this way it at once comes in contact with the incandescent fuel.

The Poetter gas-producer is shown in Fig. 14. The main feature in this is the use of a device to effect the destruction of the tar in the

producer and make a gas with no condensible constituents. A is a retort which is supplied with fresh coal by means of the charging hopper B. The upper end of A is in communication with the ash-zone below by means of pipe C. The blast is introduced at D. E is a water-seal ash-pan, and F is the gas-exit. As the gas is given off from the surface of the fuel, it heats A and the fuel contained therein. A large part of the volatile matter or tar in the coal contained in A will be given off as vapors and then pass out through C and come up

Fig. 12. Operating Floor of Morgan Gas-Producer.

through the fuel bed. When these vapors come in contact with the incandescent fuel they will be converted into fixed gases, thus eliminating all trouble from condensation after the gas leaves the producer. This type of producer will give good results when using a coal that contains a large amount of tar, and under those circumstances will make a gas suitable for gas engine use.

The Duff-Whitfield gas-producer is shown in Fig. 15. The main object of the new features in this producer is to secure the destruction of the tar in the producer itself. The unique feature is the circulation of the gases through different parts of the producer. The

blast is introduced under the Duff grate A. B is the usual charging hopper, and C is the water-seal ash-pan. The gas-exit is at D. E is a small steam-blower which draws the gases given off from the surface of the fuel away at F and delivers them at the lower part of the fuel bed through opening G. H is a small steam-blower which draws off the gases from the space near the fuel surface by opening I, and delivers them through J at the bottom of the fuel bed. In each case the green gases taken from or near the surface of the fuel

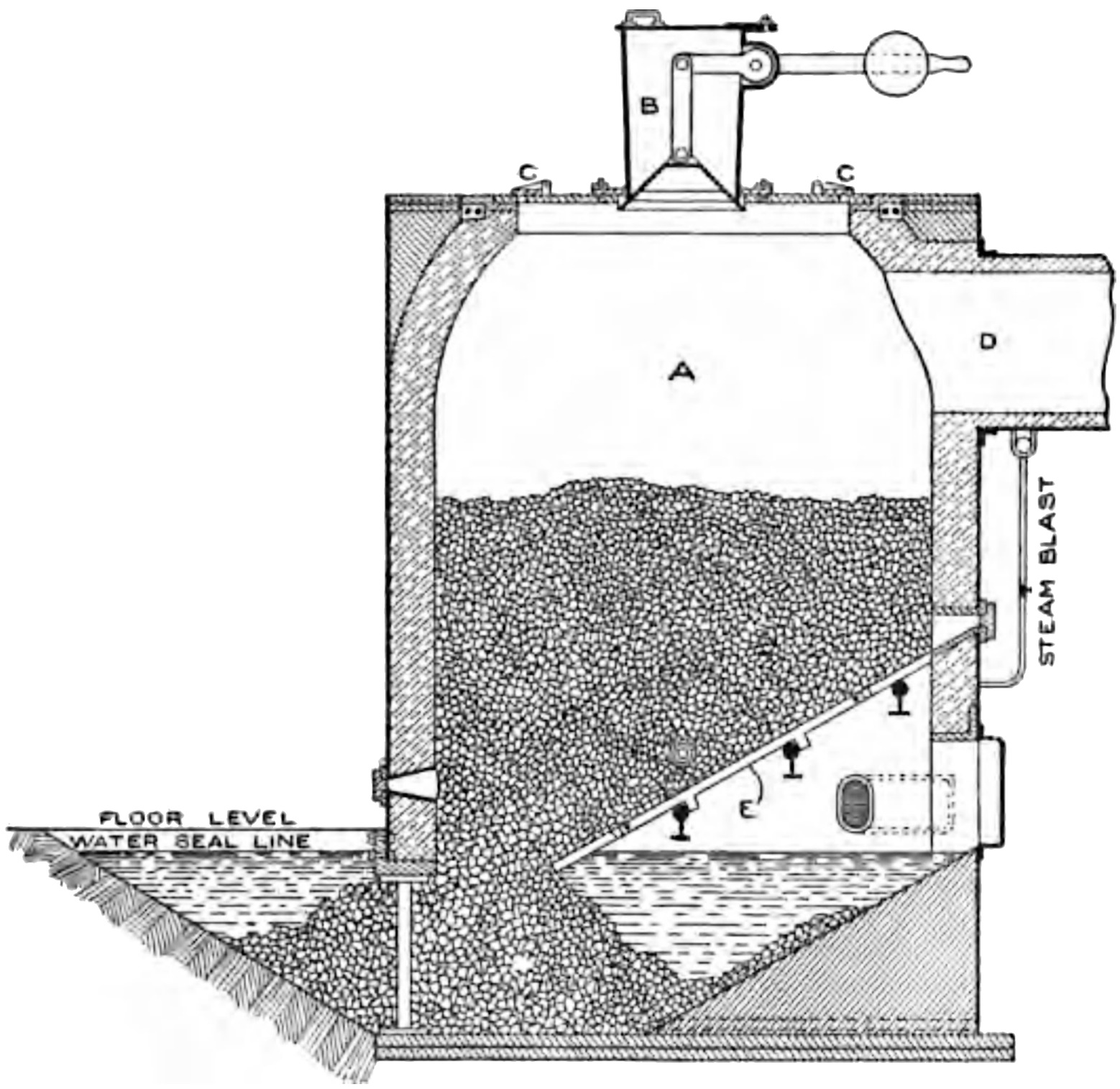

Fig. 13. Smythe Gas-Producer.

are forced up through the incandescent fuel and in this way they are converted into fixed gases. Since the producer secures the destruction of the tar, it is obviously well adapted to make a clean gas from fuel containing large amounts of tar.

Induced-Draft Gas-Producers. The Loomis induced-draft gas-producer is shown in Figs. 16 and 17. Under certain conditions this producer may also be used with pressure. The producers are generally installed in pairs. The producer A is shown in section, while pro-

ducer B is shown in elevation. The two are connected at the top by the pipe C. D is a vertical, tubular boiler which acts as an economizer by abstracting some of the sensible heat in the gas. E and F are water-cooled valves connecting the bottom of D with B and A. G is an exhauster driven by engine H. K is a tower scrubber with a series of shelves M upon which is placed a layer of coke. L is a pipe connecting D and K, and I connects K with G. Q is a cleaning door for removing the coke from M. N and O are strain pipes for admitting steam under the fire in A and B. P is a door for charging the producers with fuel. R is a seal. S and T are delivery pipes. S goes to the producer-gas holder, and T to the atmosphere. As water-gas may also be made in this producer under certain conditions, another pipe is sometimes placed on R and is used to deliver the water-gas to the water-gas holder. The operation is as follows: The exhauster G being in operation and the valves E and F and doors P open, the air will enter at P and produce a down-draft combustion in A and B; the resulting gas will pass down and out through E and F, up through D, over to the bottom of and then up through K, out through G and then go to the mains or gas holder. Another way is to have the ash-pit door U open, doors P and valve F closed, then the air will enter at U, pass up through A, and the resulting gas will pass over to B by pipe C, and then pass downward through the fuel bed in B, then out through E and up through D. By either method it is

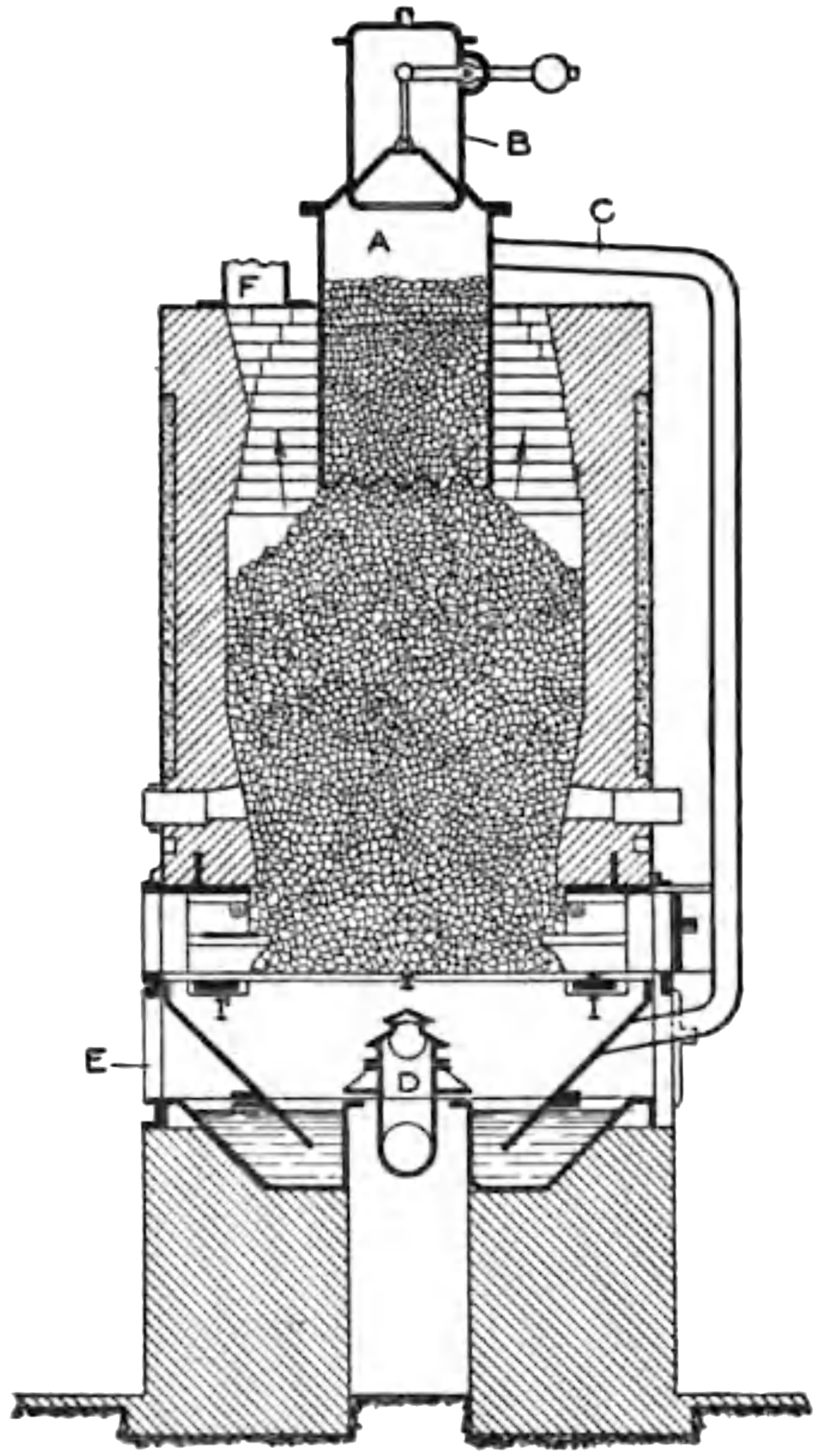

Fig. 14. Poetter Gas-Producer.

evident that all the volatile or easily condensible matter given off from the fresh coal must come in close contact with the incandescent fuel in the middle of the producer, and, as a result, the tar is broken up and converted into fixed gases. In making water-gas the fuel is first brought to the proper temperature by blasting with air and making producer gas; then steam is admitted and water-gas is made

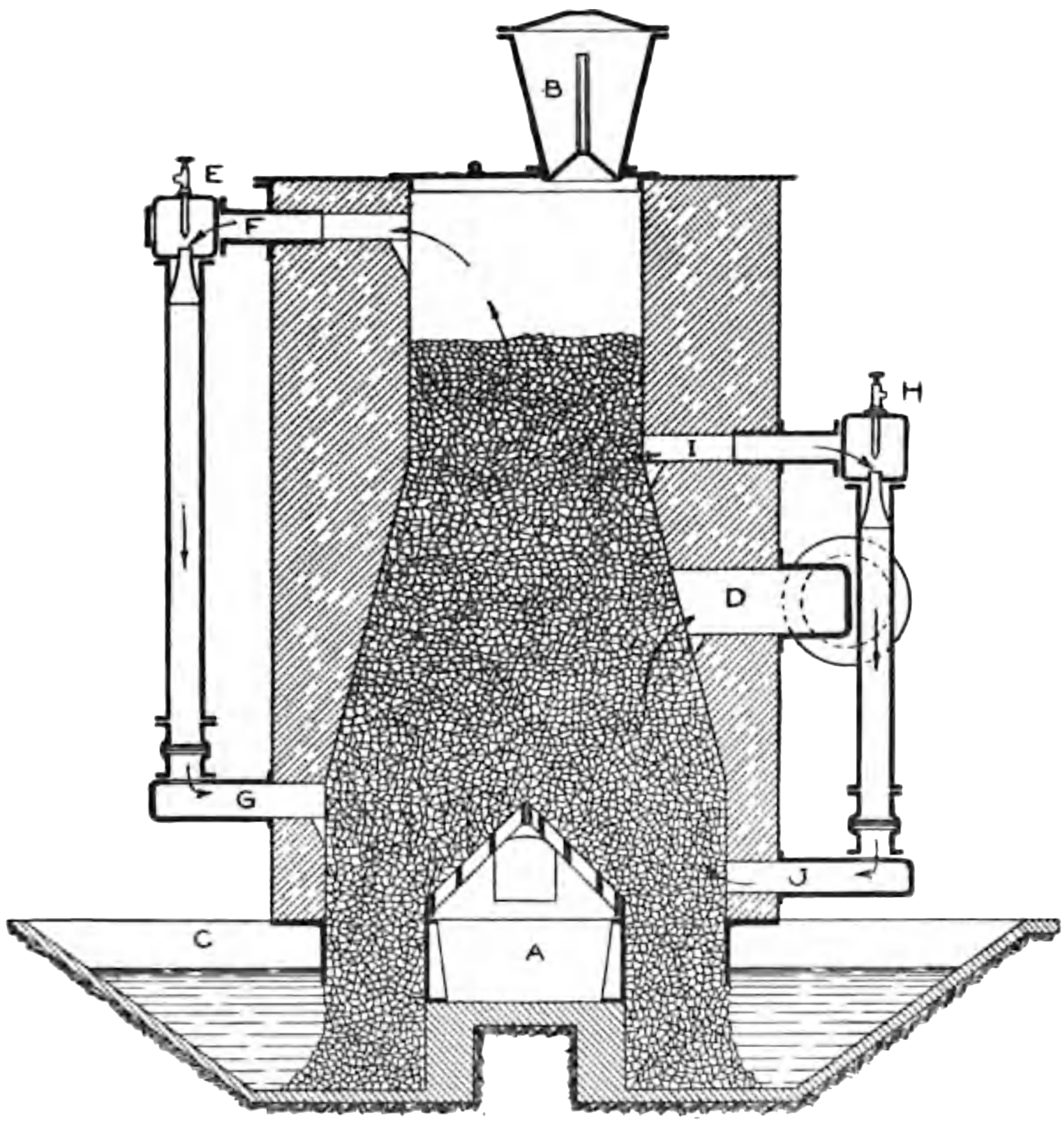

Fig. 15. Duff-Whitfield Gas-Producer.

for several minutes. When the fire becomes chilled the steam is shut off and the temperature is again raised by making producer gas.

The Capitaine underfeed gas-producer which is operated by induced draft is shown in Fig. 18. The coal is introduced at A and is then fed over to the center of the producer by spiral conveyor B which delivers the coal to the vertical spiral conveyor C; this, in turn, screws

Purchase full membership to immediately unlock this page

HISTORY

Tens of thousands of important historical sources, many previously unobtainable, are now available for the first time with a Forgotten Books Full Membership.

Unlimited Access
$8.99/month

Continue

*Fair usage policy applies

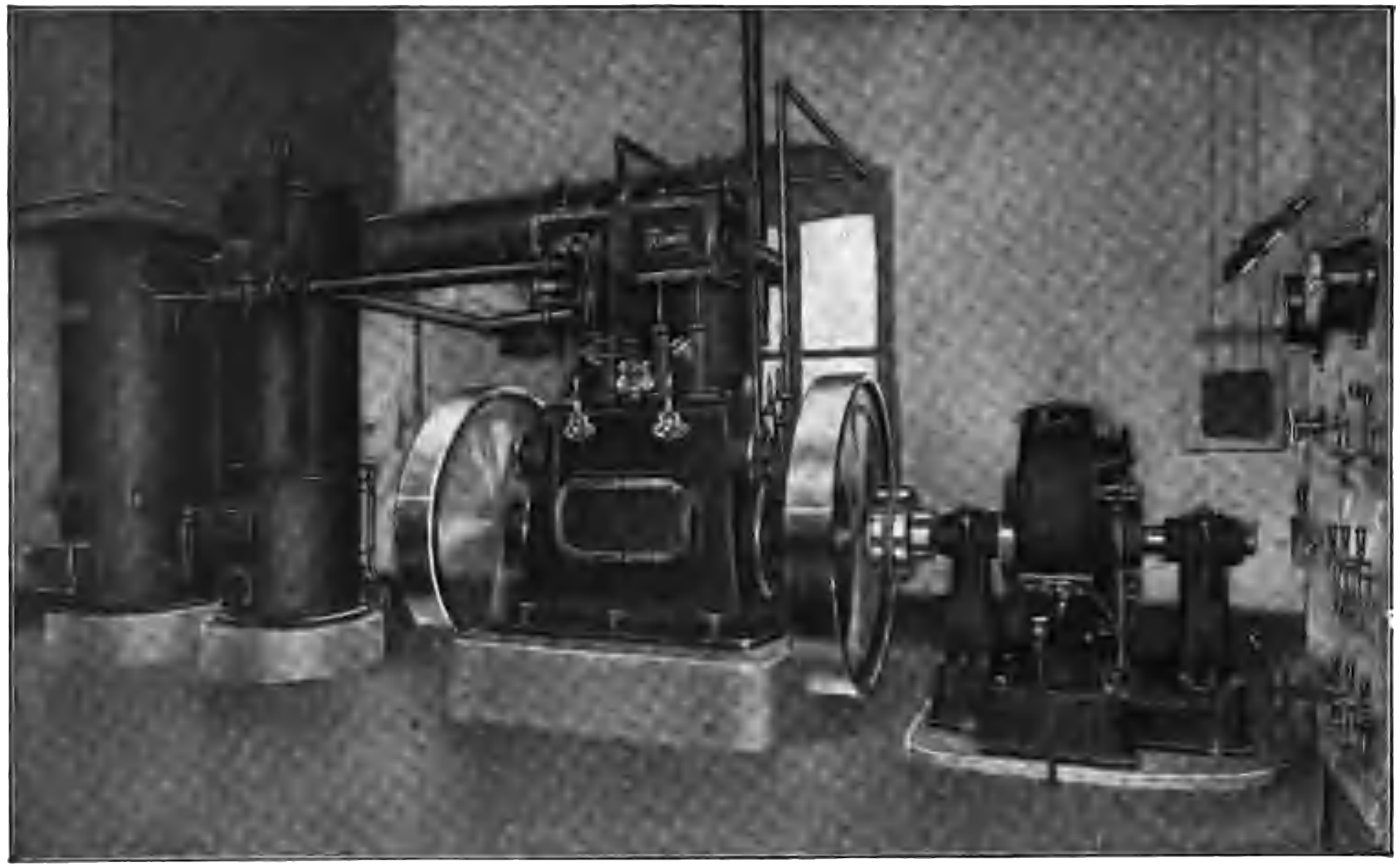

COMPLETE PRODUCER-GAS ELECTRIC LIGHT AND POWER PLANT FOR SMALL INSTALLATIONS
Weber Gas Engine Co., Kansas City, Mo.

the coal up into the center of the fuel bed. The ashes are worked out through grates D, while the gas is withdrawn at E. The primary object of this design of gas-producer is to introduce the fuel in such a manner as to secure a slow agitation of the fuel bed and also compel the volatile products of the green fuel to pass up and through the mass

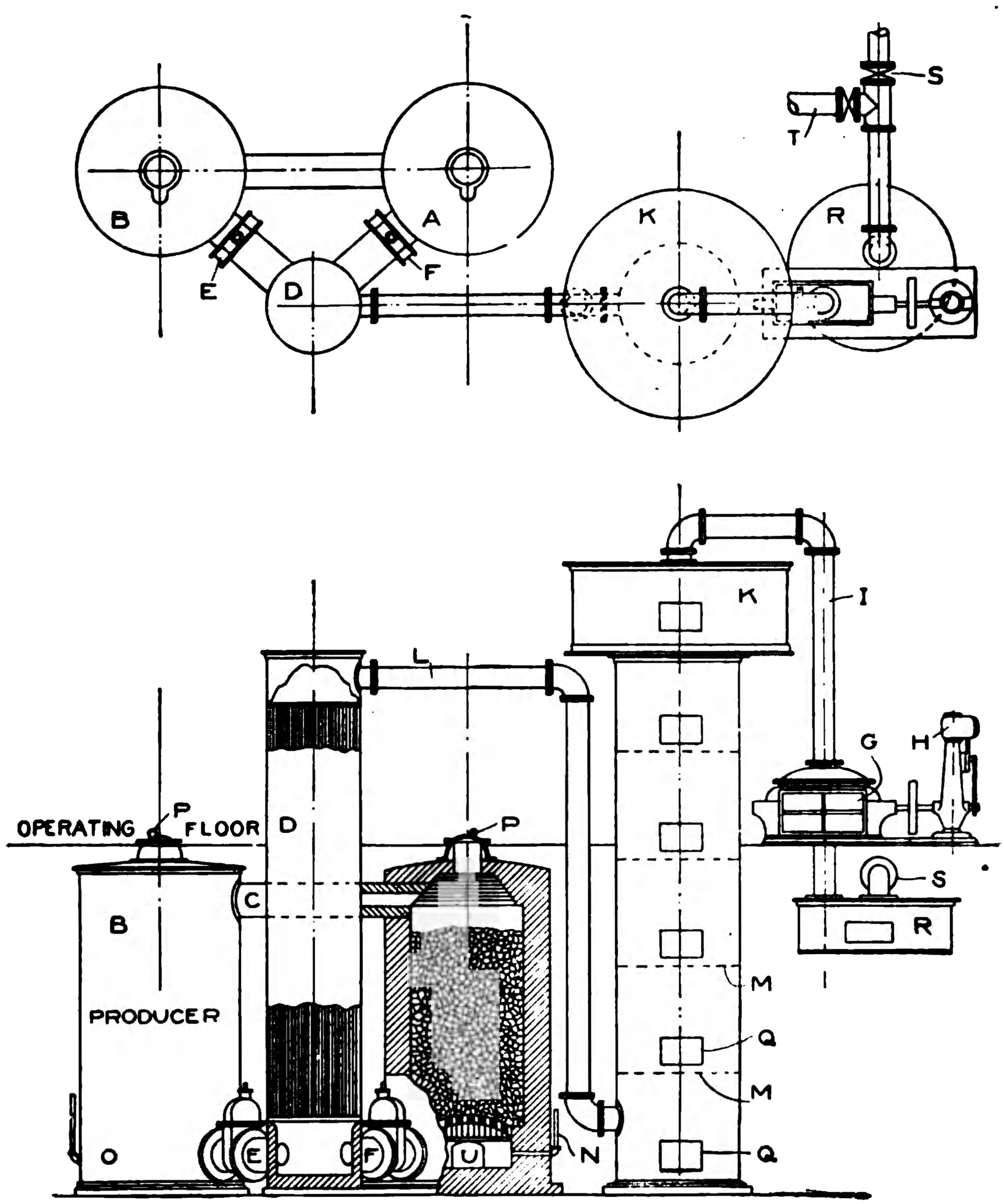

Fig. 16. Loomis Induced-Draft Gas-Producer.

of superimposed incandescent fuel; in this way the volatile matter will be converted into fixed gases. By comparison with Fig. 2 it will be seen that the distillation zone is under the fuel bed in Fig. 18.

Suction Gas-Producers. These are used entirely for power purposes—that is, for furnishing gas to gas engines. The chemical

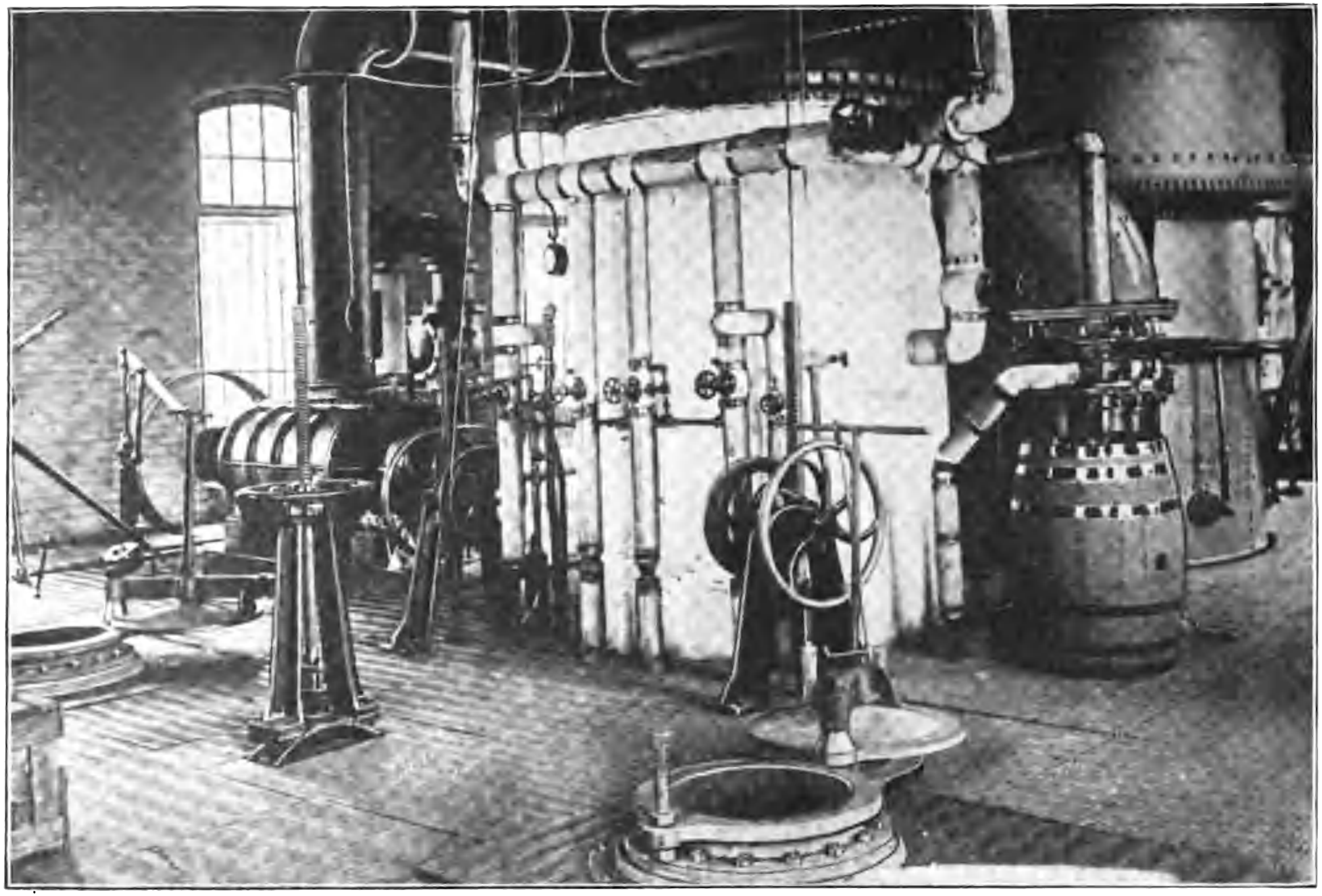

Fig. 17. Operating Floor of Loomis Gas-Producer.

reactions that take place in the manufacture of the gas are the same as for the pressure type of producer. The construction of the suction gas-producer is usually quite different from that of the other types. The two most desired requirements for suction gas-producers are that they shall be *compact* and *self-contained.* As a result each suction producer has its own steam generating apparatus. This

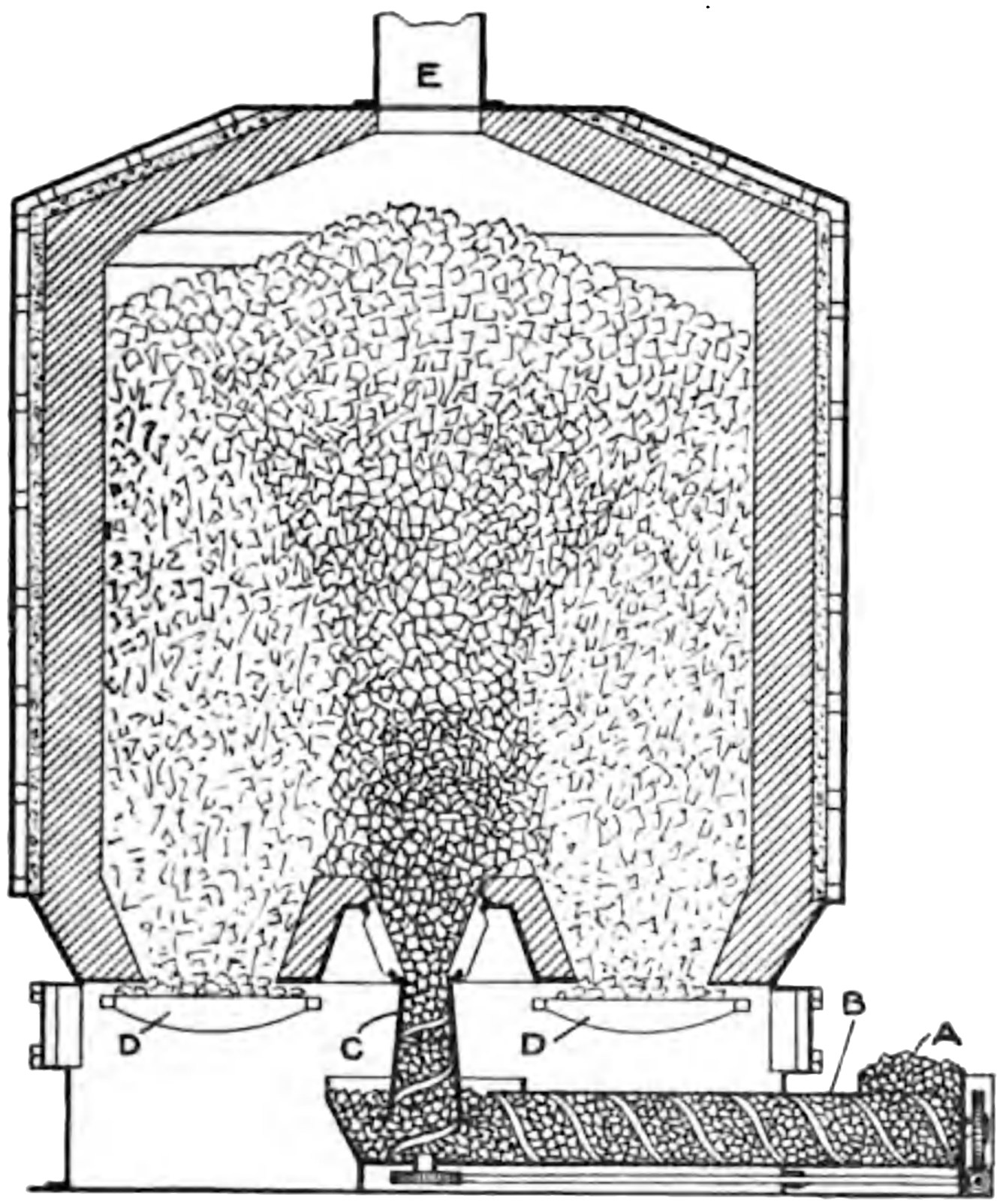

Fig. 18. Capitaine Underfeed Gas-Producer.

apparatus is usually spoken of as a vaporizer, and there are three general ways of using these vaporizers.

First—To have the vaporizer an integral part of the producer, as shown in Fig. 19.

Second—To have the vaporizer attached to the side of the producer, as shown in Fig. 20.

Third—To have the vaporizer entirely separate from the producer as shown in Fig. 23. In the first two cases the water is vaporized by means of the sensible heat in the gas as it leaves the producer; in the last case the sensible heat of the engine exhaust gases is used;

this may be made to return about 10 per cent of heat back to the producer. Inasmuch as the gas must be cleaned before going to the engine, some form of scrubbing apparatus is always used between the producer and the engine. In order that this scrubbing device may be kept simple, practically all suction gas-producers are operated

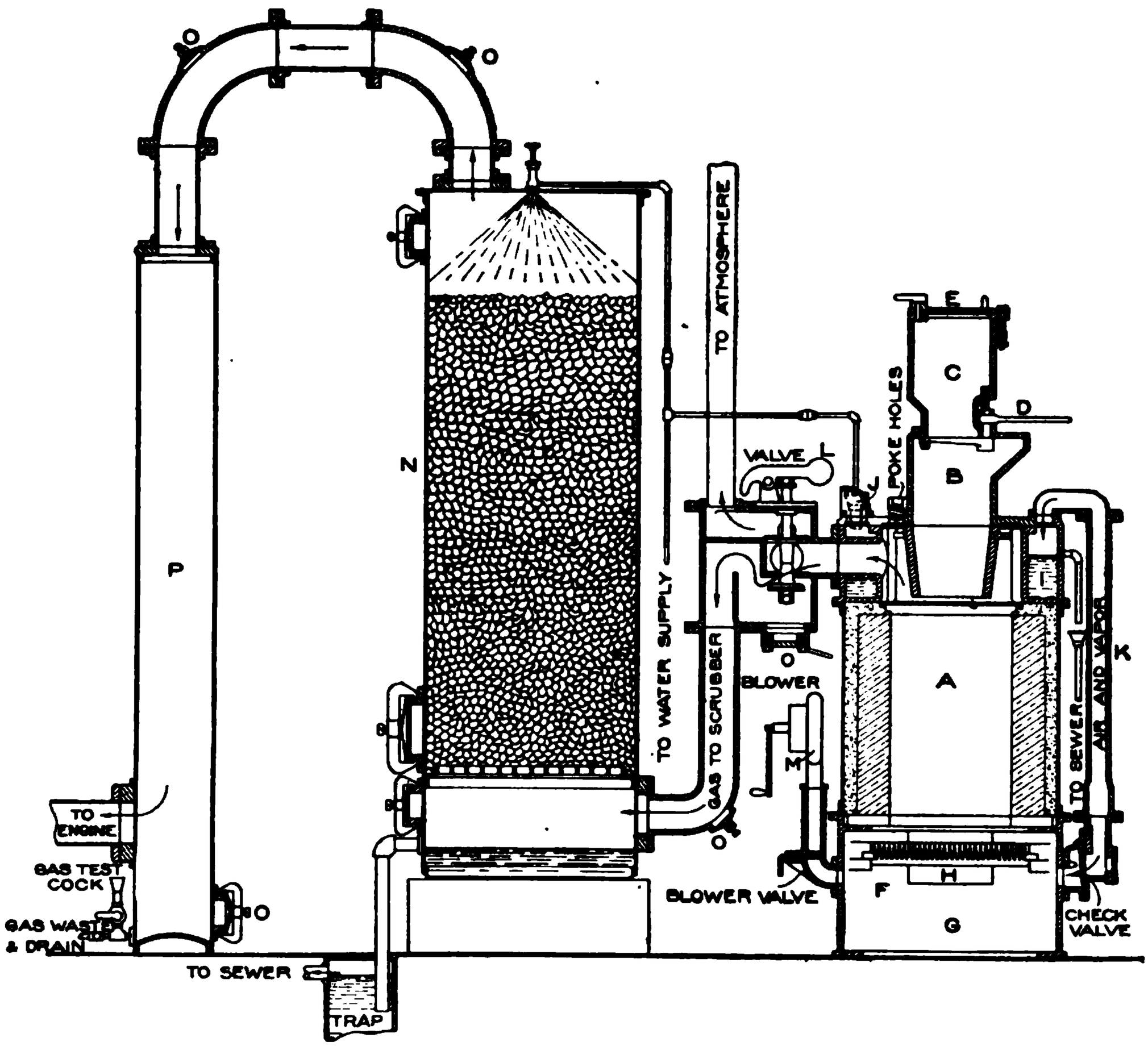

Fig. 19. Fairbanks-Morse Suction Gas-Producer.

on anthracite coal, which produces very little tar; as a result, the work of the scrubber is generally limited to the removal of fine dust only.

The Fairbanks-Morse suction gas-producer is shown in section in Fig. 19. A is the body of the producer with fuel magazine B, hopper C, fuel valve D, and hopper cover E. F is a grate bar over ash-chamber G. H is the ash-door. I is the vaporizer with air inlet J. K is a pipe connecting I with G. O is a hand-hole cover which may be removed either for inspecting the interior of the pipe or

for the removal of dirt. L is a valve lever and weight. M is a hand-blower that is used in starting the fire and blasting it up to such a point that the gas evolved will be of the proper quality to use in the engine. N is a scrubber filled with coke and supplied with a spray of water at the top; as the gas comes up through the interstices of the columns of coke it comes in close contact with the water that is trickling down, and, as a result, the fine dust carried by the gas is washed down to the bottom. P is a storage tank placed near the engine. The test cock at the bottom of P is used to test the quality of the gas before starting the engine.

The method of starting a suction gas-producer will now be given. The reference will be made to the producer just described, but the principles may be applied to any other producer. First see that the vaporizer is supplied with water and that the valve under L is open to the atmosphere. To open the valve it will be necessary to turn L over 180 degrees from the position shown in the illustration; then the lower disk on the valve stem will come up against its seat, closing the passage to the scrubber, and the upper disk opening the one to the atmosphere. Place some easily inflammable material, such as oily waste or pine kindling on the grate; set fire to this and add a little coal, in the meantime keeping the ash-door open so as to produce a natural draft. Just as soon as the fire is started nicely, add more wood and coal. Close the ash-door and begin blowing the fire very slowly with the hand-blower. Care is necessary at this point or else the fire will be killed by an excessive blast. As the combustion progresses add more fuel and increase the intensity of the blast. This period of preliminary blowing will usually require about twenty minutes, and the combustion products are sent out to the atmosphere. At the end of twenty minutes, turn L back to the position shown in the illustration. A valve should be placed near the engine so that the gas may be by-passed to the exhaust pipe; have this valve open and then purge out the scrubber and pipes between the engine and the producer by further blowing the producer with the hand-blower and forcing gas out through the valve just mentioned. The quality of the gas may be judged by opening the test cock and lighting the gas. If it burns with a pale blue flame the gas is not rich enough for use in the engine and the blowing must be continued. As soon as the gas burns uniformly with an orange-colored flame, the blowing may

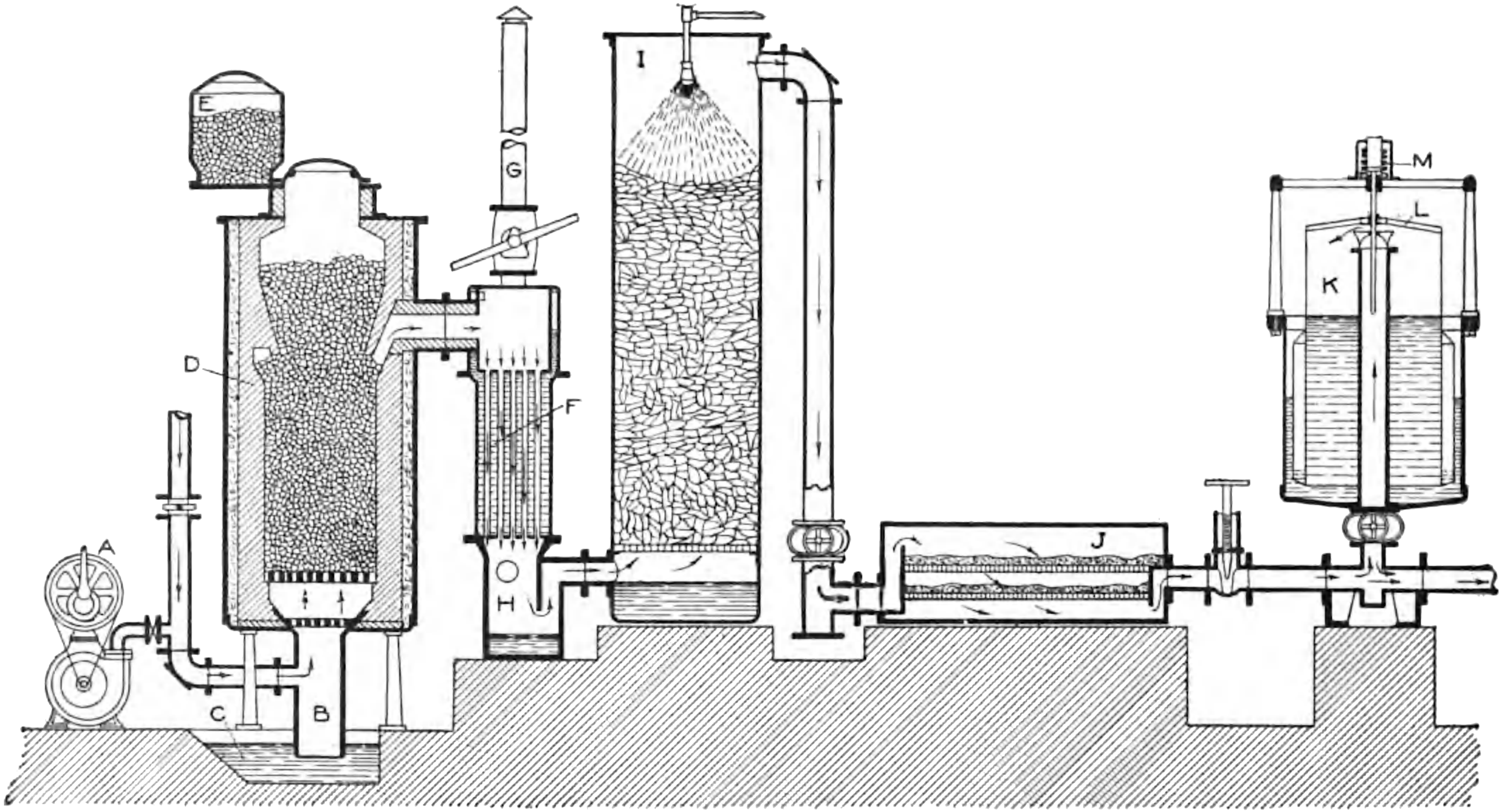

Fig. 20. American Suction Gas-Producer.

Purchase full membership to immediately unlock this page

DELVE INTO FANTASY, MAGIC, MYTHOLOGY & FOLKLORE

Forgotten Books' Full Membership gives access to 797,885 ancient and modern, fiction and non-fiction books.

Continue

*Fair usage policy applies

some cases from engine friction up to full load, it is evident that the rate of gasification must also vary through a large range. As a result of the conditions just mentioned, it will be necessary to accurately proportion the amount of steam delivered to the producer to the

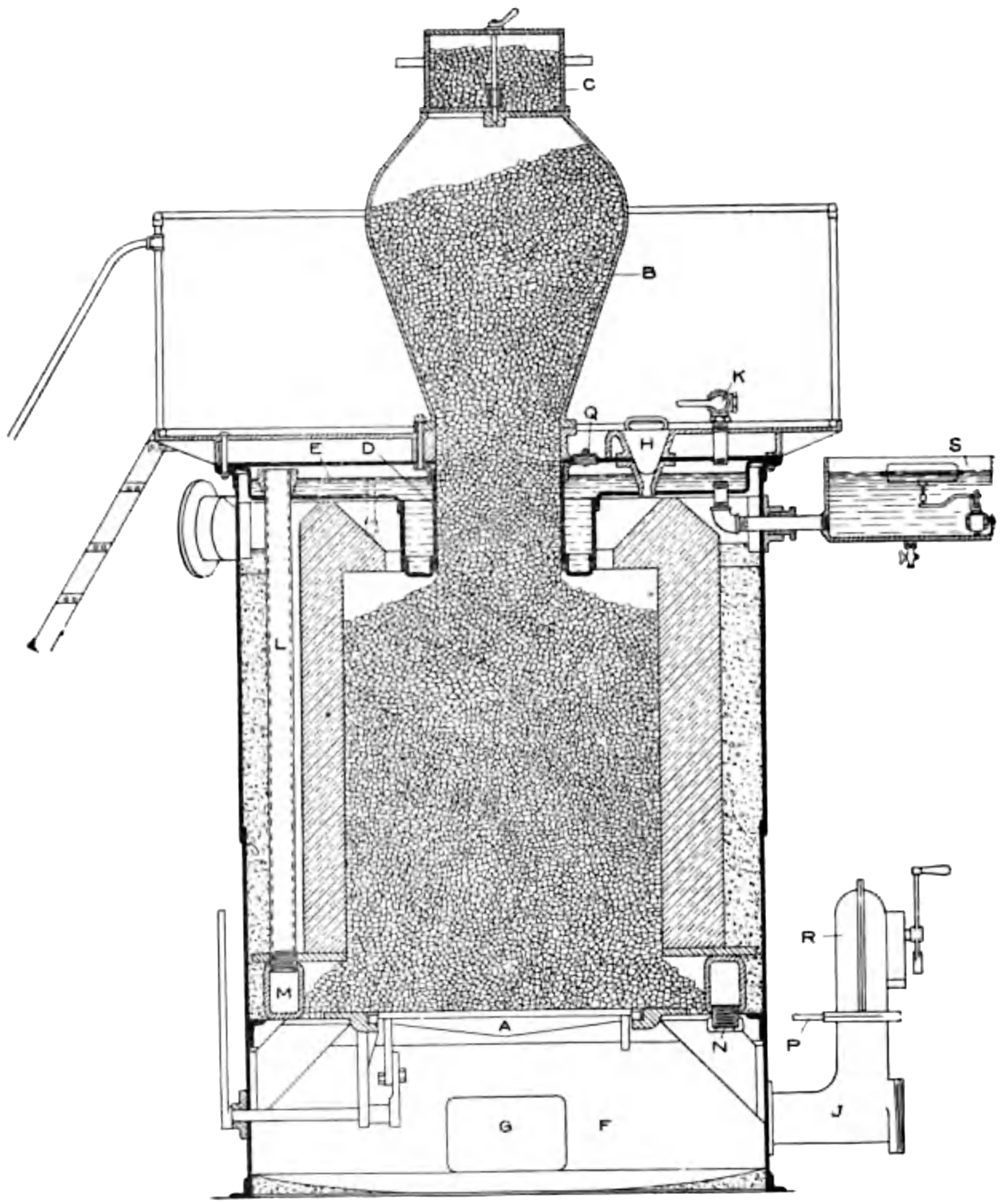

Fig. 21. American Crossley Suction Gas-Producer in Section.

amount of gas made therein. Several devices intended to accomplish this regulation will now be illustrated and described.

The American Crossley suction gas-producer is shown in section without the scrubbers in Fig. 21, and in perspective with the scrubbers

in Fig. 22. A is a shaking grate which may be operated by the lever on the outside. B is a fuel magazine with charging valve C. The fuel from B goes down through the feed tube D and into producer fuel bed below. D is surrounded by a water leg or jacket which forms a part of the vaporizer E. The construction of E is such as to form a cover for the top of the producer, and heat that is radiated upwards is used in vaporizing the water. The water in E is kept at a constant level by means of the float controlled valve in the auxiliary tank S on the side. K is an air-inlet valve. H is a poke-hole. Q is

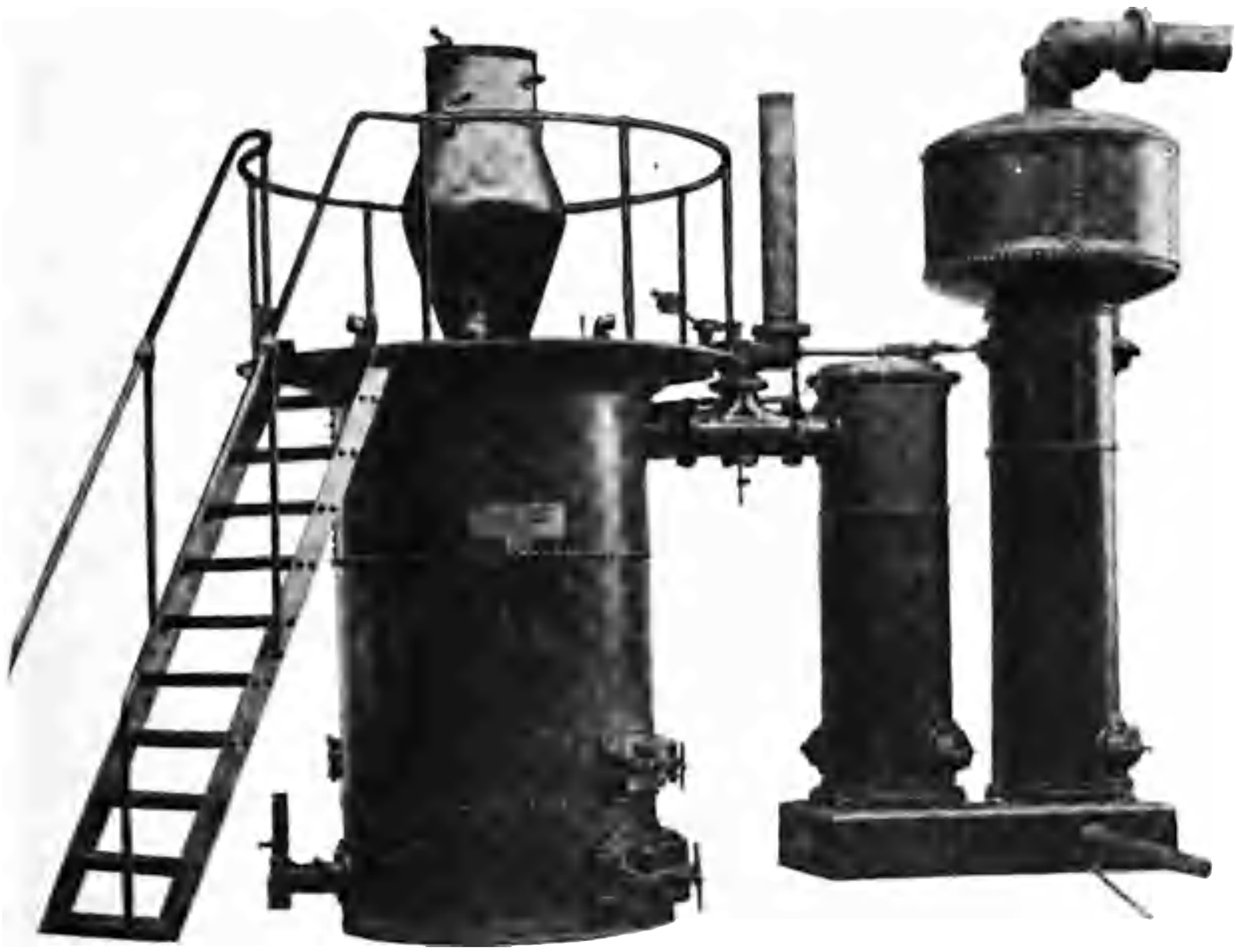

Fig. 22. American Crossley Suction Gas-Producer in Perspective.

a hand-hole for removing sediment from the water leg D. L is a pipe connecting the vaporizer E with the distributing ring M. N is a nipple for allowing the air and water vapor to pass from M to ash-chamber F. G is a cleaning door for F. R is a hand-blower with valve P and delivery pipe J. The operation of the water-regulating device is as follows:

The air for the ash-chamber is supplied from two sources. These are called the primary and secondary supply. The primary supply enters at J and passes up through the fuel bed. The secondary supply

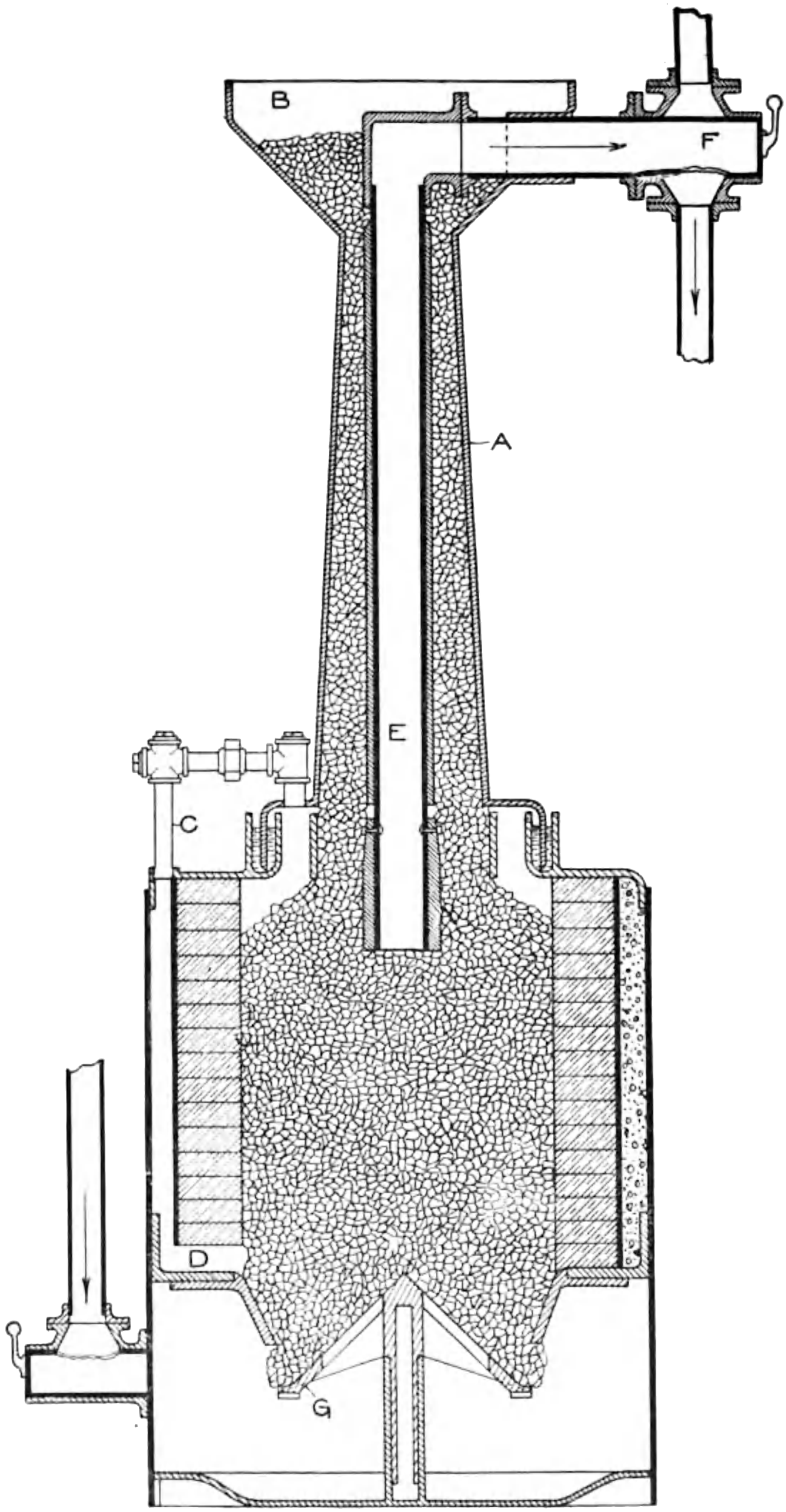

Fig. 23. Wyer Suction Gas-Producer.

enters at K, passes over the surface of the water in the vaporizer E, becoming saturated with water vapor, and then passes down pipe L into the ring M, and out into the ash-chamber F. The air entering the primary and secondary supply may be throttled by adjusting the valves P and K, so as to secure the proper proportion.

The Wyer suction gas-producer is shown in section in Fig. 23, and Fig. 24 shows its water-regulating device. Referring to Fig. 23, A is a superimposed retort with charging hopper B. The retort is connected by means of pipe C with the part D. The gas must pass around and up to the top of the retort through pipe E, and then out to valve F. In this way the gas is cooled and the fuel is preheated; that is, the sensible heat of the gas which would otherwise be lost is conserved and given back to the producers. The vapors given off in A pass to D by means of pipe C, and then go into the fire and are converted into fixed gases. G is a shaking grate which may be operated from the outside.

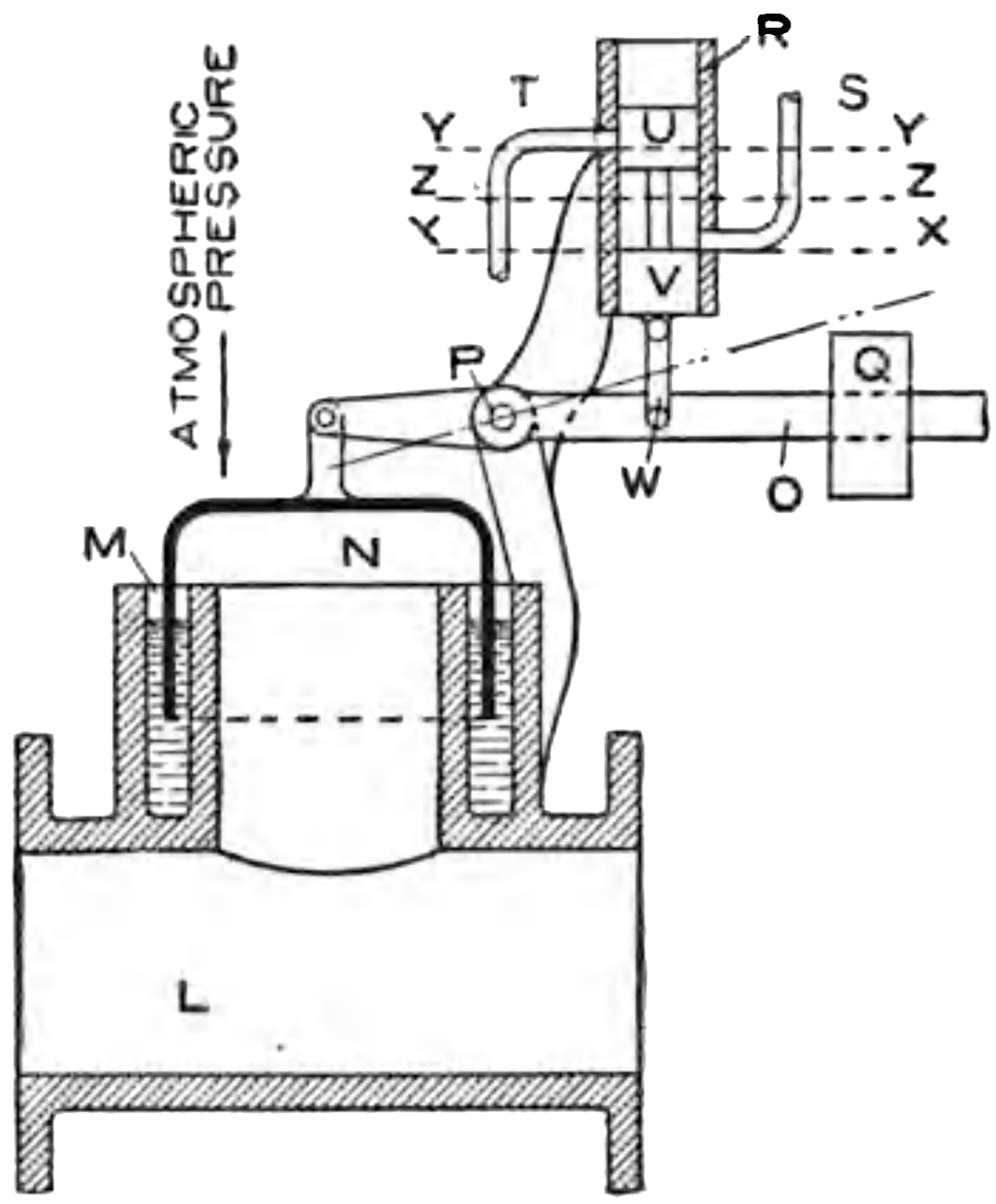

Fig. 24. Water-Regulating Device of Wyer Suction Gas-Producer.

Referring to Fig. 24, L is a pipe through which the gas passes in going from the producers to the engine; M is an annular chamber on L and is filled with water. N is a cup that is suspended in the water in M. P is a fulcrum for lever O and counter weight Q. R is a small cylinder with two pistons U and V. These pistons are connected by the small stem between them and are operated by link W and lever O. S is an inlet water port, while T is an outlet water port. From T the water goes to the vaporizer. The operation is as follows:

The weight of N is balanced by W. When the engine is drawing gas from the producer the pipe L will be at less than atmospheric

pressure; as a result, the exterior atmospheric pressure on N will force it down, lift weight Q up, and move the piston V from the level X X to the level Y Y. S will be closed. T will be opened and the water contained between U and V will pass out of T and go to the vaporizer. When the engine stops drawing gas from the producer, the pressure in L increases, forces N up, closes T, and opens S. Then at the next charging stroke of the engine the same cycle is repeated. If a throttling engine is used—that is, one that proportions the amount of gas taken into the cylinder to the load on the engine—the decrease of pressure in L will be directly proportional to the gas taken into the engine cylinder, and consequently the extent of the movement of N will be directly proportional to the amount of gas used in the engine or taken from the producer. Thus, if the engine is running at half load, the movement of N will raise X X only to Z Z, and only half the amount of water contained between U and V will go out of T and to the vaporizer.

The Dowson water regulator is shown in Fig. 25. A and B are two water chambers. C is a supply pipe and D is the overflow. The

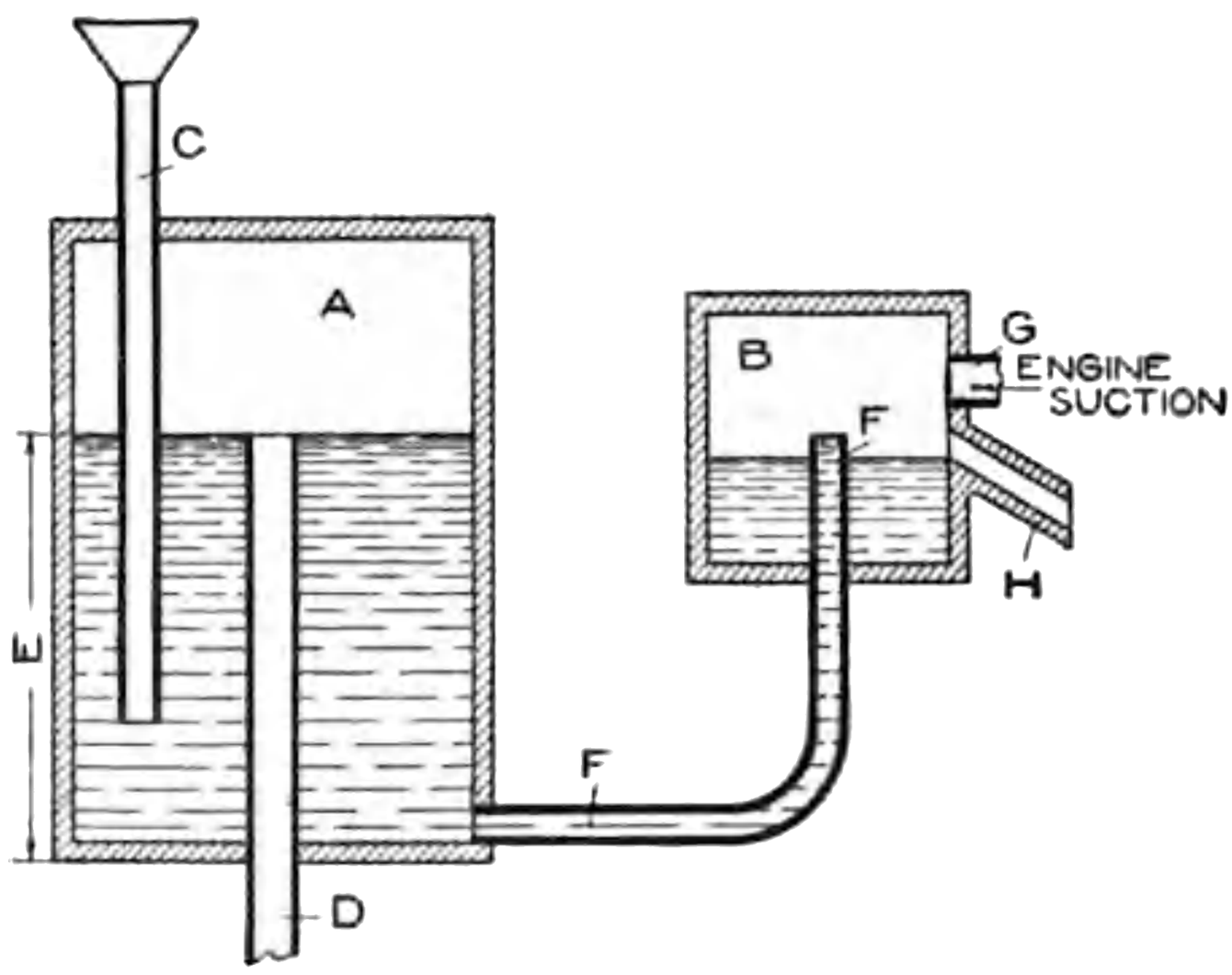

Fig. 25. Dowson Wate Regulator.

height E of the water in A may be adjusted by changing the height of D in A. F is a pipe connecting A and B. G is an opening connecting B with the gas pipe going to the gas engine, so that the engine pulsations will be felt in B. H delivers the water to the vaporizer. The operation is as follows:

During the charging stroke of the gas engine a partial vacuum will be produced in B; as a result, the water from A will flow out of the top of F, the flow ceasing just as soon as the engine has completed its charging stroke. The water so delivered to B will pass out through H. The amount of water flowing out each time may be adjusted by varying the distance E.

The Wintherthur water regulator is shown in Fig. 26. A is a chamber connected with the pipe leading from the producer to the engine. D is a piston working in A. C is an adjusting screw over coil spring D. E is a spindle with a needle valve at its lower end. F is a water chamber with overflow pipe G and inlet H. I is a pipe connecting with the vaporizer. J is a port connecting the water in F with I. K is an air inlet for the underside of the piston. The operation is as follows:

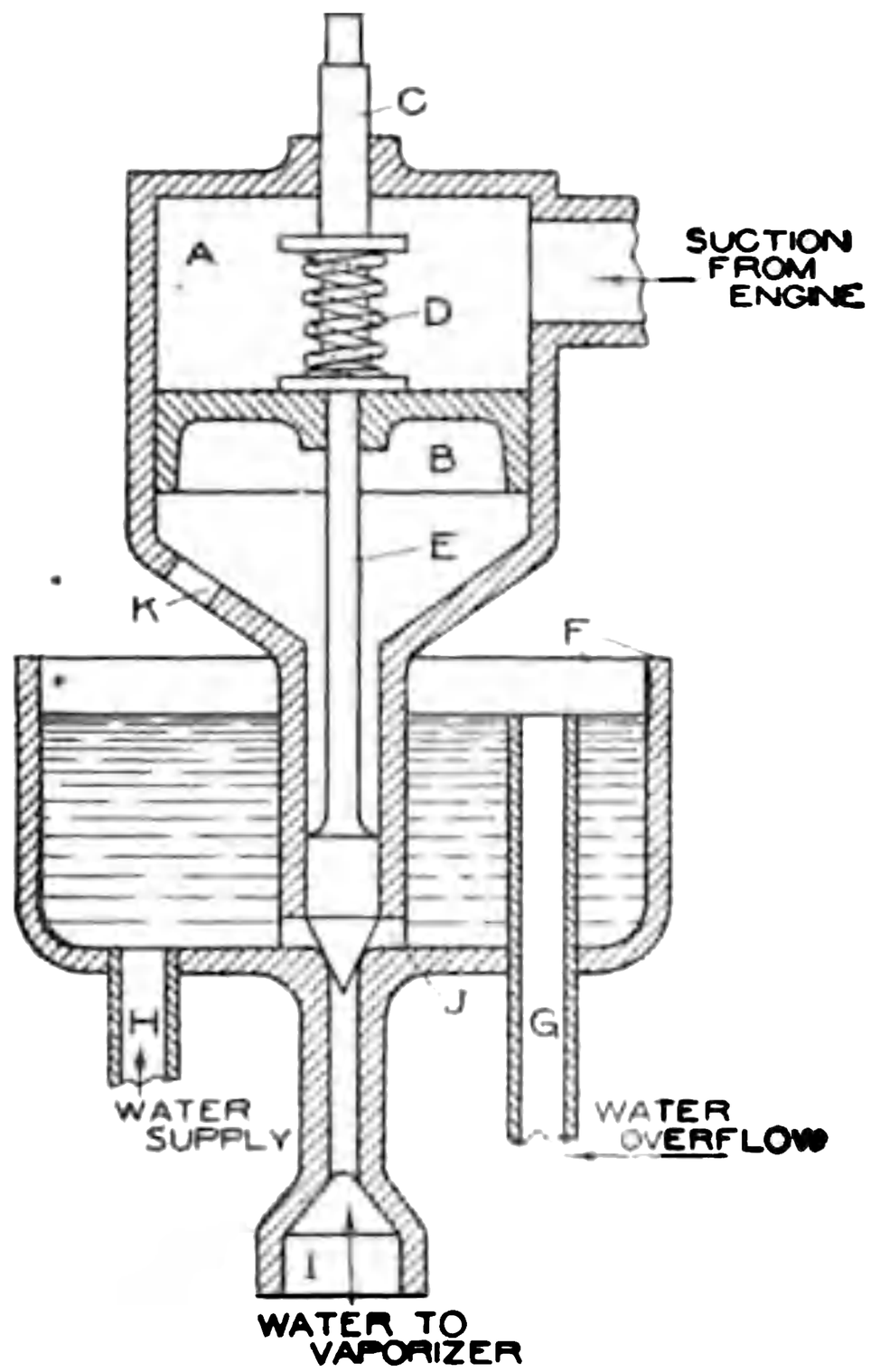

Fig. 26. Wintherthur Water Regulator.

The suction action of the gas engine produces a partial vacuum in A. As a result, the atmospheric pressure on the lower side of B raises it and E, compresses D, and opens the needle valve, allowing a certain amount of water to go to the vaporizer. When the sucking action of the gas engine ceases, the spring D will force B and E down and stop the flow of water. At the next charging stroke of the engine the same cycle is repeated. The extent of the movement of E and the resulting flow of water may be adjusted by changing the compression on spring D by means of screw C.

The Pierson water regulator is shown in Fig. 27. A is a diaphragm chamber connected with the pipe leading from the producer to the engine. B is a diaphragm. C is a needle valve connected to B by link F, levers G and H, and link I. J is a counterweight. D is

the water inlet from the supply and E is the water outlet. Frequently this device is used between the vaporizer and the producer so that D becomes a steam inlet and E a steam outlet. The operation is as follows:

The sucking action of the gas engine produces a partial vacuum in A and, as a result, the exterior atmospheric pressure will cause B to move inward, raise C, and allow a certain amount of water to pass

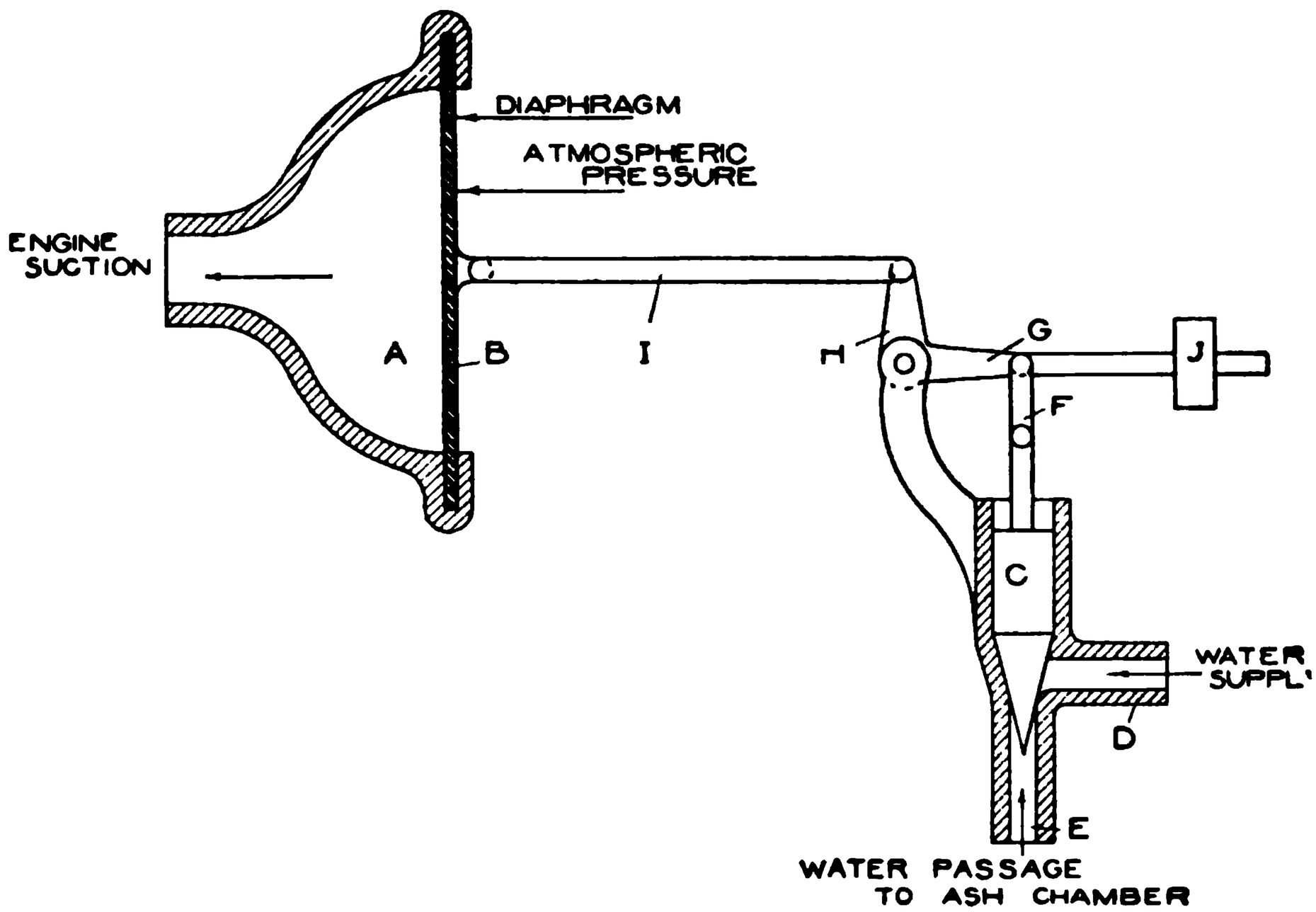

Fig. 27. Pierson Water Regulator.

through D and E. When the sucking action of the gas engine ceases, B will come back to its normal position, C will be closed, and the flow of water stopped. At the next charging stroke of the engine the same cycle is repeated. The amount of water admitted each time may be changed by adjusting the counterweight J.

The Smith water regulator is shown in Fig. 28. This also shows the heater for vaporizing the water and superheating the resulting steam and preheating the air by utilizing the waste heat in gas engine exhaust gases. A is the inlet for the exhaust gases while B is the interior of the heater. C is a thin, flat disk, around which the exhaust gases circulate and through which the air and steam pass. D is a shaft upon which the weighing vessel E is pivotally supported. F is a rod connecting E with the vane G. H is the air inlet; the curve

Purchase full membership to immediately unlock this page

HISTORY

Tens of thousands of important historical sources, many previously unobtainable, are now available for the first time with a Forgotten Books Full Membership.

Unlimited Access
$8.99/month

Continue

*Fair usage policy applies

ceases, the flow of air in H will cease and the counterweight will swing E and G back to their normal position; just as soon as I comes back to this position the flow of water will stop. The water falling down on the hot disks C is converted into steam and swept on through by the movement of the incoming air. In this passage the air becomes preheated and the steam superheated. At the next charging stroke of the engine the same cycle will be repeated. The amount of water delivered each time may be adjusted by means of the screw J.

By-product Gas-Producers. All by-product processes differ in detail only. They all are based on the same fundamental points; namely, a cooling of the gas after it leaves the producer, washing, and treatment with some reagent to precipitate the by-product.

Ammonia sulphate is about the only by-product that has enough commerical value to justify the additional expense required to save it, and its principal use is that of a fertilizer for certain soils. It is one of the most concentrated forms in which ammonia can be applied to the soil and gives very good results in clayey and loamy soils. It is, however, worthless for soils containing lime or chalk. The chief advantages of ammonia sulphate for fertilizing purposes are, that it is a definite product, quick acting, very concentrated, and easily mixed. Pure ammonia sulphate is a whitish crystaline salt and extremely soluble in water; the commercial article is generally grayish or brownish in color on account of small quantities of impurities. The ammonia sulphate is formed from the ammonia in the gas. Nearly all coal contains some nitrogen, usually about 1.5 per cent. From one-tenth to two-tenths of the nitrogen in the coal will go into the gas in the form of ammonia. By the use of an excessive amount of steam the yield of ammonia may be increased very much.

The gas-producer is usually of the pressure type and generally very little different from other producers. The by-product features are introduced after the gas leaves the producer proper. The scrubbing system must always be large and complicated; the by-product system is not adapted for small plants, and the additional first cost of the apparatus necessitates a large outlay of money. The operating expenses will also be higher on account of the salary of a skilled chemist required to handle the plant, reagents for the process and laboratory, and advertising of by-product. To make the plant

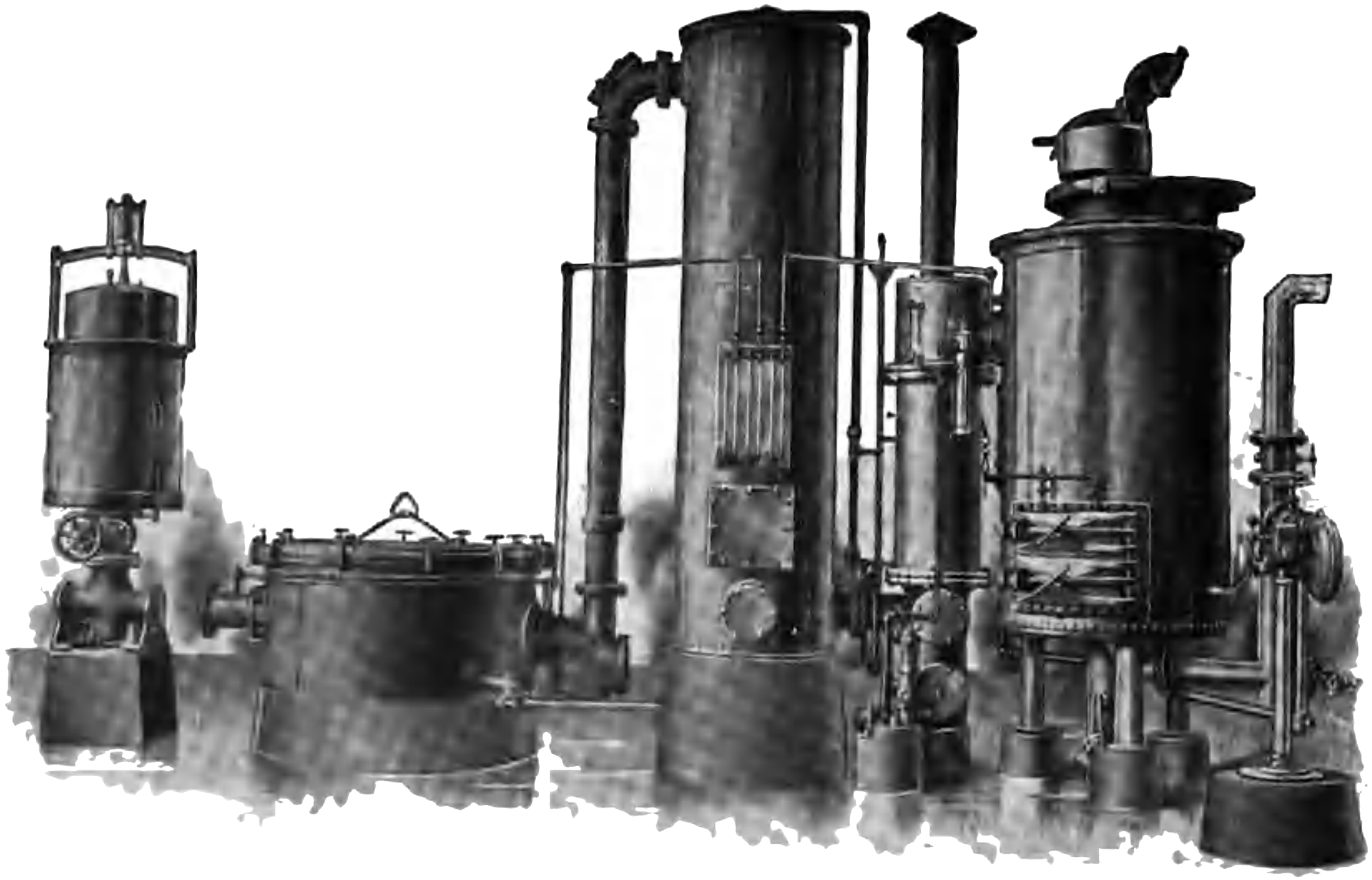

SUCTION GAS-PRODUCER PLANT
Olds Gas Power Co.

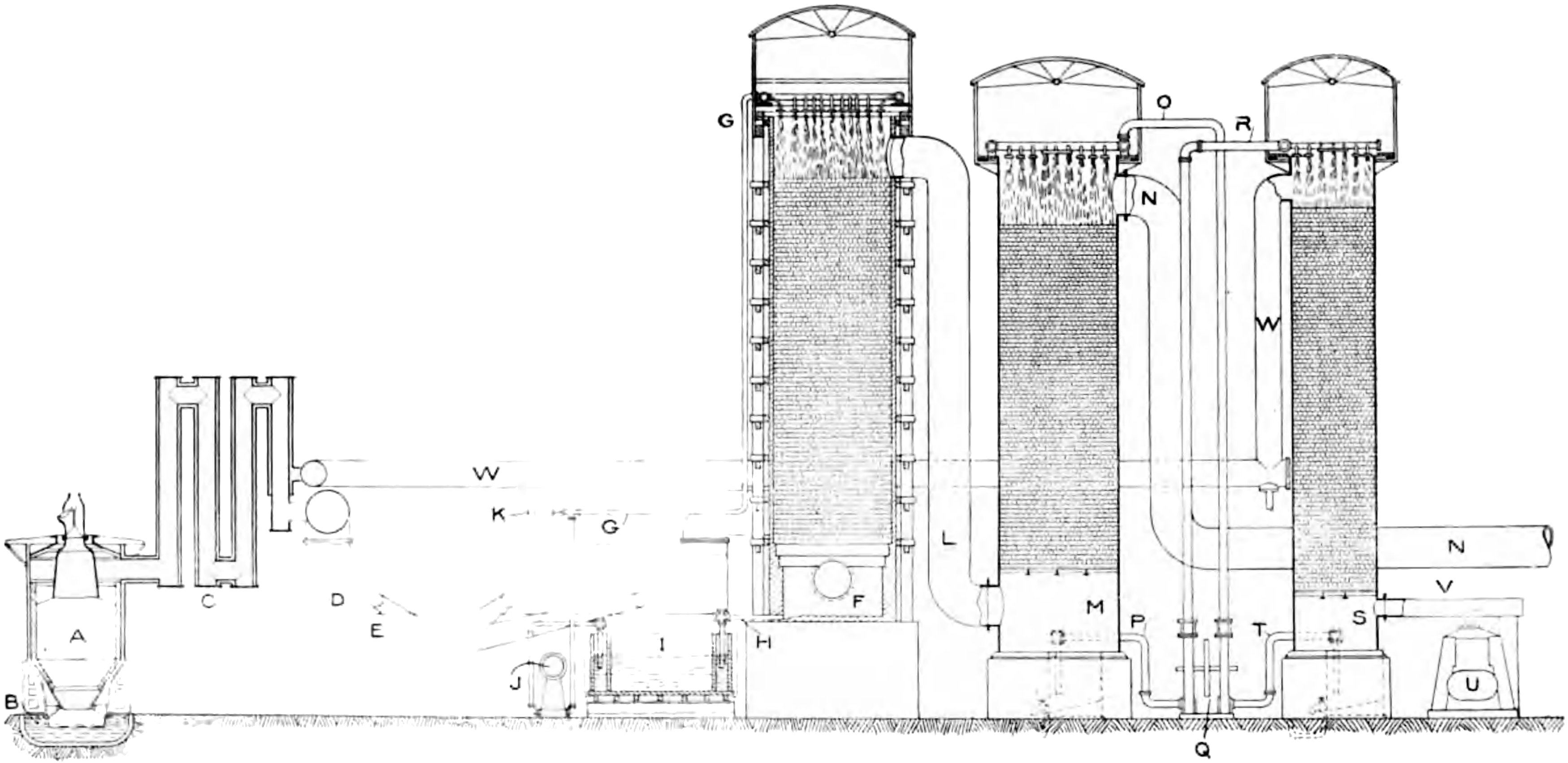

Fig. 29. Diagrammatic Section of Mond By-Product Gas-Producer.

a profitable investment the revenue from the by-product must be a considerable amount.

The Mond by-product system is the only one that has been used to any extent in this country, and it will now be described and illustrated. A diagrammatic section is shown in Fig. 29; Fig. 30 gives a general view of a Mond by-product plant, and Fig. 31 shows the producer regenerator and gas-washer. Referring to Fig. 29, A is the producer with water-seal ash-pan B. C is the air regenerator; the hot gas from the producer is passed through this and serves to pre-

Fig. 30. General View of Mond By-Product Plant.

heat the incoming air, which passes through the outer compartment of the regenerator. D is a mechanical gas-washer. A few inches of water is in the bottom, and as the gas passes through, the rotating paddles, or dashers, E throw the water upward and secure a thorough mixture of the gas and water. In this way a large number of the impurities are washed out. From D the gas goes to the bottom of the acid tower F. This tower is filled with checker work and diluted sulphuric acid is introduced at top by the pipe G. As the gas goes upward, it is brought into intimate contact with the acid and this acts on the small percentage of ammonia in the gas, forming ammonia sulphate. The ammonia sulphate solution collects at the bottom of

F and then drains to the tank I by means of pipe H. J is a circulating pump which takes the liquor from I and delivers it to the top of F by pipe G. The liquor is circulated in this way until it reaches a certain degree of saturation; then some of it is by-passed out of the system by pipe K, and a corresponding amount of fresh acid added to the tank I. The concentrated ammonia sulphate solution is then

Fig. 31. Producer Regenerator and Gas Washer of Mond By-Product Plant.

evaporated and the sulphate reduced to a solid crystaline state. From the top of tower F the gas goes to the bottom of the cooling tower M by pipe L, and then goes up and out through pipe N. O is a pipe delivering cold water to the top of M. As this water trickles down through M it becomes heated by absorbing the heat from the ascending gas. The hot water from the bottom of M is withdrawn

by pipe P and double circulating pump Q, and then delivered to the top of the air heating tower S. U is an air blower that furnishes the air to the producer A. V is a pipe connecting U with the bottom of S. As the cold air goes up through S, it becomes heated and saturated by the hot water from R. From the top of S the air goes to the regenerator C by means of pipe W. The cold water collecting at the bottom of S is withdrawn by pipe T and the double circulating pump Q, and delivered to the top of M. From the description just given it will be seen that the water acts as a heat carrier between the gas-cooling tower M and the air-heating tower S. Some idea of the extent and size of one of these plants may be obtained by a close examination of Figs. 30 and 31.

GAS CLEANING

Producer gas, in addition to containing condensible constituents as shown in table 1, nearly always carries fine dust with it. Gas cleaning is used synonymously with gas scrubbing and gas washing and means either the removal of foreign constituents from the gas, or the removal of certain elements of the gas composition that are undesirable for certain uses of the gas. The idea of "washing" and "scrubbing" evidently comes from the fact that water is nearly always used in gas-cleaning processes. The object in cleaning any particular gas is simply to prepare it for some particular kind of work. No general rules can be laid for the number of constituents that must be removed or the degree of purity required. The primary requisite is that the gas shall be adapted to its specific work. The highest degree of purity is required for engine work; at the same time the additional cost of cleaning the gas up to that point might prohibit its use for heating a furnace where the impurities would not have a detrimental effect.

Gases may be cleaned by means of deflectors, liquid scrubbers, coolers, filters, and rotating scrubbers.

Deflectors. The deflector consists of an obstruction placed across the path of moving gas, and causes a sudden change of course. This has a tendency to precipitate the fine dust or water globules carried in suspension. It is very similar to the steam separator used near steam engines to separate the steam and water.

Purchase full membership to immediately unlock this page

DELVE INTO FANTASY, MAGIC, MYTHOLOGY & FOLKLORE

Forgotten Books' Full Membership gives access to 797,885 ancient and modern, fiction and non-fiction books.

Continue

*Fair usage policy applies

quently used together. No one type is usually efficient enough to remove all the impurities.

The removal of *tar* from gas is one of the hardest problems in connection with gas cleaning. The use of a tar-laden gas in gas engines will quickly gum the valves and necessitate a stoppage of the producer and engine. This is the reason why so many gas-producers for power purposes are using anthracite coal. This particular fuel making a gas practically free from tar, makes the problem of gas cleaning an easy matter. However, there are many cases where the high cost of anthracite coal prohibits the use of producer gas for power purposes. In many instances the cost of anthracite coal is four times the cost of bituminous coal. Now, since a pound of the latter will make just as much producer gas as a pound of the former there would evidently be a decided advantage in many cases to use bituminous coal in a producer-gas power plant. The problem of the use of bituminous coal for such work is simply the problem of eliminating the tar. This may be done by the separation of the tar from the gas or the use of a device that will prevent the formation of the tar or its deposition in the gas.

Tar is a very complex substance and is one of the products of the destructive distillation of coal. It is made up of about two hundred other compounds and some of these are so complex and hard to isolate that very little is known about them. The exact composition will depend on a large number of factors, the most important of which is the temperature at which it is formed. Coal tar has a specific gravity of about 1.15, a black color, and a very marked and disagreeable odor. It condenses easily and if brought into intimate contact with incandescent carbon it may be converted into fixed gases. The last fact just mentioned forms the basis of all tar-destruction methods; that is, where the tar is broken up in the producer.

The separation of the tar from the gas may be accomplished by an extensive tower scrubber or the use of some form of centrifugal apparatus which will drive the tar out of the gas by centrifugal force. The latter method can be made very effective, but the former is adapted only for gas containing small amounts of tar. On the other hand, the centrifugal method requires close watching, and, in some cases, considerable power to run the apparatus; neither method is as satisfactory as the complete destruction of the tar in the producer.

The tar is always evolved in the distillation zone and goes directly into the distillation products. All schemes for tar destruction consist in bringing these *distillation* products into close contact with hot carbon, so that the condensible constituents will be converted into fixed gases. This may be accomplished by the use of a down-draft producer, as shown in Fig. 16; the removal of the gas in the middle of the producer or the circulation of distillation products, as shown in Fig. 15; the use of a distillation retort, as shown in Fig. 14; or underfeeding, as shown in Fig. 18. The passing of the tar through a separate chamber filled with incandescent coke has also been used.

USES OF PRODUCER GAS

The use of producer gas now extends to a large number of industries. The following diagram taken from the author's Treatise on Producer Gas and Gas-Producers gives a classification of the various uses.

General Uses of Producer Gas.
- 1. Fuel for Gas Engines
- 2. Firing Steam Boilers
- 3. Firing Ceramic Kilns
  - Brick Kilns
  - Tile Kilns
  - Pottery Kilns
  - Muffle Kilns
  - Lime Kilns
  - Cement Kilns
- 4. Firing Metallurgical Furnaces
  - Forges
  - Steel Furnaces
  - Muffle Furnaces
  - Glass Furnaces
  - Roasting Furnaces

PRODUCER-GAS POWER PLANTS

There are now a large number of producer-gas power plants in successful operation in America. They have many advantages over steam plants and many more will be installed in the future. To be successful, the gas-producer and gas engine must be adapted to each other. Producer gas having a lower calorific power, the engine must handle a large volume of gas, and, as a result, the ports and valves must be larger. A 100-H. P. gas engine designed to use natural gas will develop only about 80-H. P. with producer gas or a loss of

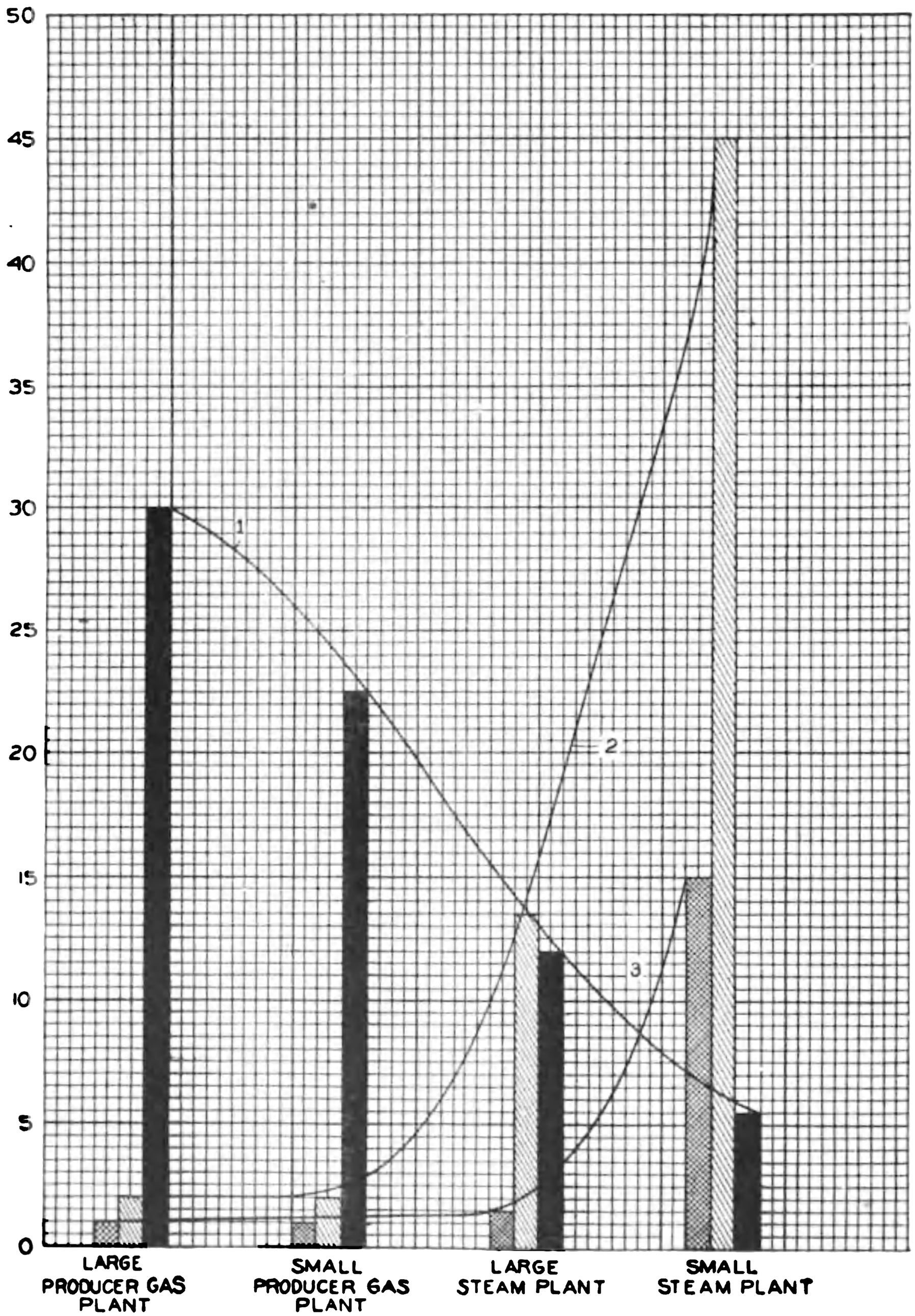

Fig. 32. Chart Showing Relative Efficiency of Producer-Gas and Steam Power Plants.

about 20 per cent. If a suction gas-producer is used there will be a further loss of probably 4 per cent due to the negative work of drawing the gas away from the producer.

The high fuel and water economy of the producer-gas power plant is one of its strongest advantages over the steam power plant. These points are clearly shown in Fig. 32. This arrangement of data brings out several important points. It will be seen that there is little difference in the coal or water consumption between large and small producer-gas plants. This is due to the fact that small gas engines may have practically the same thermal efficiency as large ones. As a result of this fact the small producer-gas power plant can be operated nearly as cheaply as a large plant. In other words, it is not necessary to use large units in order to get economical results. In many cases where the load fluctuation is large much better results will be obtained by installing, say four 500-H. P. gas engine units in place of one 2,000-H. P. unit. Another interesting fact shown on Fig. 32 is, that even a small producer-gas plant is more economical than a large and complicated steam plant. The economy of water of the producer-gas plant over the steam plant is always a desirable feature for the former, and in cases where water is scarce or impure so as to make it undesirable for boiler use, it is of the greatest importance.

Inasmuch as the gas-producer does not make any smoke, it is evident that the producer-gas power plant offers an ideal solution for the smoke problem. Just as soon as public sentiment against the smoke nuisance becomes crystalized into prohibitory laws, the gas-producer industry will receive a new impetus.

The labor in a producer-gas plant will generally be about the same as that in a similar steam plant. It is, however, much easier to install mechanical appliances for handling the fuel in a gas plant than in a steam plant. If a suction gas-producer is used the labor will also be decreased. The producer may be started in about twenty minutes and can be stopped instantly.

The first cost and cost of repairs will be about the same in producer-gas as in steam plants. Gas engines cost more per horse power than steam engines, but the cost of the smoke stack is eliminated. Sometimes in small producer-gas plants the cost will be about one-fifth higher than in steam plants.

In steam and producer-gas plant the steam and producer gas simply act as carriers of thermal energy. The cooling of the steam will lower and may entirely destroy its thermal energy, while the cooling of the gas will simply decrease its volume and increase the thermal energy carried per cubic foot. This last statement refers to calorific power only; since the sensible heat of the gas is of no use in the gas engine, the temperature of the gas as it leaves the producer should be very low. In other words, with producer gas the thermal energy carried by the gas *for* the gas engine will *not* be lowered if the gas is cooled. This fact makes it possible to put in central producer-gas plants with long pipe lines to distribute the gas to isolated engines.

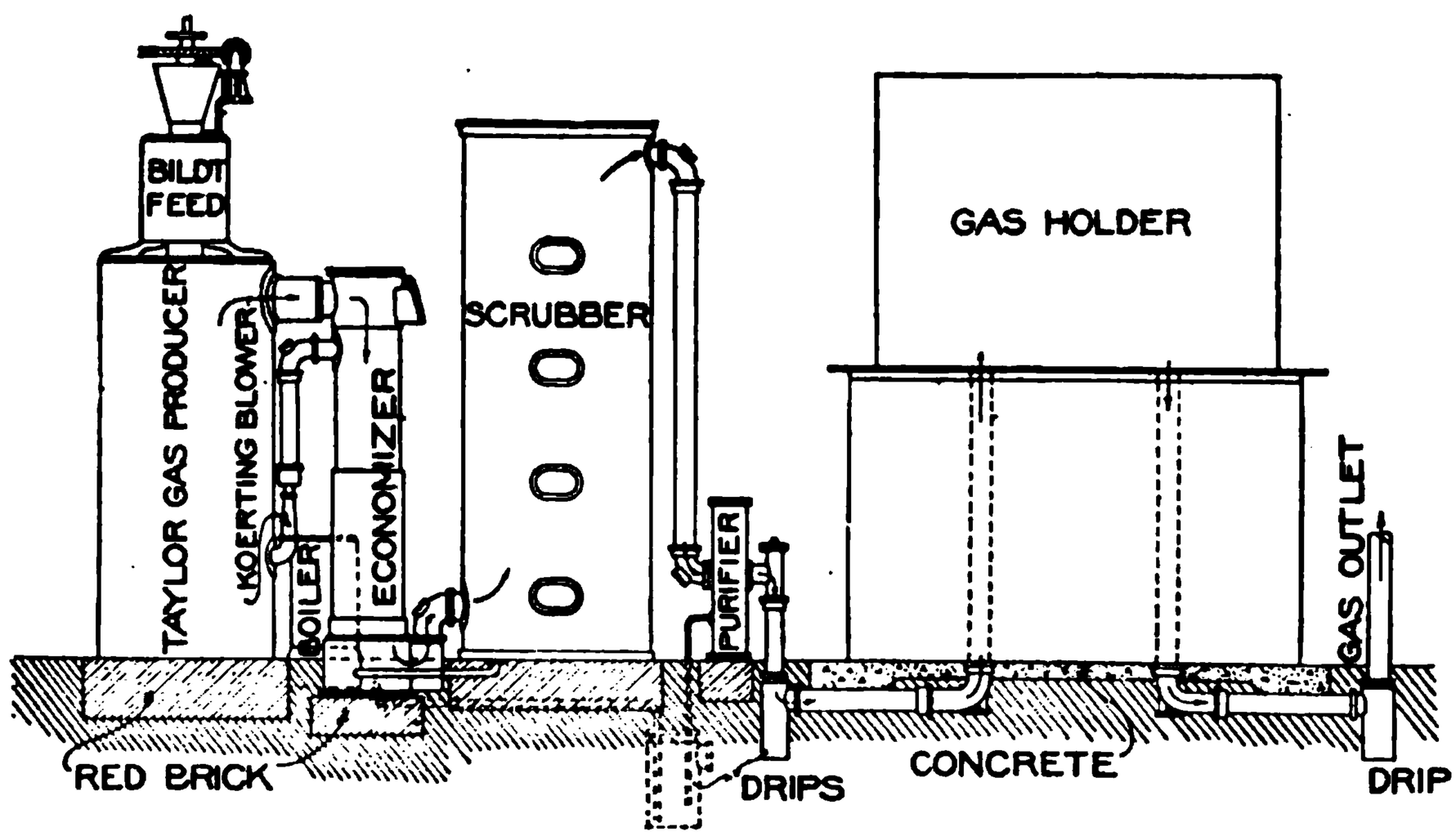

Fig. 33. Typical Producer Plant—Pressure Type.

This would mean a large saving in shafting, especially when electrical power is not available. Then too, it is entirely possible to build a large producer-gas plant at the coal mines and in place of shipping the coal to the various places of consumption simply pipe the gas to those places. This scheme if properly executed will give much better results than the shipping of coal to a large number of small plants.

The use of a gas holder for storing the gas has marked advantages in certain cases. By this means irregularities in the load may be taken care of without any difficulty. In some industries it may be desirable to have a small amount of gaseous fuel for heating furnaces, as forges, and, in such cases, the gas may be taken from the same holder that supplies the engine.

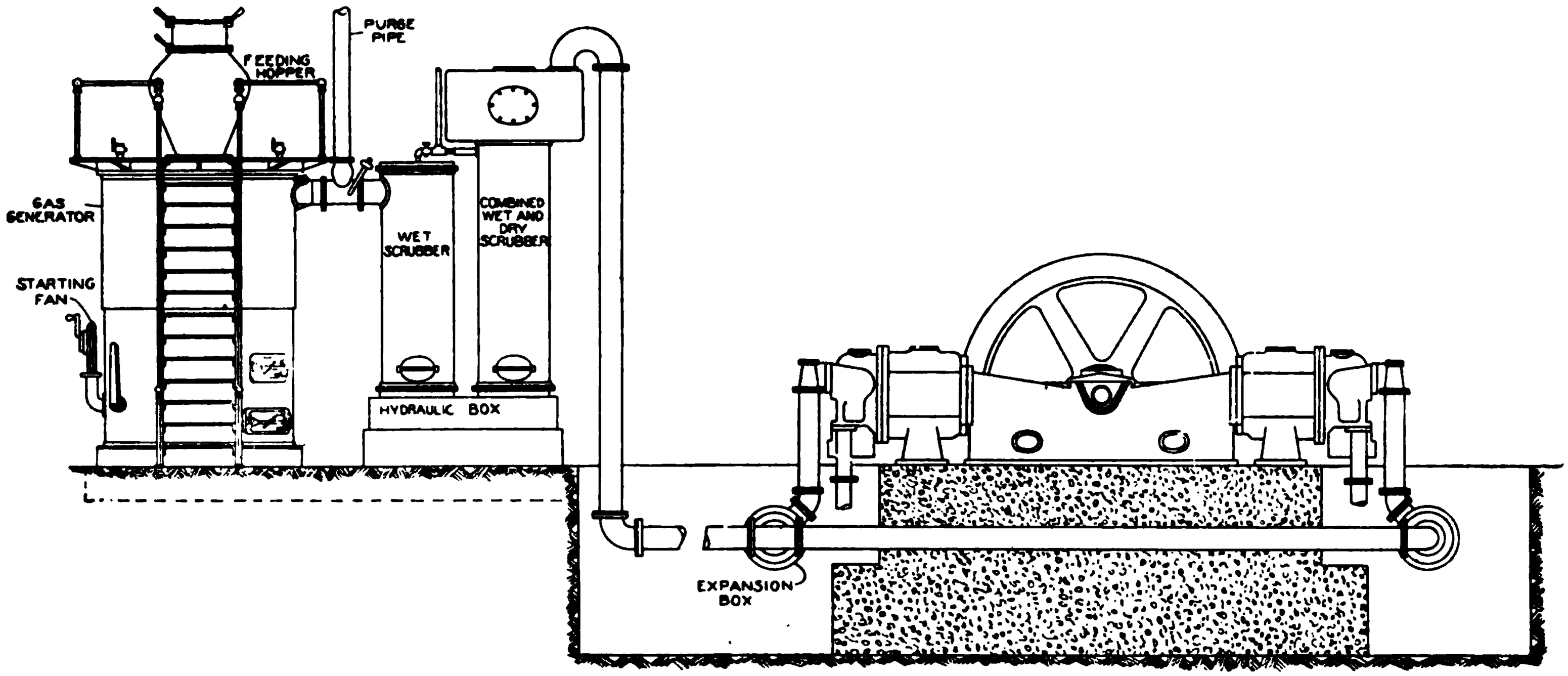

Fig. 34. Typical Suction Producer-Gas Power Plant.

Fig. 33 shows a typical producer-gas plant. The names of the various parts are given on the illustration. The holder is frequently placed farther away from the producer than shown in the illustration; in fact, it may be placed on any area that is available, regardless of immediate proximity to the producer. Fig. 34 represents a typical suction producer-gas power plant. The engine shown at the right-hand side and the names of the other parts are clearly indicated on the illustration. Fig. 35 is another view made from a photograph of the previous plant. The engines are shown in the foreground, while the producer and scrubbers may be seen beyond the open

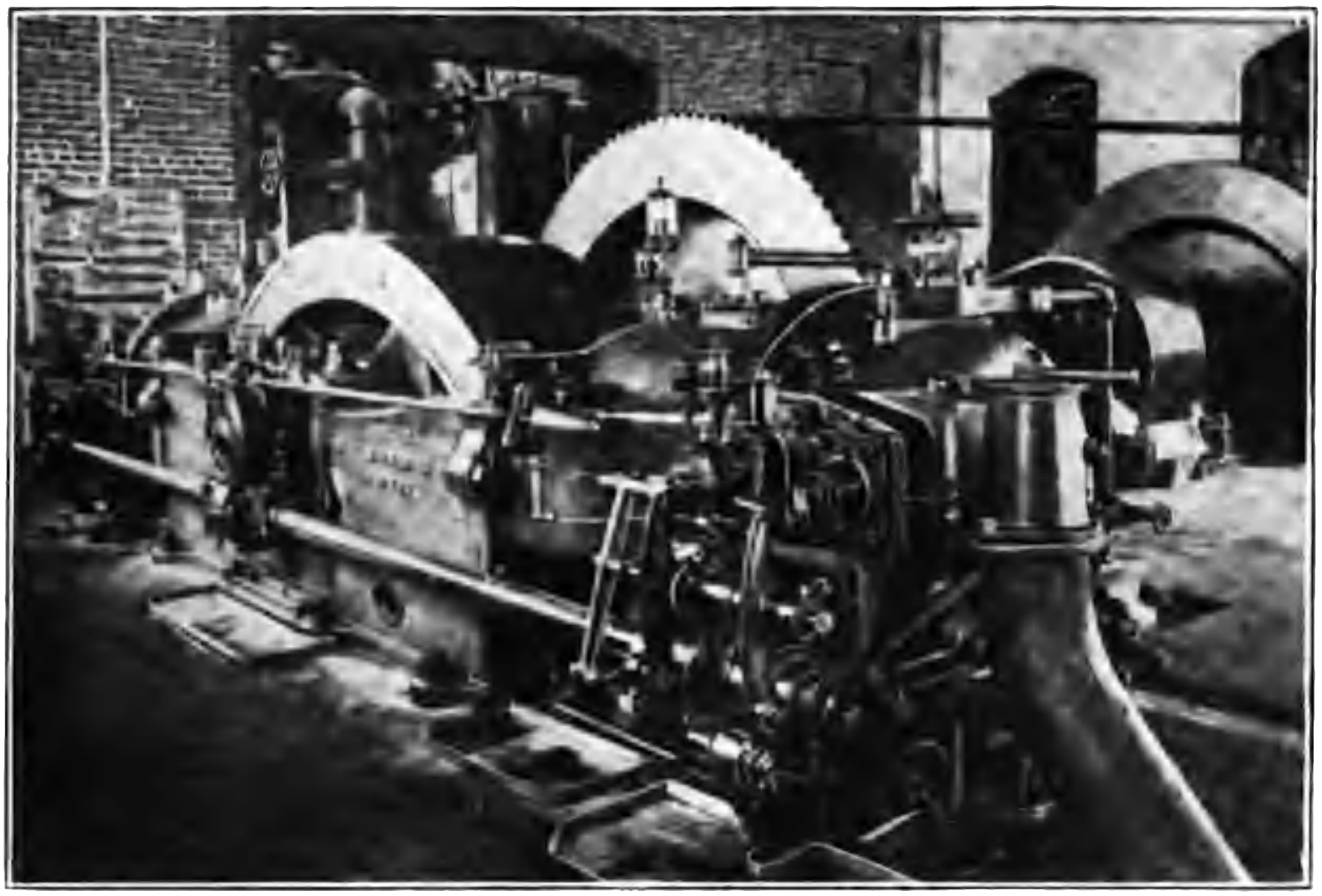

Fig. 35. View of Engine and Producer Room of Suction Producer-Gas Power Plant.

doorway. In Figs. 33 and 34 all the parts are shown in line with one another. This is done only to simplify the illustration. In nearly all installations the producer and auxiliary apparatus is arranged in more compact form.

Firing Steam Boilers. Producer gas has been used to a limited extent for this work in Europe. It is not very good engineering practice and should be used only in cases where steam is required in the process of manufacture; as for instance, in steaming lumber. It will be much better to eliminate the boiler entirely in other cases and use the gas directly in a gas engine. In general, no direct fuel

Purchase full membership to immediately unlock this page

HISTORY

Tens of thousands of important historical sources, many previously unobtainable, are now available for the first time with a Forgotten Books Full Membership.

Unlimited Access
$8.99/month

Continue

*Fair usage policy applies

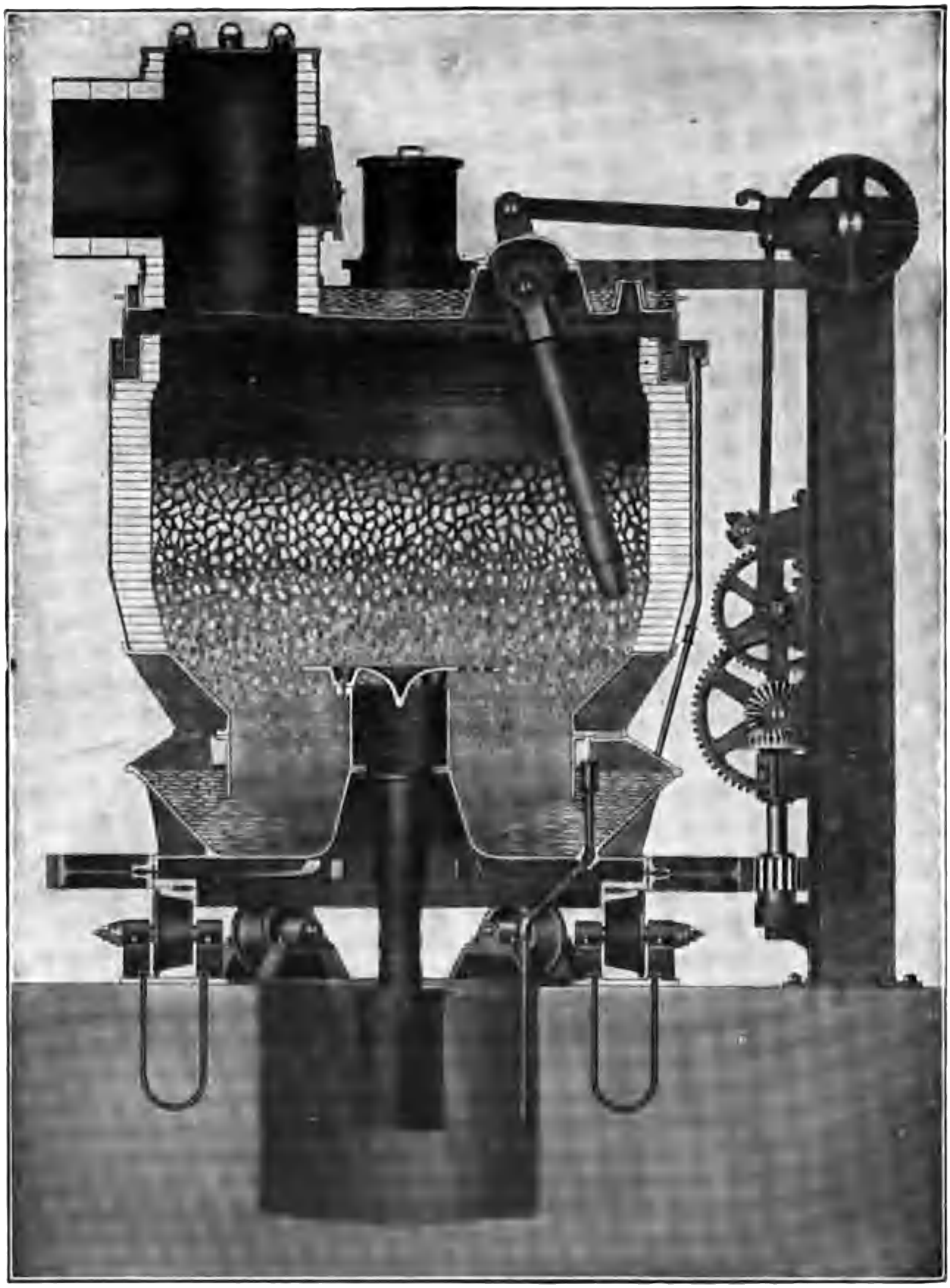

SECTIONAL VIEW OF HUGHES PATENT MECHANICALLY-POKED CONTINUOUS GAS PRODUCER

Standard Size is 10 ft. Diameter Inside of Fire Brick Lining, and 11 ft. 6 in. Outside of Shell

economy will result from first gasifying the fuel in a gas-producer and then burning the resulting gas under a steam boiler.

Firing Ceramic Kilns. Producer gas has been used extensively in Europe for this work but until the last few years has had a very limited use in America. Several costly failures have been made in attempting to use it, but these have not been the fault of the system but rather were due entirely to the ignorance of the men who have attempted to use it. Producer gas has decided advantages for ceramic work, but great care is necessary in applying it. No generalized rules can be given for its application. Every installation must be studied in detail and all the results co-ordinated to each other in order to secure a harmonious unit. The best results will be obtained in connection with continuous kilns. The use of producer gas in kilns eliminates clinkering in the kilns, induces more uniform burning, produces better combustion, makes it possible to regulate fire more readily, secures a centralization of furnaces, and should result in fuel economy.

Firing Metallurgical Furnaces. This was the first, and even today, is the largest field for the use of producer gas. It has been an important factor in developing the modern steel industry and has become a commerically necessary adjunct of it. The types of producers shown in Figs. 5, 6, 7, 8, are used very extensively for this work.

REQUIREMENTS

One of the most important requirements is that the gas-producer shall be adapted to the work it has to do. The construction of the producer should be compact and simple and so designed as to permit the easy removal of worn out parts. The feeding device should be such as to secure a uniform distribution of the fuel. The blast should be so introduced as to burn out all the carbon in the ash-zone and yet not produce localized combustion along the walls. The construction should be such as to permit the easy removal of the ashes. The entire process of gasification should be clean. The radiation loss should be low, and the producer must be efficient.

GAS POISONING

Producer gas on account of the presence of carbon monoxide will always be poisonous. The carbon monoxide has a specific toxic

effect on the human system, and when inspired enters into direct combination with the blood. The new compound formed is incapable of carrying oxygen to the tissues and is so stable that it can be broken up only with great difficulty. The action is very insidious, and if the amount that is inhaled is small, the person breathing it may be made almost helpless before they are aware of it. The symptoms are a sense of discomfort, with throbbing of the blood vessels, severe headaches, giddiness, and great debility. In case of poisoning, the first thing is to remove the patient to the fresh air and send for a physician. In handling a patient, great care must be exercised to keep the head higher than the lower part of the body.

CONCLUSIONS

The manufacture of producer gas is an old and well-established process. The process is not complicated and the chemical reactions are simple. Originally developed as a by-product of the iron industry, its ramifications now extend to a large number of industries. In many cases its use will result in fuel economy, and in the near future producer-gas power plants will be as common as steam power plants.

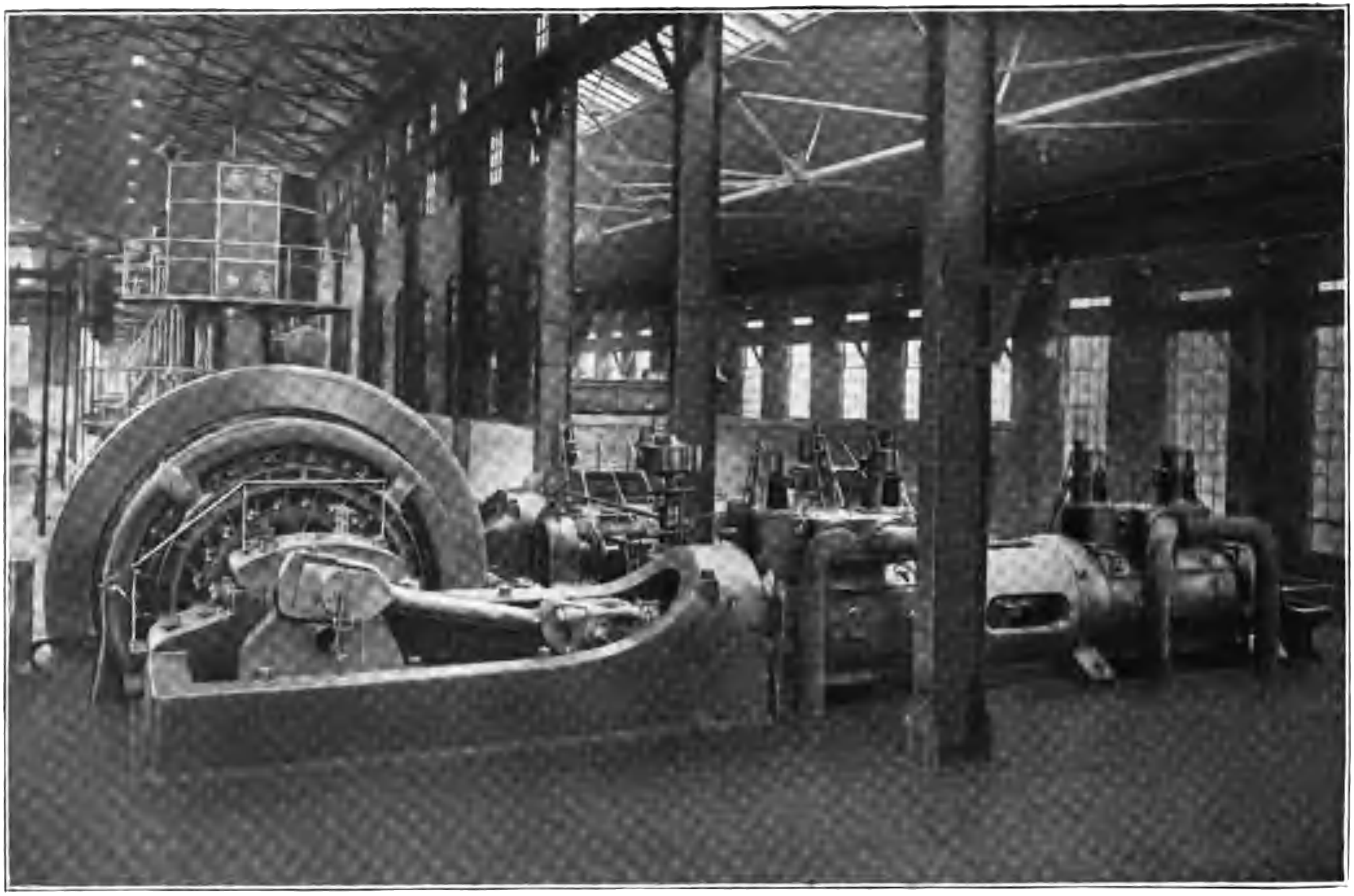

1000 H. P., FOUR-CYCLE, DOUBLE-ACTING, TWIN-TANDEM GAS ENGINE DRIVING DIRECT-CURRENT GENERATOR
Allis-Chalmers Co., Milwaukee, Wis.

GAS AND OIL ENGINES

PART I

The heat engine is at present the most important of all the available generators of power. Its purpose is to convert into work the heat derived from the combustion of fuel.

Heat engines may be divided into two broad classes, according to where the combustion of the fuel takes place. In one class the combustion takes place entirely *outside* the working cylinder, the heat of combustion being transmitted by conduction through the walls of a containing vessel to the substance which constitutes the active working agent. Such engines may be called *external-combustion motors.* The most common example of this class is the steam engine; another example, which is but little used, is the hot-air engine. If the combustion takes place *inside* the engine itself, or in a communicating vessel, so that the products of combustion act directly on the engine, we have an engine of the second class—the so-called *internal-combustion motors.* Gas and oil engines are the most common examples of this type of motor.

THE EXTERNAL-COMBUSTION MOTOR

Engines of the second class have certain inherent advantages over external-combustion motors. In the steam engine—practically the most perfect of the external-combustion motors—the heat of combustion generated in the furnace passes through the plates of the boiler to the water on the other side. During this process, about twenty-five per cent of the heat is wasted in good modern plants, by radiation and by loss up the chimney. The water in the boiler is heated to a temperature which does not exceed 400° F., having at that temperature a pressure of nearly 250 pounds per square inch. If the water were heated to a much higher temperature, the pressure would be too great (for example, at 500° F., the pressure would be 700 pounds), requiring boilers and engines stronger than are

Copyright, 1909, by American School of Correspondence

at present practicable. The products of combustion in the furnace have a temperature which is seldom less than 2,000° F. Consequently there is necessarily a very large drop in temperature as the heat passes through the boiler plates. The proportion of the total heat going to an engine which can be converted by the engine into work, depends chiefly upon the temperature range of the working substance; and in the steam engine this range is made comparatively small—not exceeding 300° F.—because of the corresponding pressure limits. Consequently a steam plant not only loses much of its heat up the chimney, but also is able to convert but a small part of the heat that goes to the engine into work. In the best modern steam engines, only about twenty per cent of the heat going to the engine is converted into work; about sixteen per cent of the heat of combustion of the fuel is converted into work in the best modern steam plants. The ordinary steam engine does not convert into work more than from six to ten per cent of the heat of combustion of the fuel. An economical steam plant consists not only of boilers and engines, but has also a large number of auxiliaries, such as feed-pumps, air-pumps, condensers, feed-water heaters, economizer, coal conveyors, and steam traps. After shutting down, it requires considerable time and fuel to raise steam in the boilers before the plant can be put again in operation; or, if the fires are kept banked, so as to maintain steam pressure while the engines are not running, a considerable amount of fuel will be used for this purpose, without any corresponding work being done.

THE INTERNAL-COMBUSTION MOTOR

In the internal-combustion motor where the fuel is a gas or volatile oil, there is no apparatus corresponding to a boiler, and no losses corresponding to the boiler losses. If the fuel is coal, it has to be converted into gas before it can be used in an internal-combustion motor; and this necessitates the use of a *gas-producer*, in which some heat will be lost, though not so much as is usual in a boiler. The fuel, being burned in the engine, gives there a temperature of from 2,000° F. to 3,000° F., so that the temperature range in the engine is very large; consequently the engine can be more efficient—that is, can convert a larger proportion of the heat of combustion into work—than in a steam plant. The high tem-

Purchase full membership to immediately unlock this page

DELVE INTO FANTASY, MAGIC, MYTHOLOGY & FOLKLORE

Forgotten Books' Full Membership gives access to 797,885 ancient and modern, fiction and non-fiction books.

Continue

*Fair usage policy applies

In the present work, whatever presentation is made of thermodynamic theory applies to both gas and oil engines. The special features of oil engines are treated after the discussion of the gas engine.

Historical Sketch. The history of the internal-combustion motor begins with the invention of cannon. A gun is a motor in which the working substance is the gas resulting from the combustion of the powder, and in which work is done on the projectile, giving it kinetic energy. Such a motor is not continuous in its action; but it offers possibilities of a practicable engine if the powder charge is small and the projectile or piston on which the gases act is restricted in its movement. The earliest internal-combustion motors devised for doing useful work were intended to use gunpowder. The first of these was suggested by Abbé Hautefeuille in 1678, and was followed shortly by others, none of which were practically realizable in the then state of the mechanic arts.

It was not until the discovery by Murdock, near the end of the eighteenth century, that a combustible gas could be obtained from coal by a process of distillation, that a practical internal-combustion motor was possible. As soon as the properties and method of manufacture of coal gas became known, numerous attempts were made to use it in engines. Up to the year 1860, many engines were devised and patented, and in several cases constructed, operated, and sold. None of these engines, however, can be said to have been satisfactory. They were irregular in action, noisy, wasteful of fuel, and in general had practical defects.

The *Lenoir engine*, which appeared in 1860, was the first really practical gas engine. Hundreds of these engines were made and sold; and the greatest interest in this type was aroused in France, where it was built, and in England, where it was largely used.

In general appearance the engine resembles a double-acting horizontal steam engine. The cylinder, shown in horizontal section in Fig. 1, has a separate admission port *a* and exhaust port *b* at each end. The valves are simple slide valves driven by eccentrics, and so designed that the inside edges alone uncover the ports. The valve *G* is used for the admission of the explosive mixture, which consists of air entering the valve cavity from *d*, and gas coming through one of the branches *r* of the gas pipe and passing through the hole

i in the valve. The air and gas enter the port *a* through a number of small holes in which they are thoroughly mixed; and the mixture is exploded in the cylinder, when desired, by an electric igniter *n*. The exhaust is through the port *b* and the cavity in the exhaust valve *H* to the atmosphere. As the cylinder rapidly becomes very hot, it is provided with a water jacket.

The series or cycle of operations which takes place in this engine is as follows: During the first part of the stroke, the admission valve

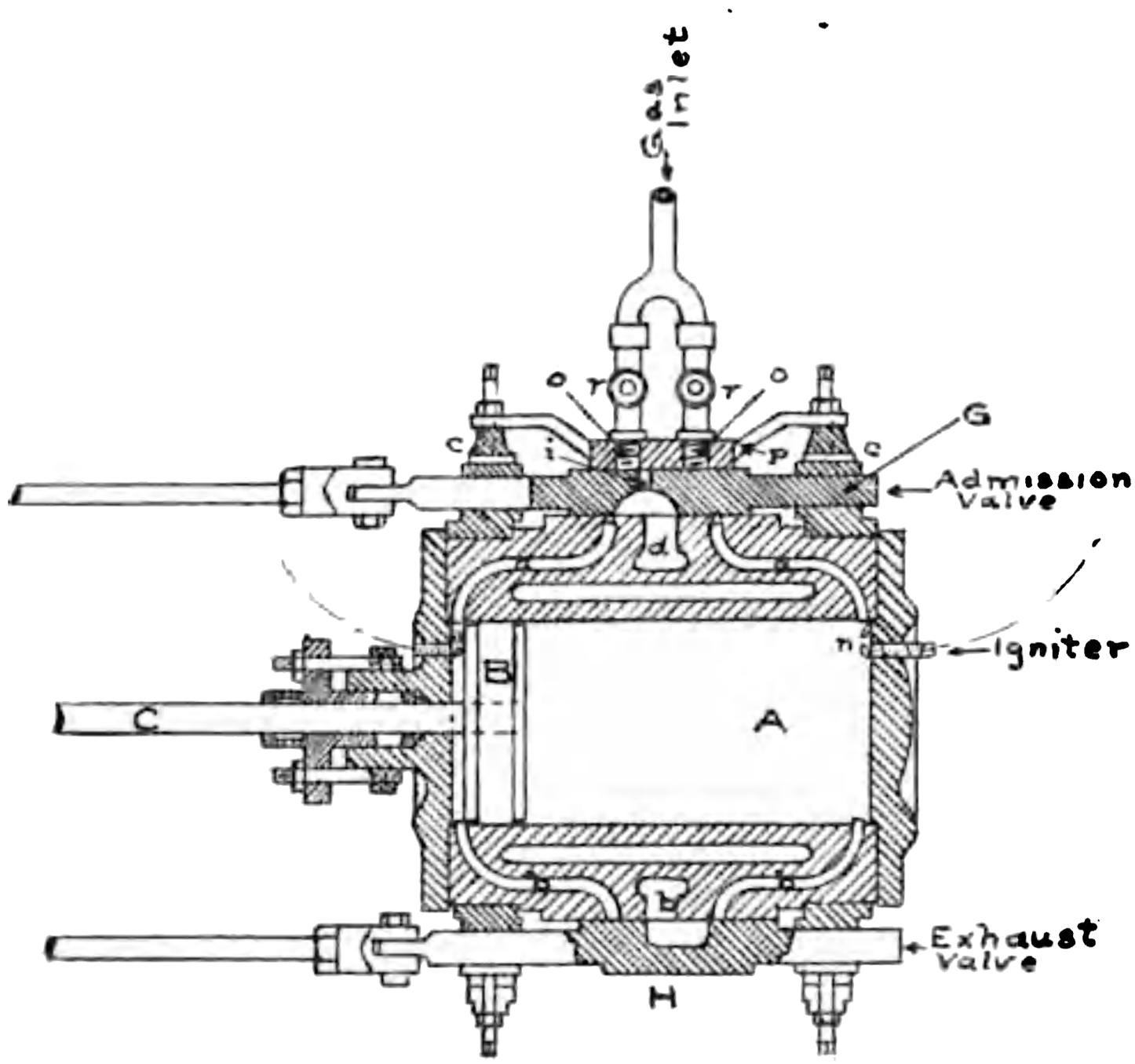

Fig. 1. Horizontal Section of Cylinder and Valves of Lenoir Engine.

G uncovers the port *a* so that a mixture of air and gas enters the cylinder, filling the space behind the piston. At half-stroke the valve closes the port, and a spark from an induction coil passes between the terminals *n* of the electric igniter, exploding the mixture and raising its pressure to 60 or 70 pounds per square inch. The piston is then forced to the end of its stroke, the products of combustion expanding behind it. At the end of the stroke, the valve *H* uncovers the exhaust port, and keeps it open throughout the whole of the return stroke, so that all the products of combustion are expelled to the atmosphere. A similar cycle of operations occurs on the other side of the piston. In Fig. 1 the valve *G* is just opening the port at the left so that ad-

mission may take place there, and the valve *H* is just opening the port at the right so that exhaust may occur from the other end of the cylinder. A reproduction of an indicator card from this engine is shown in Fig. 2.

This engine gave considerable trouble in many cases, but the principal reason for the falling-off in its use was the large amount of gas it required. It used from 60 to 70 cubic feet of coal gas per indicated horse-power per hour, or from three to four times as much as a modern gas engine, so that it did not compare very favorably with the steam engine in its running cost.

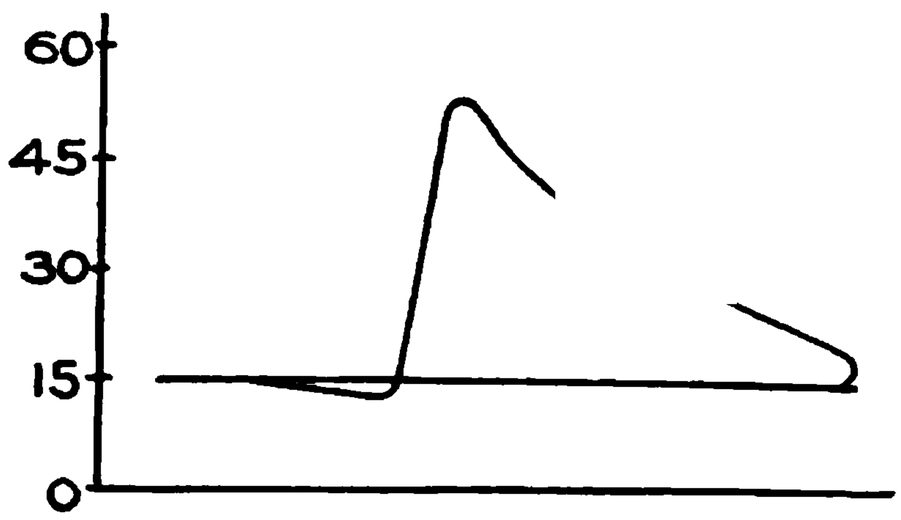

Fig. 2. Indicator Card of Lenoir Engine.

The Otto Cycle. In the year 1862, it was pointed out by a French engineer, Beau de Rochas, that in order to get high economy in a gas engine certain conditions of operation were necessary. The most important of these conditions is that the explosive mixture shall be compressed to a high pressure before ignition. In order to accomplish this, he proposed that the cycle of operations should occupy four strokes or two complete revolutions of the engine, and that the operations should be as follows:

1. *Suction* or *admission* of the charge of gas and air throughout the complete forward stroke.
2. *Compression* of the explosive mixture during the whole of the return stroke, so that it finally occupies only the clearance space.
3. *Ignition* of the charge at the end of the second stroke, and *expansion* of the exploded mixture throughout the whole of the next forward stroke
4. *Exhaust*, beginning at the end of the forward stroke and continuing throughout the whole of the last return stroke.

Fig. 3 is a diagram showing the operations of the four-stroke cycle.

This cycle was not actually used till 1876, when Dr. Otto adopted it in his engine and thereby produced the modern gas engine. The four-stroke cycle of Beau de Rochas is now universally known as the *Otto cycle.* In the past twenty years, several other cycles—some of great merit—have been devised and used; but at the present day an

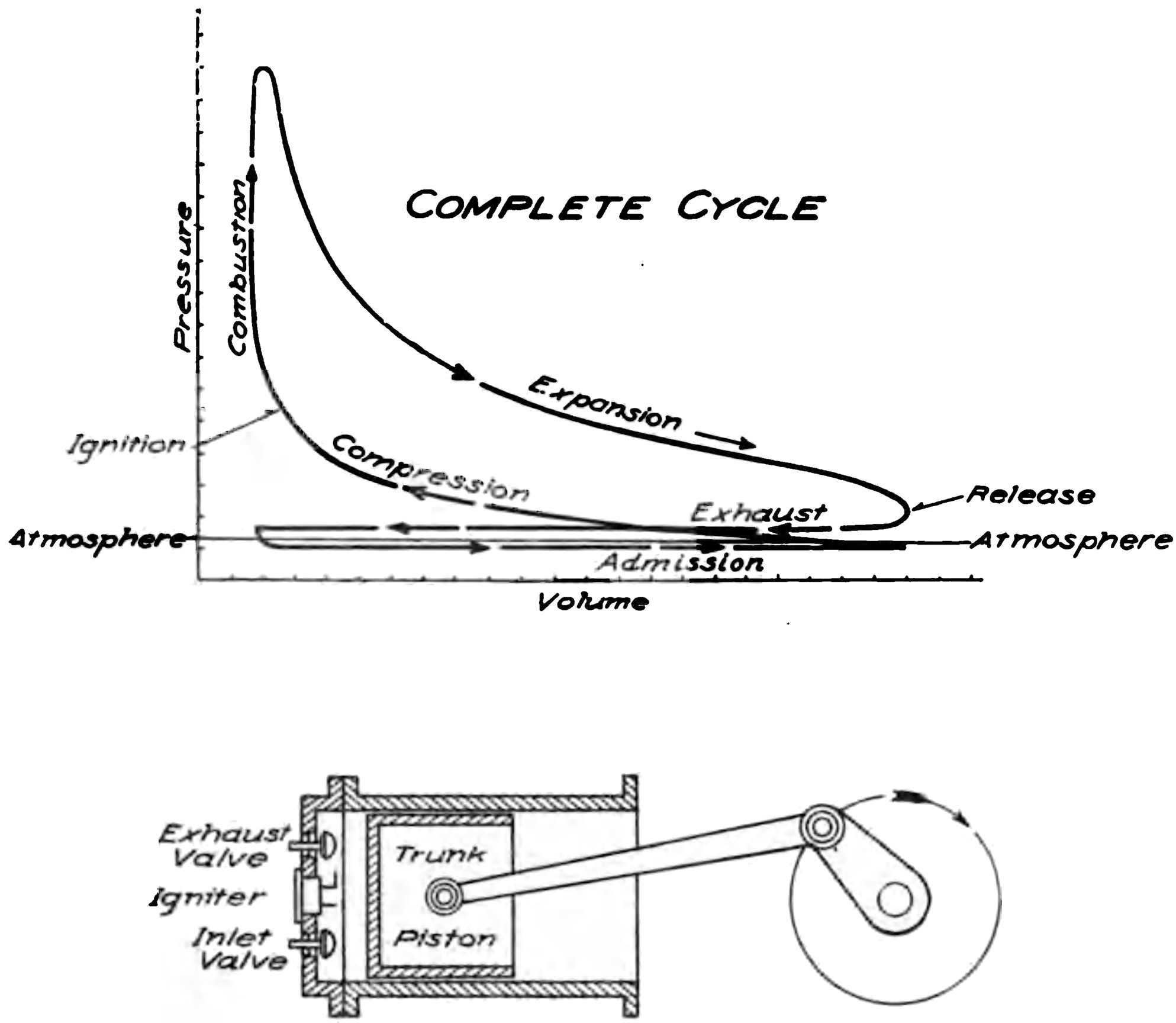

Admission	→ 1st.	Stroke	1st. Revolution
Compression	← 2nd.	"	
Expansion	→ 3rd.	"	2nd. Revolution
Exhaust	← 4th.	"	

Fig. 3. Diagram Showing Operations of Four-Stroke Cycle
Lower part of diagram, near atmosphere, exaggerated.

overwhelming majority of internal-combustion motors use the Otto cycle. The engines using this cycle are accordingly treated first and at greatest length.

THE MODERN GAS ENGINE

Modern gas engines may be divided broadly into three general classes:

(*a*) **High-Speed Engines.** Used principally in automobiles and motor-boats, developing generally not more than 15 horse-power in a single cylinder; commonly vertical and multi-cylinder, using gasoline as fuel and having jump-spark ignition. This highly specialized type has had enormous development in the past few years, and has practically reached a standard form and proportions. It is of extreme lightness and compactness, runs at high speeds, and has no governor.

(*b*) **Moderate-Power Stationary Engines.** Gas engines for stationary purposes, of all powers up to about 200 horse-power in a single cylinder. These engines are characterized by longer strokes and moderate speeds, by greater weight, and by the use of a governor. They show an extraordinary variety in form and arrangement, although, like the high-speed engines, they are practically always single-acting. They are also made to use any of the liquid or gaseous fuels. The ignition may be by hot tube or electric spark, but it is seldom of the jump-spark type.

(*c*) **Large Gas Engines.** Developing 250 horse-power and over in a single cylinder. These engines are the latest developments in gas-engine practice. They are horizontal, double-acting, with water-cooled pistons and rods. They use low-tension electric ignition. The fuel used in them most commonly is blast-furnace gas, though producer-gas, coke-oven gas, and natural gas are sometimes used.

As the engines of Class *b*, Moderate-Power Stationary Engines, are of most general importance to the engineer, the descriptions of engines given immediately below are taken from that class. High-speed engines and large engines are considered later in special sections. Most of what follows applies to gas engines of every kind; where it does not, special attention is called to that fact.

The construction of a medium-sized gas engine using the Otto cycle is illustrated in the sectional elevation, Fig 4, of a vertical engine. As in practically all such engines, the engine is single-acting, and has a long trunk piston which acts as a crosshead and also permits the use of several piston rings whereby leakage past the piston is prevented even with the high pressure obtained by the explosion. The engine is made single-acting because the piston, piston-rod, and stuffing-box give great trouble if exposed to the high temperature of the burning gases unless they are water-cooled, and the water cooling of these parts is difficult in small engines. Since the cycle occupies two revolutions, the valves and igniter have to operate once in two revolutions; therefore the cams which drive these parts

are mounted on shafts running at one-half the speed of the main shaft.

Referring to Fig. 4, *A* is the shaft which carries the exhaust-valve cam, and is driven by gears from the main shaft. The exhaust cam works against a roller carried on the free end of the guide lever

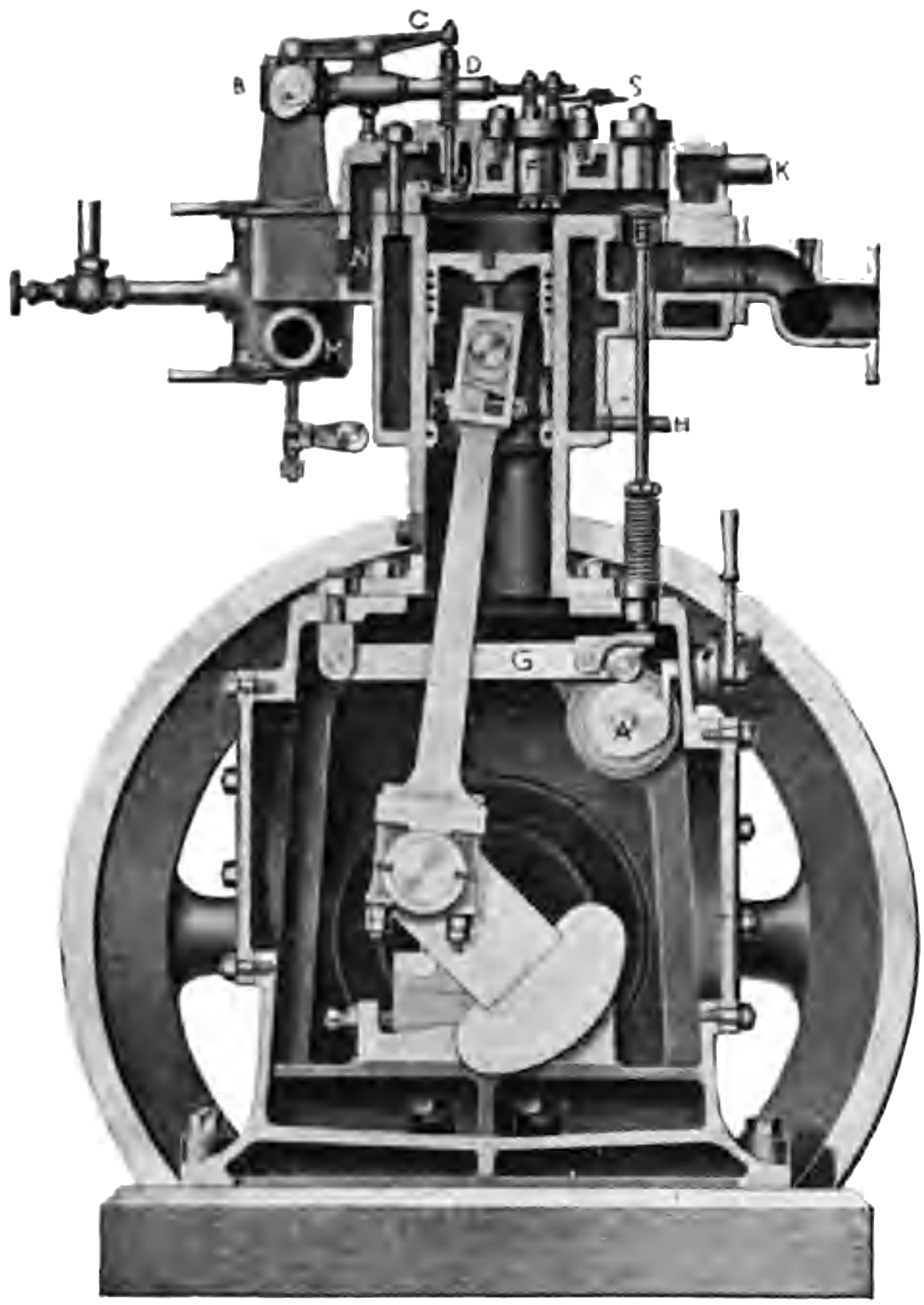

Fig. 4. Westinghouse Vertical Gas Engine, Medium Size.

G. The exhaust valve *E* has a long stem projecting downward and resting on a hardened steel plate on the upper side of the guide-lever *G*. The spring surrounding the stem serves to bring the exhaust valve back to its seat, and to keep the stem in contact with the guide lever. From the exhaust cam-shaft *A*, a horizontal shaft with bevel gears leads to the opposite side of the engine, engaging with a vertical shaft, which in turn drives the upper cam-shaft *B*. The

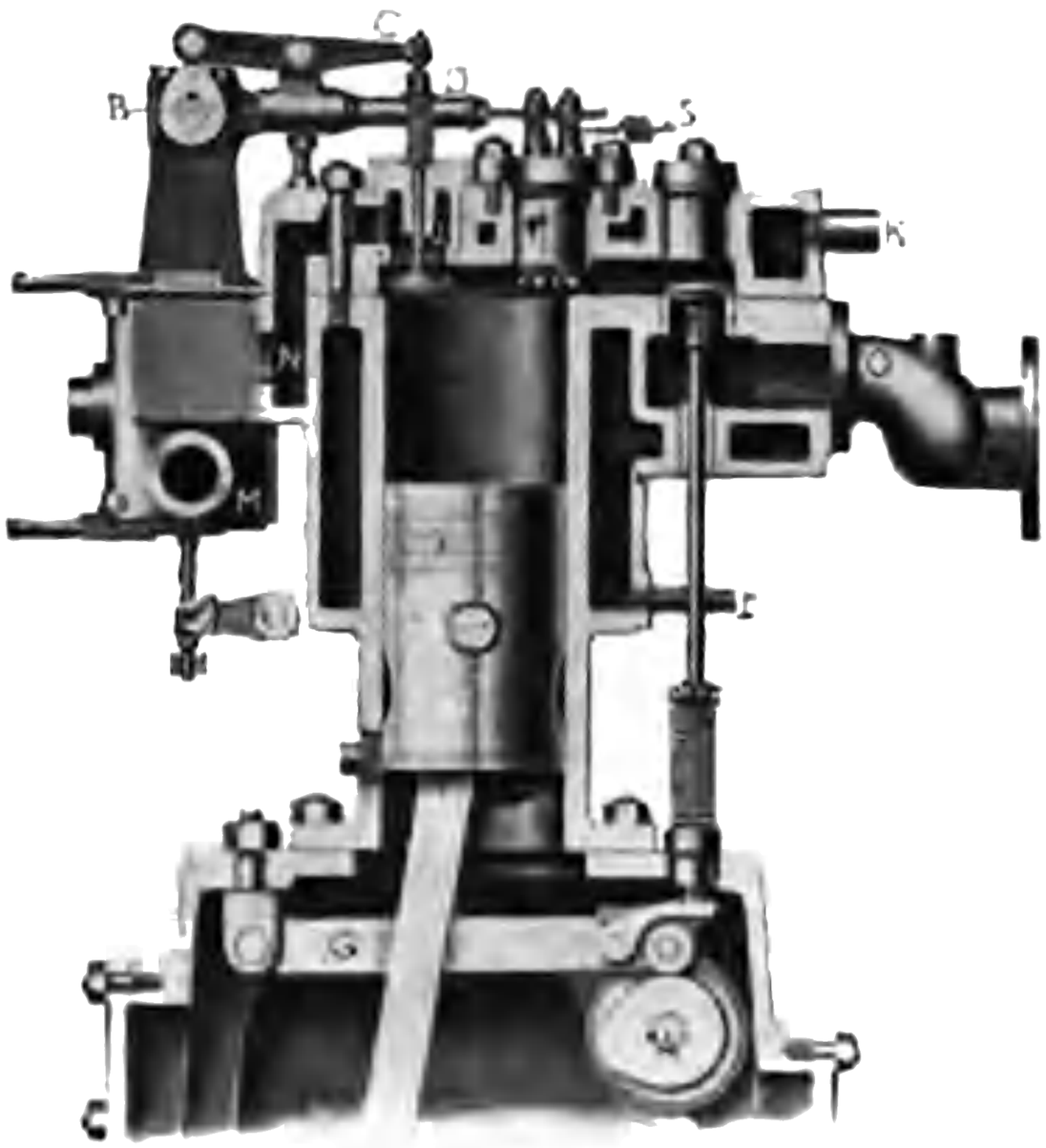

Fig. 5. Admission of the Charge.

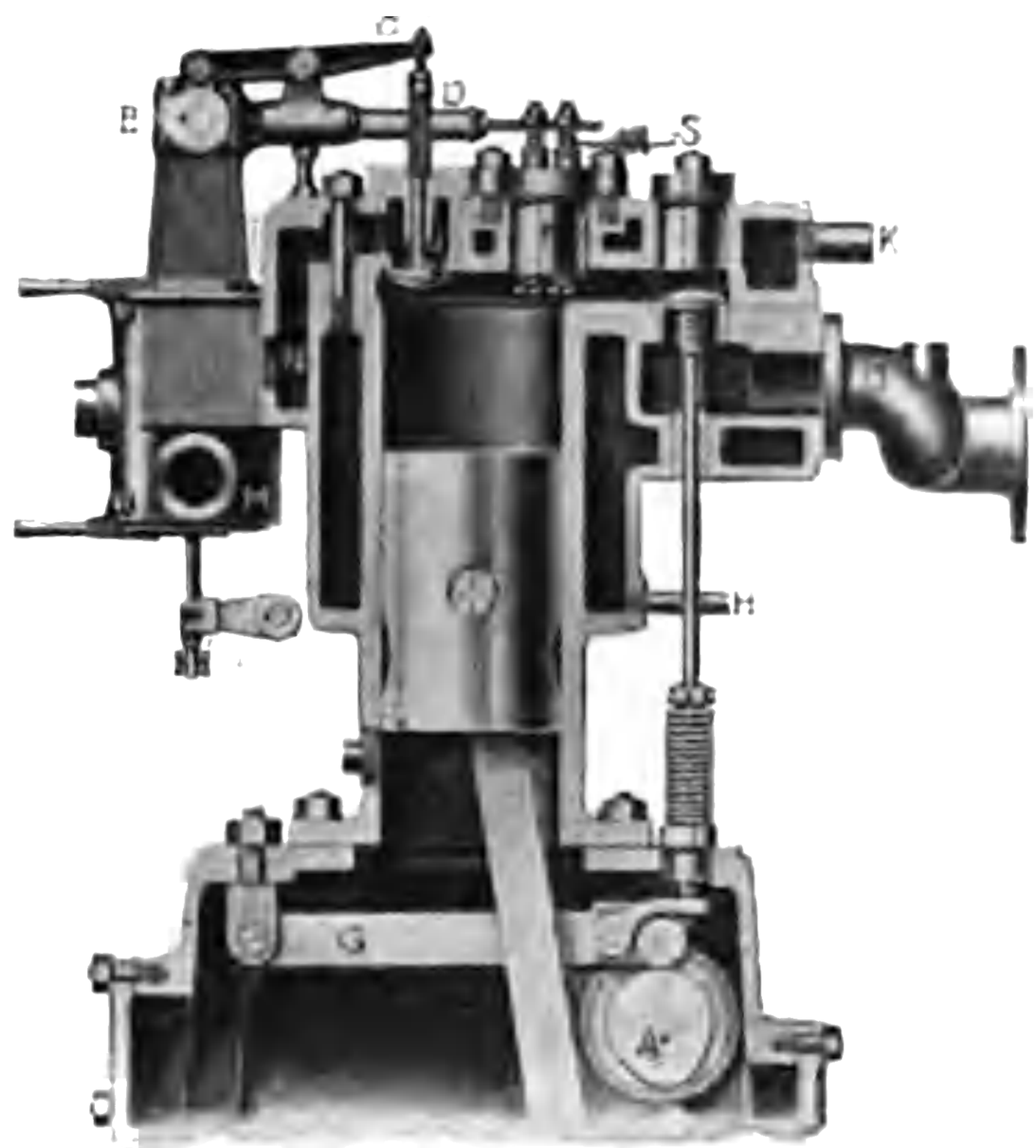

Fig. 6. Compression.

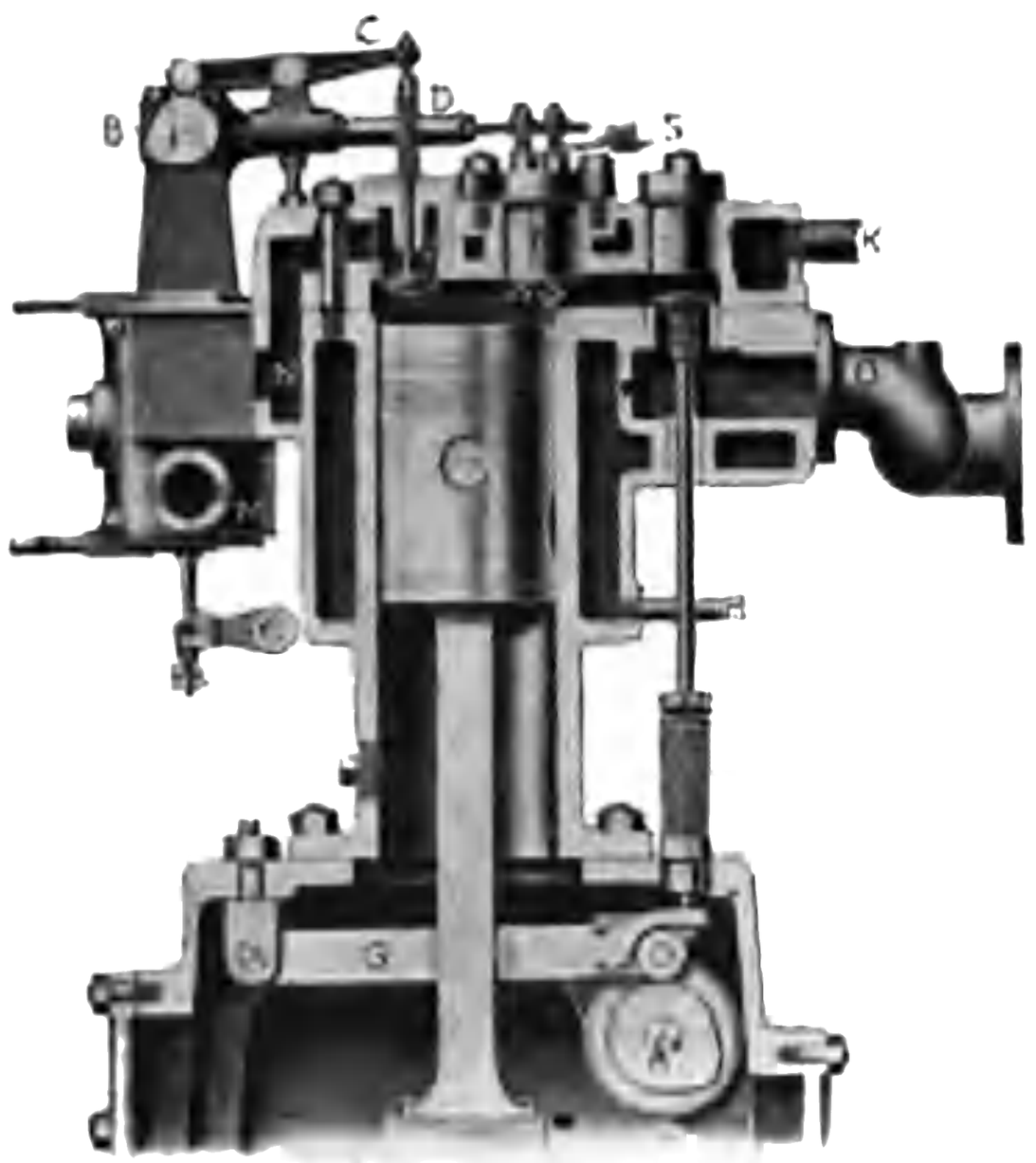

Fig. 7. Ignition.

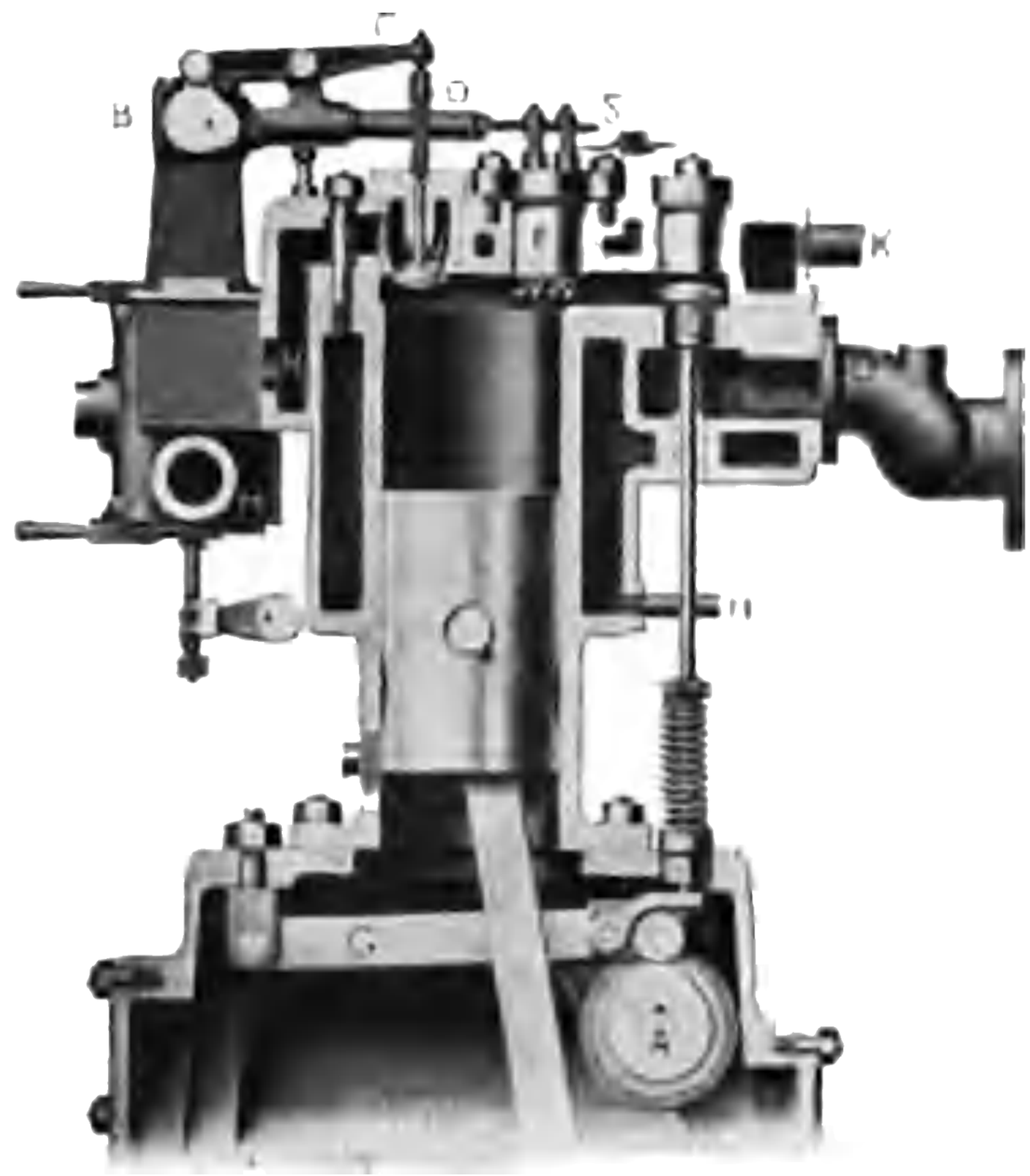

Fig. 8. Exhaust.

Purchase full membership to immediately unlock this page

HISTORY

Tens of thousands of important historical sources, many previously unobtainable, are now available for the first time with a Forgotten Books Full Membership.

Unlimited Access
$8.99/month

Continue

*Fair usage policy applies

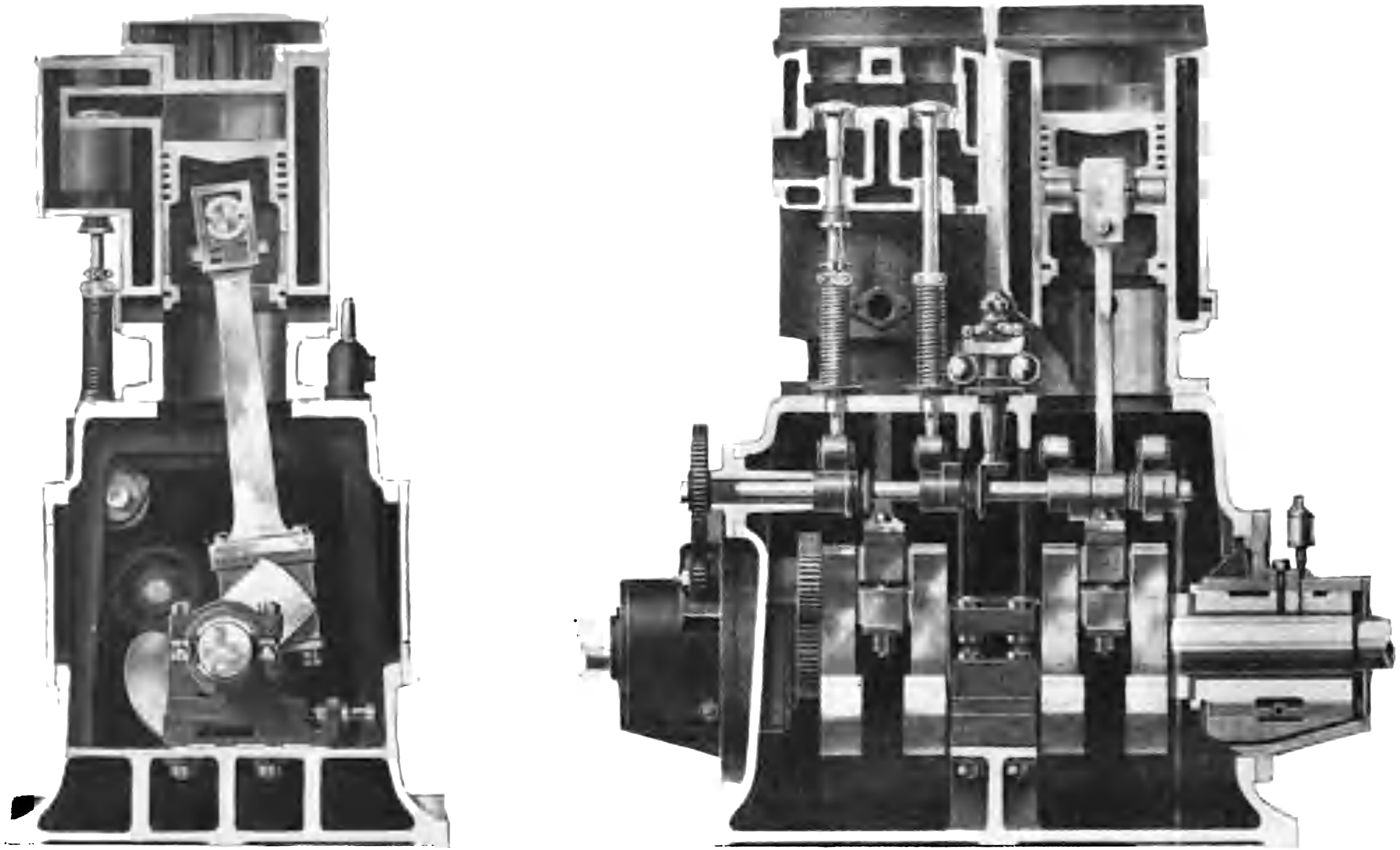

Fig. 9. Sectional Views of Weber Two-Cylinder Engine. Inlet and exhaust valves located side by side.

During the whole of the last return stroke (Fig. 8), the exhaust valve *E* remains open, and the products of combustion are forced through *O* to the atmosphere. The exhaust valve closes as the piston completes the stroke; and everything is in readiness to recommence the cycle.

An engine of similar general outline, but with the inlet and ex-

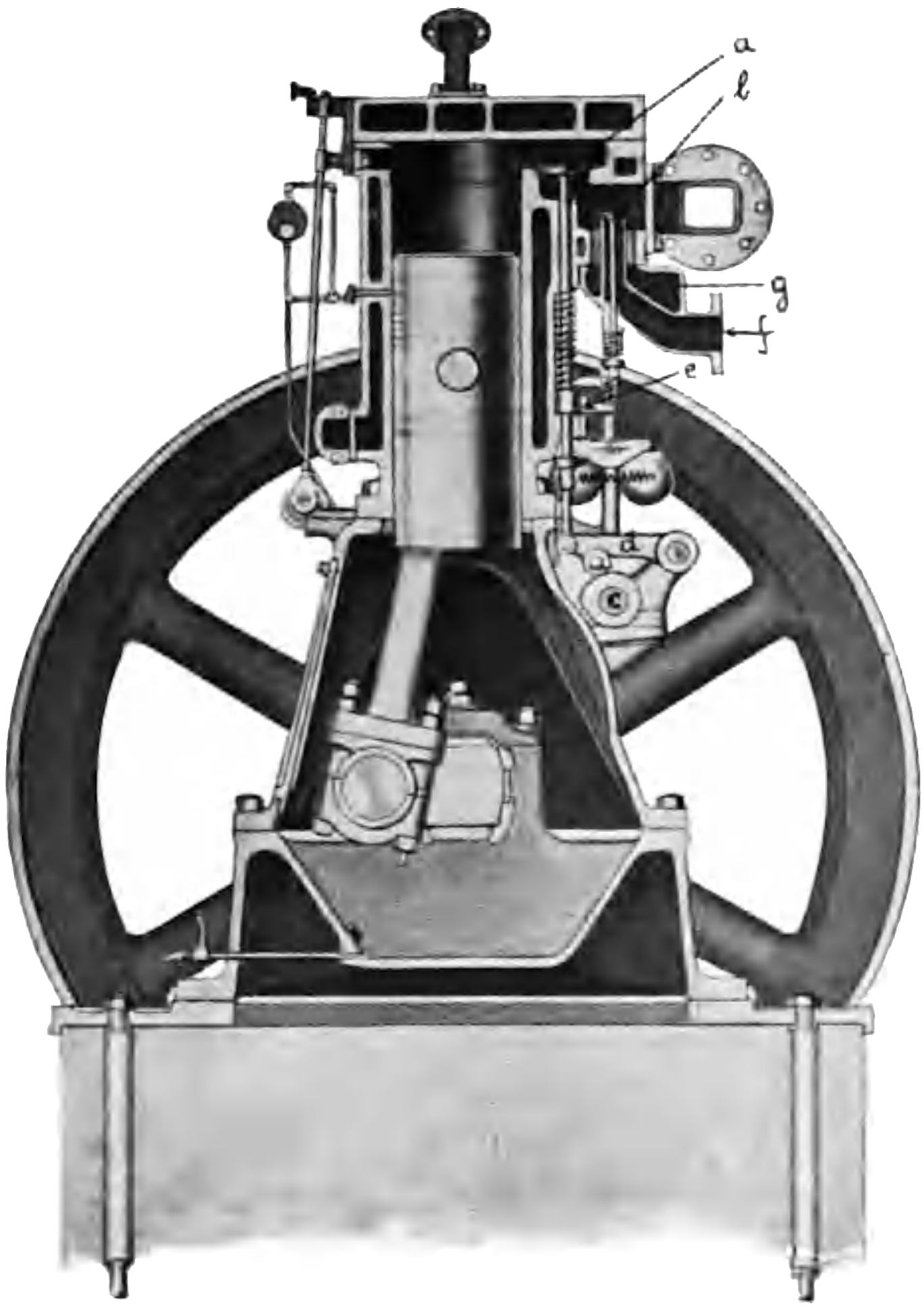

Fig. 10. Nash Vertical Gas Engine.

haust valves located side by side, is shown in Fig. 9. Both valves are operated directly from the cam-shaft by a positive motion.

Another form of vertical engine using the Otto cycle is shown in vertical section in Fig. 10. In this engine there are three valves—the inlet valve *b* for the gas, the inlet valve *a* for the explosive mixture, and the exhaust valve. All three valves are operated from the

shaft *c*, which is driven from the main shaft by spur gearing, reducing the speed to one-half that of the main shaft. A cam on the shaft *c* lifts the pivoted lever *d*, at the end of which is the long spindle of the valve *a* through which the charge is admitted. The spindle carries an arm *e*, which comes in contact with a short link on the stem of the gas-admission valve *b* whenever an explosive

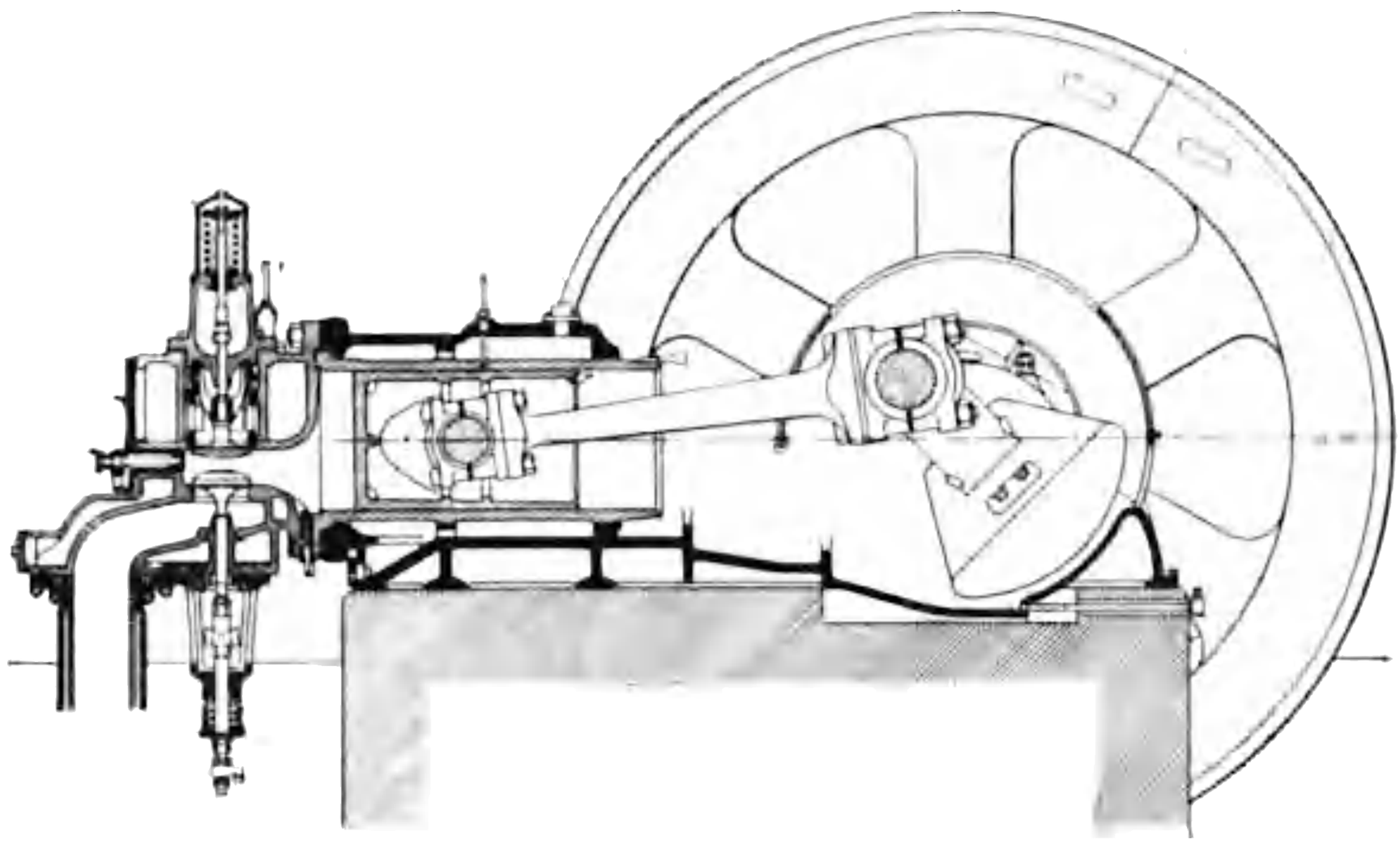

Fig. 11. Olds Gas Engine, Horizontal Type.

charge is required, so that both the valves *a* and *b* are open at the same time. The space *g* behind the valve *a* and around the valve *b* is in free communication with the atmosphere. With *a* open and the piston descending, air is drawn in and thoroughly mixed with the gas while passing through *a*. If the governor throws the short link to one side, the arm *e* does not come in contact with it, the gas valve does not open, and air alone is taken into the cylinder during the admission stroke. The exhaust valve is behind the admission valve, but is not shown in the diagram.

An example of the horizontal form of gas engine is given in Fig. 11, which is a vertical cross-section through the cylinder and valves. The admission and exhaust valves are placed vertically above one another—the exhaust being below. Both valves are opened by cams mounted on a horizontal side shaft parallel to

Purchase full membership to immediately unlock this page

DELVE INTO FANTASY, MAGIC, MYTHOLOGY & FOLKLORE

Forgotten Books' Full Membership gives access to 797,885 ancient and modern, fiction and non-fiction books.

Continue

*Fair usage policy applies

through a slotted casting, the amount of the mixture going to the engine being determined by a butterfly throttle-valve controlled by the governor as shown. The ignition is by a low-tension magneto, which is worked by a pin fastened to a disc on the camshaft, which displaces and trips the igniter lever.

An entirely different arrangement is shown in Fig. 13, where the valves are located on opposite sides of the cylinder *C*. They are both mechanically operated through cams and push-rods operating the bell-crank lever shown in the figure. The inlet valve *E* is opened by the lever *A*; the exhaust valve *D*, through the lever *K*. The igniter is placed close to the inlet valve. The provision of a plug above each valve permits ready access to the valves for removal or grinding.

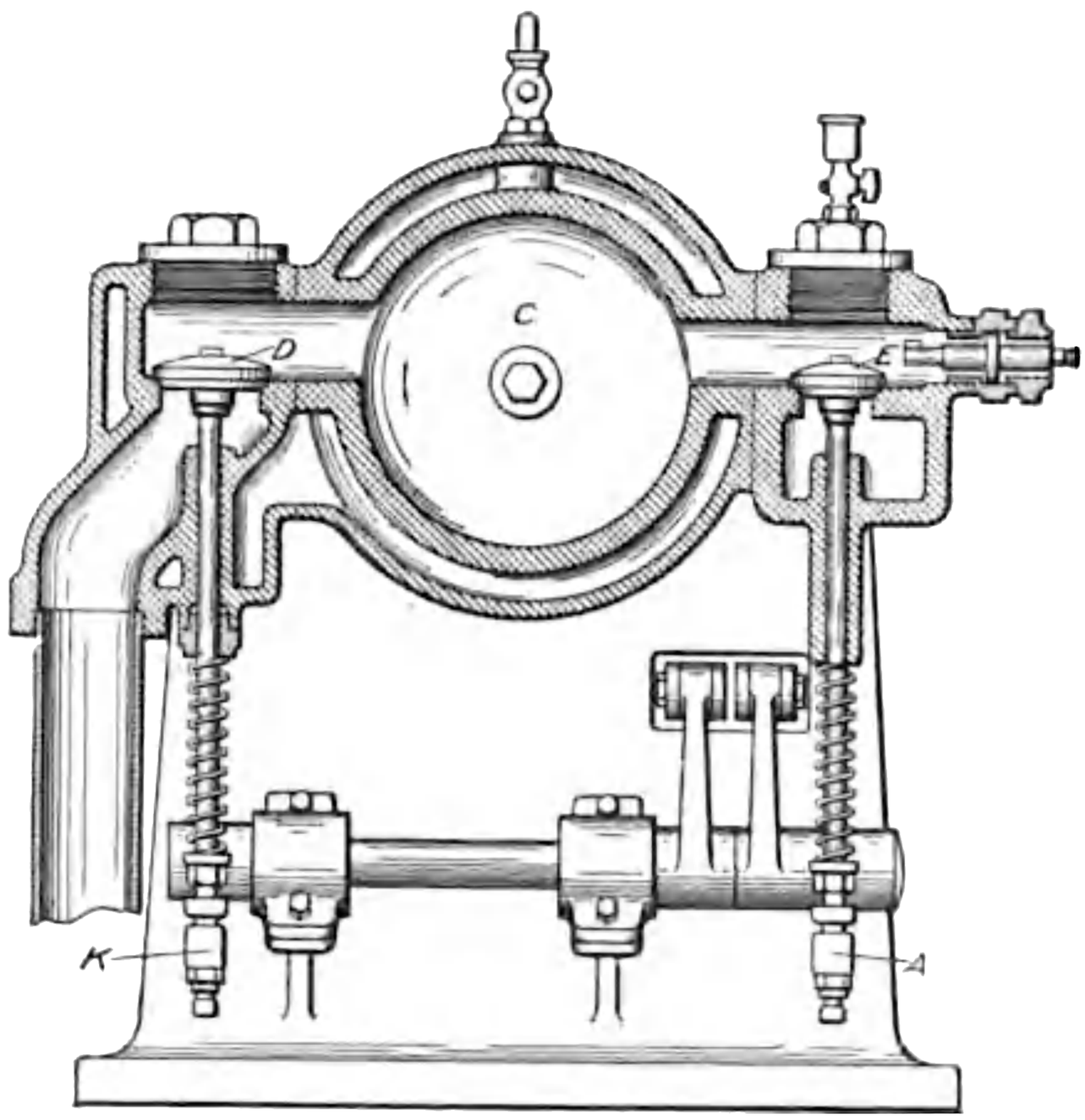

Fig. 13. Foos Gas Engine.

Another horizontal engine is illustrated in Figs. 14, 15, and 16. In this case the admission valve *B* and the exhaust valve *D* are both horizontal—a position which can be used satisfactorily only for engines of small size. The air goes to the admission valve through the pipe *N*, and is shown as taken from the base of the engine. The gas mixes with it at *H* (Fig. 15), entering through a nozzle. The amount of gas entering is controlled by the throttle-valve *A* (Fig. 16); and the time at which it enters is determined by the valve *G*, which is opened at the desired time through the action of the cam *P* (Fig. 16). The cam *P* coming in contact with the roller *Q* at the end of the lever fulcrumed at *R*, gives a movement to the rod *S* which is transmitted to the valve through the levers best seen in

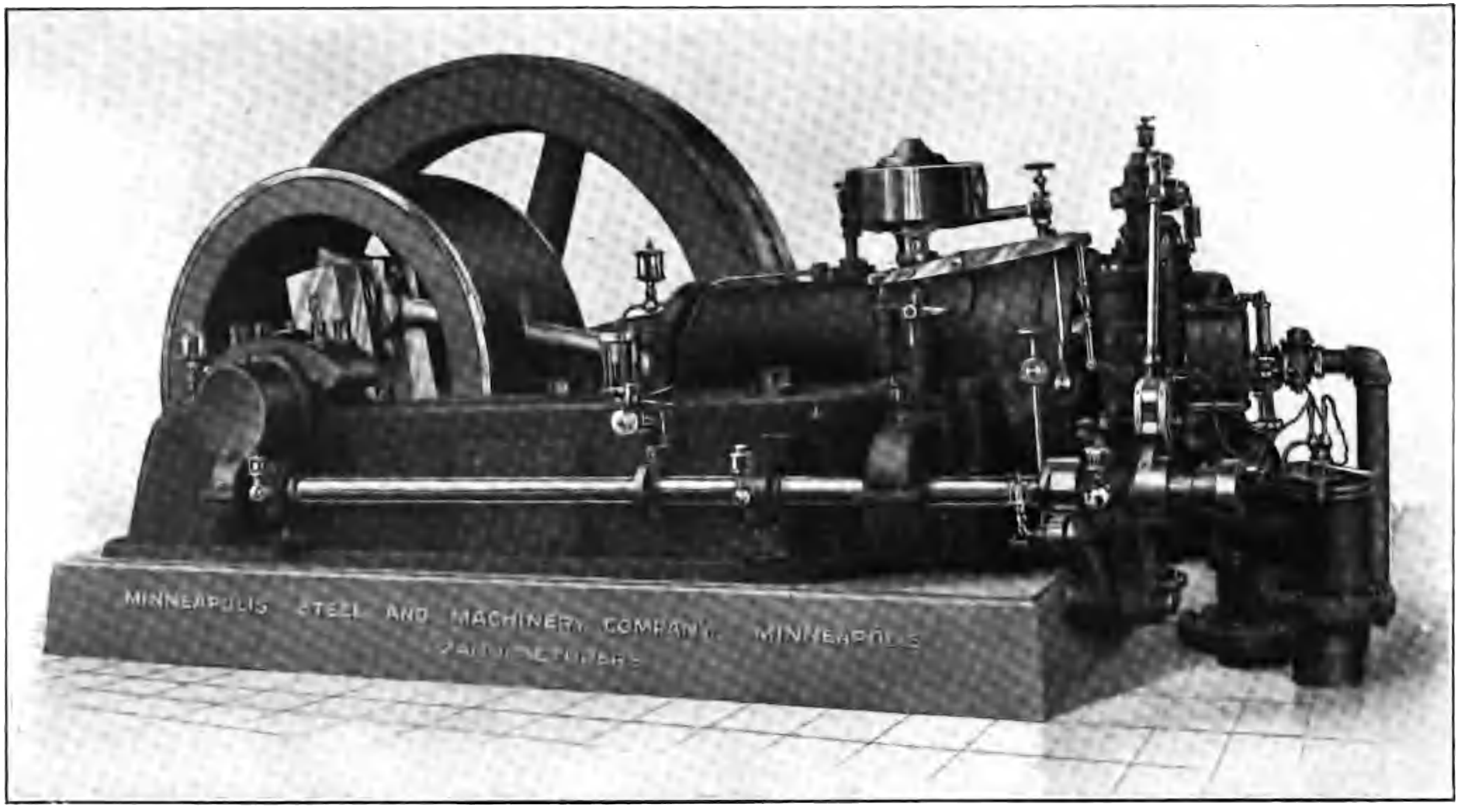

MUNZEL HORIZONTAL FOUR-CYCLE GAS ENGINE

Purchase full membership to immediately unlock this page

HISTORY

Tens of thousands of important historical sources, many previously unobtainable, are now available for the first time with a Forgotten Books Full Membership.

Unlimited Access
$8.99/month

Continue

*Fair usage policy applies

Fig. 14. The admission valve *B* is automatic in its action. The exhaust valve *D* is opened by the cam *T* (Fig. 15) acting on the roller *U* at the end of the valve-rod *W*. The valve-rod is supported near its free end by the lever *X*. Both the cams *P* and *T* are on a shaft driven from the crank-shaft by spur wheels. The governor (Fig. 14) is of the fly-wheel type, and consists of balls which are held by spiral springs, as shown, and which operate a sleeve on the main shaft. When the engine is above speed, the

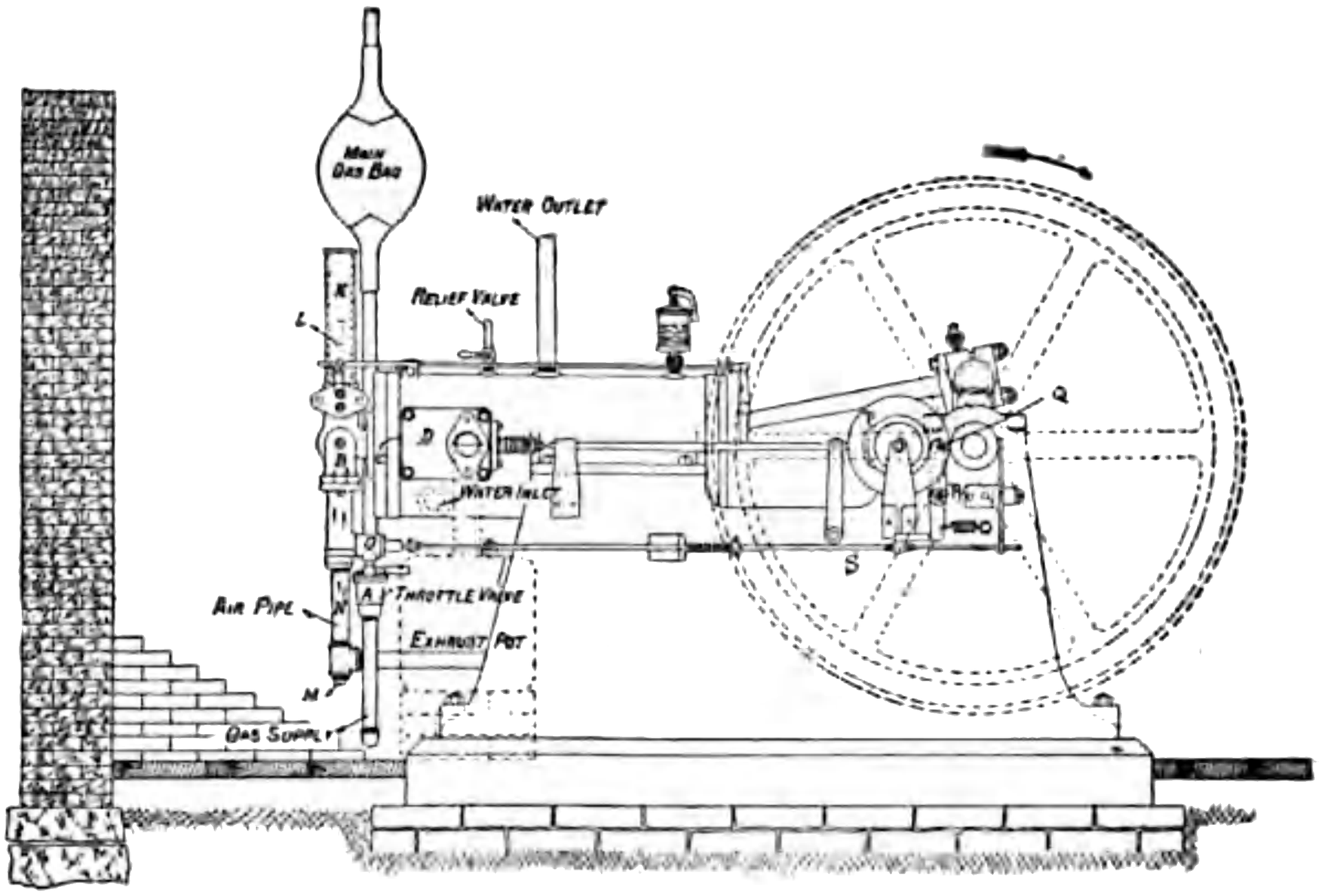

Fig. 16. Charter Engine. Side View.

movement of the sleeve throws the roller *Q* out of line with the cam *P*, and consequently there is no admission of gas to the cylinder.

Valves. The inlet and exhaust valves in gas engines are nearly always *poppet* or *mushroom* valves with conical seats similar to those shown in Figs. 5 to 16. The lift is usually about one-fourth the diameter. The exhaust valves are nearly always mechanically operated; the main inlet valves are often automatic. The automatic valve is similar in action to a pump suction valve, and is kept on its seat by a weak spring, opening only when the pressure in the cylinder is sufficiently below the atmospheric pressure to permit the latter to overcome the resistance of the spring. Consequently the suction or admission pressure in the gas engine is always low when automatic inlet valves are used. The effect is to decrease the

amount of the charge taken in, the work done by the engine, and its efficiency; the only advantage is the greater simplicity. Most small gas engines have automatic inlet valves.

A positively actuated admission valve is shown in Fig. 17. The valve is lifted by a cam *a* on the side shaft *b*, through the lever fulcrumed at *c*. The valve closes by its own weight, assisted by a spring, and is guided in its motion by a long sleeve. The valve-chest is com-

Fig. 17. Buffalo Engine. Cross-Section of Cylinder and Valve-Chest. Admission valve is positively actuated.

pletely water-jacketed. Other positively actuated inlet valves are shown in many of the preceding figures.

The pressure in the cylinder when the exhaust valve opens, is generally from 25 to 45 pounds above the atmospheric pressure, and the exhaust valve has to be lifted against this pressure. With a mushroom valve 4 inches in diameter, and with 40 pounds pressure per square inch at the end of expansion, there would be a total pressure of about 500 pounds on the valve at the time when it is to be lifted. It is desirable to reduce the strain on the valve and valve mechanism, and in large engines this is sometimes done by *balancing* the valve. A balanced exhaust valve *e* of the piston-valve type is shown in Fig. 18 in its valve-chest or housing. The connection with the cylinder

is at *d*, and the valve-seat is the conical seat *a*. A hole *f* through the valve insures the existence of atmospheric pressure on top of the valve, and the exhaust gases escape through *g* to the atmosphere. To prevent excessive heating of this valve, water is circulated through it, entering at *b* and leaving at *c*.

In smaller engines, the pressure on the exhaust valve just prior to its opening is sometimes relieved by the escape of the gases through an auxiliary exhaust port (*P*, Fig. 19) in the cylinder, which is uncovered by the piston just before it reaches the end of its out-stroke. Soon after it starts on the return stroke, the piston covers the auxiliary port, and the exhaust for the remainder of the stroke is through the regular exhaust valve. As the regular valve (not shown in the figure) is not opened till after the uncovering of the auxiliary port, there is practically only atmospheric pressure on it when it lifts. An objection to this device is that the same auxiliary port is uncovered again near the end of the admission stroke; and as the pressure in the cylinder is then less than atmospheric pressure, some of the exhaust gases enter the cylinder, mixing with the charge and diluting it. At the beginning of the return or compression stroke, part of the contents of the cylinder is forced out to the exhaust until the piston has again covered the auxiliary port; and consequently some of the charge is lost.

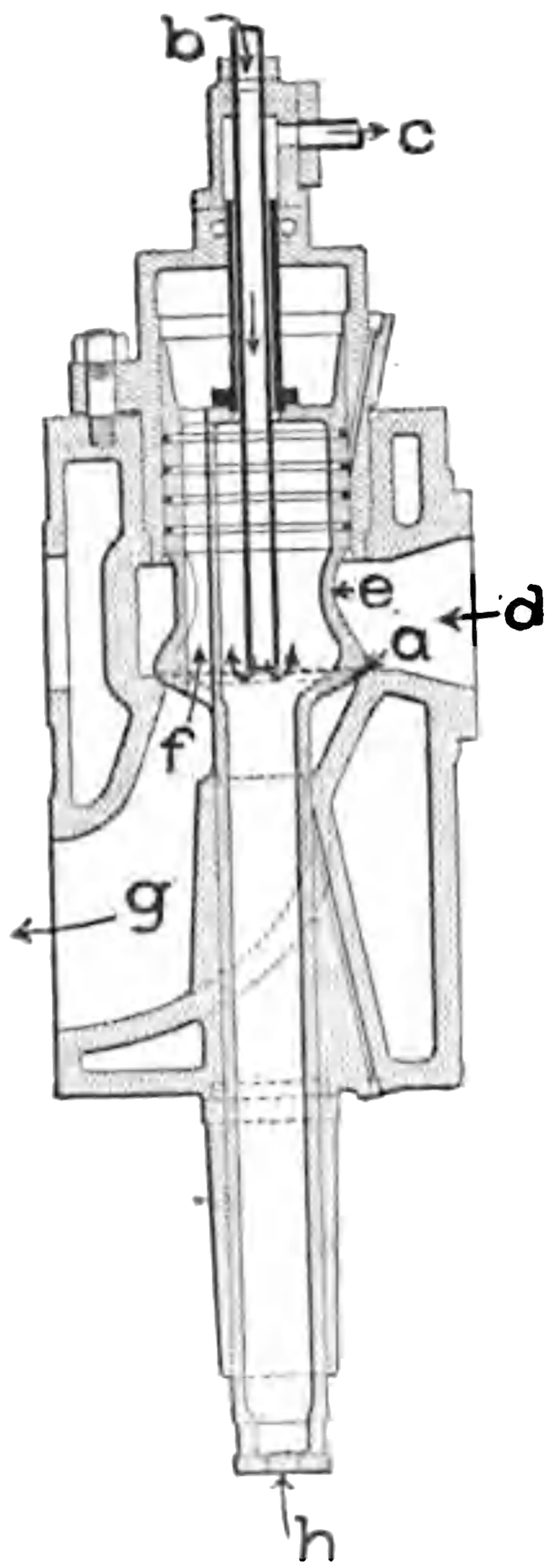

Fig. 18. Balanced Exhaust Valve.

Valve Gearing. The valves are most commonly operated by cams. Cams are preferable to eccentrics for this purpose, because they can be designed to give very prompt opening and closing. The cams are mounted upon a *lay shaft*, or *side shaft*, or *cam-shaft*. The cam-shaft is driven in different engines either by *spur gears*, *bevel gears*, or *skew gears*. The spur gear (see Fig. 15) can be used only for parallel shafts; the bevel gear, for shafts which are in the same

Purchase full membership to immediately unlock this page

DELVE INTO FANTASY, MAGIC, MYTHOLOGY & FOLKLORE

Forgotten Books' Full Membership gives access to 797,885 ancient and modern, fiction and non-fiction books.

Continue

*Fair usage policy applies

THERMODYNAMICS OF THE OTTO CYCLE

In internal-combustion motors, the explosive mixture in the cylinder consists of air mixed with a smaller volume of the gaseous or liquid fuel. For instance, if the engine uses gas supplied from the city mains, the mixture will average about eight or nine parts of air to one of gas, and should never have less than about six parts of air to one of gas. This mixture will behave, up to the time when explosion takes place, as if it were pure air. Also, the products of combustion, after the explosion is completed, have physical properties but very slightly different from those of air; and consequently the working substance in the cylinder can be regarded without serious error as consisting entirely of air. In the following discussion of what occurs in the engine cylinder, it is assumed throughout that the substance in the cylinder is air.

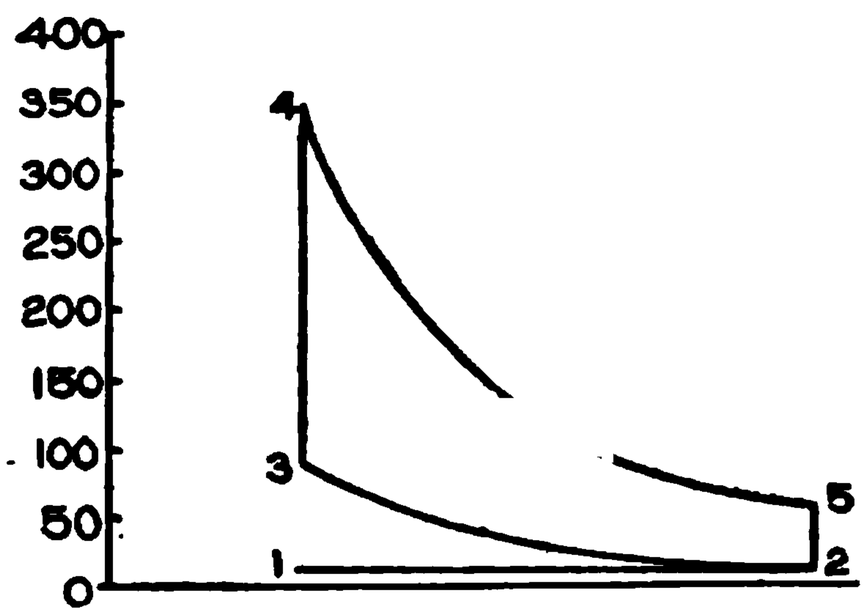

Fig. 21. Ideal Indicator Card of Otto Cycle.

Ideal Cycle. The processes taking place in the cylinder are best represented on a pressure-volume diagram. At the beginning of the cycle the piston is at the end of its path and is about to begin its out-stroke. The clearance space is full of products of combustion; the pressure is atmospheric pressure because the cylinder has been in communication with the atmosphere through the exhaust valve, which has just closed. The condition existing in the cylinder at this instant is represented in the diagram, Fig. 21, by the point 1, which is at a horizontal distance from the vertical axis representing the clearance volume, and at a vertical distance above the horizontal axis representing the atmospheric pressure of 14.7 pounds per square inch. As the piston makes its out-stroke, the admission valve opens, admitting the charge to the cylinder throughout the stroke; and as the cylinder is in communication with the outside air through the air-admission valve, the pressure in the cylinder remains atmospheric pressure throughout the stroke. On the diagram the admission is represented by the line 1–2, which is at the constant height representing the atmospheric pressure, and whose length represents the volume of the charge taken

in, which is the same as the volume through which the piston moves. The point 2 represents the condition at the end of the first stroke. The admission valve now closes, and the piston makes its return stroke. Since all the valves are closed, the charge cannot escape and is crowded into a smaller volume, while its pressure rises. The process continues till the piston reaches the end of its stroke, at which time the whole charge is compressed into the clearance space. This process is represented by the line 2–3, which shows the rise in pressure resulting from the compression. A compression of this kind, occurring without the addition or the abstraction of heat from the gas, is called an *adiabatic compression.* It causes an increase not only in the pressure but also in the temperature of the gas. It is the process which takes place in the working of an ordinary bicycle pump, and which causes its rise in temperature. The relation between the pressure of air and its volume when subject to adiabatic compression, is:

$$PV^{1.405} = \text{Constant.}$$

(Note carefully that in this equation P means the absolute pressure, and not the pressure shown by a gauge). When the charge has reached the condition represented by the point 3, it is ignited, and the heat generated by the explosion raises the temperature and consequently the pressure of the mixture. The combustion occurs so rapidly that the piston has not time to start on the out-stroke before the combustion is completed and the rise of pressure occurs, as is shown by the line 3-4, while the volume of the gas is constant. The hot products of combustion at the pressure P_4 now force the piston out, and, expanding behind it, they fall in pressure. This expansion, occurring without communication of heat to or from the gas, is *adiabatic expansion,* and is consequently accompanied by a fall in temperature of the gas. The expansion curve 4–5 is similar to the compression curve 2–3, and has the same equation.

At the point 5 the piston is at the end of the stroke, and no more expansion is possible. The exhaust valve opens, and the pressure in the cylinder falls immediately to atmospheric pressure, as shown by the line 5–2 in the diagram. Throughout the last return stroke, 2–1, the exhaust valve remains open, so that the pressure in the cylinder remains atmospheric pressure. The completed diagram,

Fig. 21, shows the whole series of pressure and volume changes occurring in a gas engine, and is such a diagram as would be taken by an indicator from a perfect engine. The area 2 3 4 5 enclosed by the diagram represents the work done by the engine per cycle.

Pressures and Temperatures. The pressures and temperatures of the working substance, and the amount of work done in an engine which exactly follows the Otto cycle, can be readily calculated. Starting at the point 2 (Fig. 21), there is present in the cylinder a volume V_2 at atmospheric pressure P_2 and at the temperature t_2, which will be assumed to be the temperature of the air as it came into the cylinder. The working substance is compressed adiabatically till it fills only the clearance volume V_3. The consequent rise in pressure can be calculated from the formula already given; but it is more simply obtained from the curve, Fig. 22, which gives the relation between the changes of volume and of pressure in adiabatic expansion or compression. The horizontal scale in this diagram is the ratio of expansion or compression, and the vertical scale shows the corresponding ratio of the pressures at the beginning and end of the expansion or compression. If, for example, the working substance expands adiabatically to five times its original volume, the pressure (which varies inversely as the volume) is shown by the curve to fall to

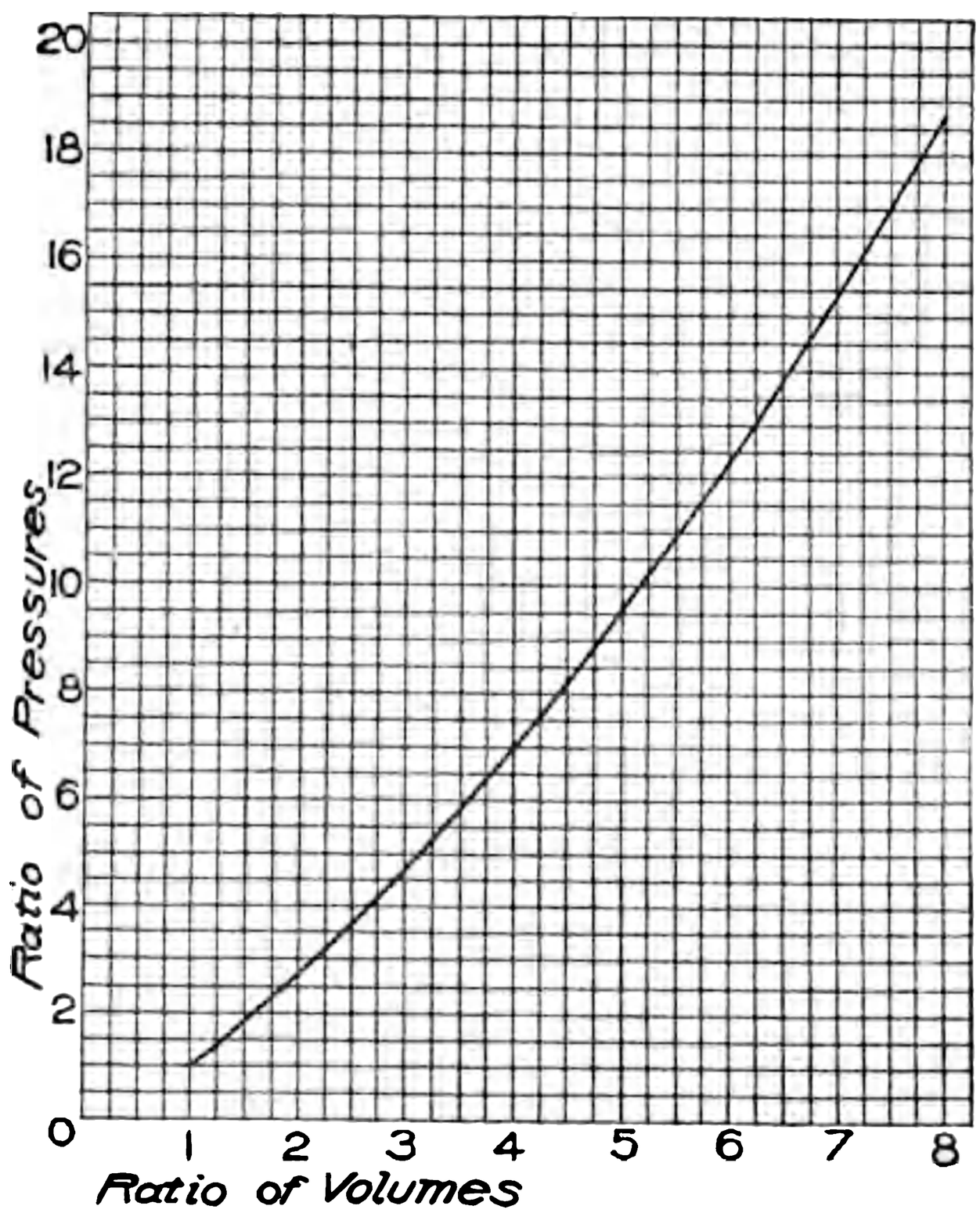

Fig. 22. Adiabatic Expansion or Compression.

Purchase full membership to immediately unlock this page

HISTORY

Tens of thousands of important historical sources, many previously unobtainable, are now available for the first time with a Forgotten Books Full Membership.

Unlimited Access
$8.99/month

Continue

*Fair usage policy applies

Also,

$$T_3 = \frac{P_3 V_3}{wR} = P_3 \frac{V_3}{V_2} \times \frac{60 + 461}{14.7 \times 144};$$

and,

$$\frac{V_3}{V_2} = \frac{1}{4};$$

$$T_3 = 103.8 \times 144 \times \frac{1}{4} \times \frac{521}{14.7 \times 144} = 919.6° \text{ absolute};$$

and,

$$t_3 = 458.6° \text{ F.}$$

The *rise in temperature during explosion* depends on how much heat is generated, which in turn depends on the strength of the explosive mixture and the heat of combustion of a cubic foot of the fuel. Let H be the heat of combustion of a cubic foot of the fuel in B. T. U., and let the mixture consist of 1 part of gas to n parts of air. The total volume of the charge taken into the cylinder each admission is:

$$V_2 - V_1 \text{ cu. ft.};$$

the volume of fuel in this charge:

$$\frac{1}{n+1}(V_2 - V_1);$$

and the heat of combustion of this fuel is:

$$Q = H \frac{V_2 - V_1}{n+1} \text{ B.T.U.}$$

This heat is utilized in raising the temperature of the gas from the known temperature T_3 to another temperature T_4. The rise in temperature can be found when the heat necessary to raise one pound of air one degree in temperature is known. This amount of heat is called the *specific heat.* It is represented by the symbol C_v (indicating that the volume is unchanged while the temperature rises), and is equal to .169 B.T.U. for air. With a weight of w pounds, the heat necessary to raise the gas one degree in temperature is:

$$wC_v \text{ B.T.U.}$$

To raise the temperature $T_4 - T_3$ degrees, the heat supply is:

$$w\,C_v\,(T_4 - T_3) \text{ B.T.U.},$$

and the heat of combustion is used entirely in raising the gas from T_3 to T_4.

$$\therefore \quad H \frac{V_2 - V_1}{n+1} = w\, C_v\, (T_4 - T_3)$$

$$= \frac{P_2 V_2}{R T_2} C_v\, (T_4 - T_3);$$

$$T_4 - T_3 = \frac{H}{n+1} \times \frac{R T_2}{P_2} \times \frac{1}{C_v} \times \frac{V_2 - V_1}{V_2}.$$

Example. In the previous problem, if the charge taken in consists of 1 part of gas to seven parts of air, and the heat of combustion of the gas is 640 B.T.U. per cubic foot, find the temperature at the end of explosion.

Solution—

$$\frac{V_2 - V_1}{V_2} = \frac{V_2 - \frac{1}{4} V_2}{V_2} = \frac{3}{4};$$

$$T_4 - T_3 = \frac{640}{8} \times \frac{53.2 \times 521}{14.7 \times 144} \times \frac{1}{.169} \times \frac{3}{4};$$

$$\therefore \quad T_4 = 4{,}649 + T_3$$

$$= 5{,}568.6^\circ \text{ absolute};$$

$$\therefore \quad t_4 = 5{,}107.6^\circ \text{ F.}$$

If a perfect gas is raised in temperature while its volume is unchanged, the absolute pressure will increase in exact proportion to the rise of absolute temperature; or,

$$P_4 : P_3 :: T_4 : T_3$$

$$\therefore \quad P_4 = \frac{T_4}{T_3} P_3.$$

Example. What is the pressure at the end of explosion in the preceding problem?

Solution—

$$P_4 = \frac{T_4}{T_3} P_3$$

$$= \frac{5{,}568.6}{919.6} \times 103.8 \text{ lbs. per sq. in., absolute}$$

$$= 628.6 \text{ lbs. per sq. in., absolute.}$$

The *pressure and temperature at the end of the adiabatic expansion* can be found most simply, after the other pressures and temperatures are known, by making use of a relation which exists between the pressures and temperatures at the points 2, 3, 4, 5.* These relations are:

$$\frac{P_2}{P_3} = \frac{P_5}{P_4};$$

* The ratio of the pressures $\frac{P_4}{P_5}$ can be obtained from the curve, Fig. 22, since the ratio of the volumes $\frac{V_5}{V_4}$ is known. But $V_5 = V_2$; therefore $\frac{V_5}{V_4} = \frac{V_2}{V_3}$, and $\frac{P_4}{P_5} = \frac{P_4}{P_6}$.

and,

$$\frac{T_2}{T_3} = \frac{T_5}{T_4}.$$

Example. What are (*a*) the pressures, and (*b*) the temperatures, at the end of the adiabatic expansion in the preceding problem?

(*a*) $P_5 = \frac{P_2}{P_3} \times P_4 = 89$ lbs. per sq. in., absolute.

(*b*) $T_5 = \frac{T_2}{T_3} \times T_4 = 3{,}155°$ absolute $= 2{,}694°$ F.

The *work done* by any heat engine is equal to the difference beween the heat that goes to the engine and that which is rejected by the engine, because whatever heat disappears cannot have been destroyed and must have been converted into work. In the Otto cycle, the heat taken in has been seen to be:

$$Q = wC_v\,(T_4 - T_3) \text{ B.T.U.}$$

Heat is rejected from the engine only during the process represented by the line 5–2, because, when the charge gets back to the condition 2, it has returned to its original volume and pressure, and consequently to its original temperature. The heat rejected is then:

$$Q_R = wC_v\,(T_5 - T_2) \text{ B.T.U.}$$

And consequently the work done per cycle is:

$$W = Q - Q_R \text{ B.T.U.} = 778\,(Q - Q_R) \text{ foot-pounds.}$$

The *efficiency of the cycle*—that is, the fraction of the heat supplied that is converted into work—is:

$$E = \frac{W}{Q} = \frac{Q - Q_R}{Q}$$

$$= 1 - \frac{Q_R}{Q}$$

$$= 1 - \frac{T_5 - T_2}{T_4 - T_3}.$$

And since, as already stated,

$$\frac{T_5}{T_4} = \frac{T_2}{T_3},$$

we get:

$$\frac{T_5 - T_2}{T_4 - T_3} = \frac{T_2}{T_3};$$

therefore,

$$E = 1 - \frac{T_2}{T_3}.$$

Purchase full membership to immediately unlock this page

DELVE INTO FANTASY, MAGIC, MYTHOLOGY & FOLKLORE

Forgotten Books' Full Membership gives access to 797,885 ancient and modern, fiction and non-fiction books.

Continue

*Fair usage policy applies

2. What is the temperature at the end of compression?

Ans. 539° F.

3. If the charge consists of 1 part of gas to 9 parts of air, and the heat of combustion of the gas is 600 B.T.U. per cubic foot, what is the temperature at the end of explosion?

Ans. 4,258° F.

4. What is the pressure at the end of explosion?

Ans. 665.9 lbs. per square inch, absolute.

5. What are the pressure and temperature at the end of the expansion? Ans. 69.4 lbs. per square inch, absolute. 1,997° F.

6. What is the efficiency of the cycle? Ans. .479.

7. If the cylinder diameter is 18 inches, the stroke 24 inches, and the engine makes 150 revolutions per minute, what is the I.H.P.?

Ans. 180 I.H.P.

TABLE I

Effects of Clearance

Percentage Clearance of Otto Cycle Engine	Pressure at End of Compression Lbs. per Sq. In.	Efficiency of Otto Cycle	Efficiency of Cycle with Increased Expansion, but with Same Compression Pressure as Otto Cycle
20	183.3	51.6	60.9
25	141.1	47.9	58.4
30	115.4	44.8	55.0
35	98.0	42.1	52.5
40	85.5	39.8	50.4

An examination of the equation for the efficiency of the Otto cycle,

$$E = 1 - \frac{T_2}{T_3},$$

brings out certain important results. The efficiency is seen to depend only on the ratio of the temperatures at the beginning and end of the compression, and not at all upon the temperature and pressure at the end of explosion. Since the ratio of the temperatures at the beginning and end of compression depends only upon the ratio of compression, and since, further, the charge is always compressed till it occupies the clearance volume, the efficiency is seen to depend only upon the percentage clearance. In other words, in engines

with the same percentage clearance using the Otto cycle, the percentage of the heat liberated in the cylinder that is converted into work is always the same, whatever be the size of the engine or the strength of the charge. The effect of the clearance on the efficiency is exhibited in Table I, where it is seen that the smaller the clearance the greater is the efficiency of the engine. The pressures at the end of compression are also given in the table, and are calculated on the assumption that the atmospheric pressure is 14.7 pounds per square inch, absolute.

Otto Cycle with Increased Expansion. The pressure at the end of expansion is seen in the example worked out, to be 89 pounds per square inch, absolute. In ordinary practice it is commonly found to be from 50 to 60 pounds, absolute. It is evident that if the gas were permitted to expand further, it would do more work and consequently would increase the efficiency of the cycle. The indicator card, Fig. 23, shows one method used for obtaining more expansion. The charge enters at atmospheric pressure from 1 to 2, when the admission is cut off. The piston continues moving forward to the end of its stroke, but as no more admission takes place the charge expands adiabatically to 3, while its pressure falls. On the return stroke the charge is compressed adiabatically, retracing the expansion path along 3–2, and continuing till the whole charge is compressed into the clearance space at 4. The rest of the cycle is unchanged. The diagram 1 2 4 5 8 2 represents the ordinary Otto cycle, and the shaded area 8 6 7 2 represents the increase in work due to the increased expansion. The efficiency of this cycle can be easily calculated, and the results of such calculations are given in Table I. They are made on the assumption that the charge is admitted for only one-half the stroke, and that the heat of combustion is 80 B.T.U. per cubic foot of the charge. An inspection of the table shows the increase in efficiency which results from the increased expansion, for engines which have the same pressures at the end of

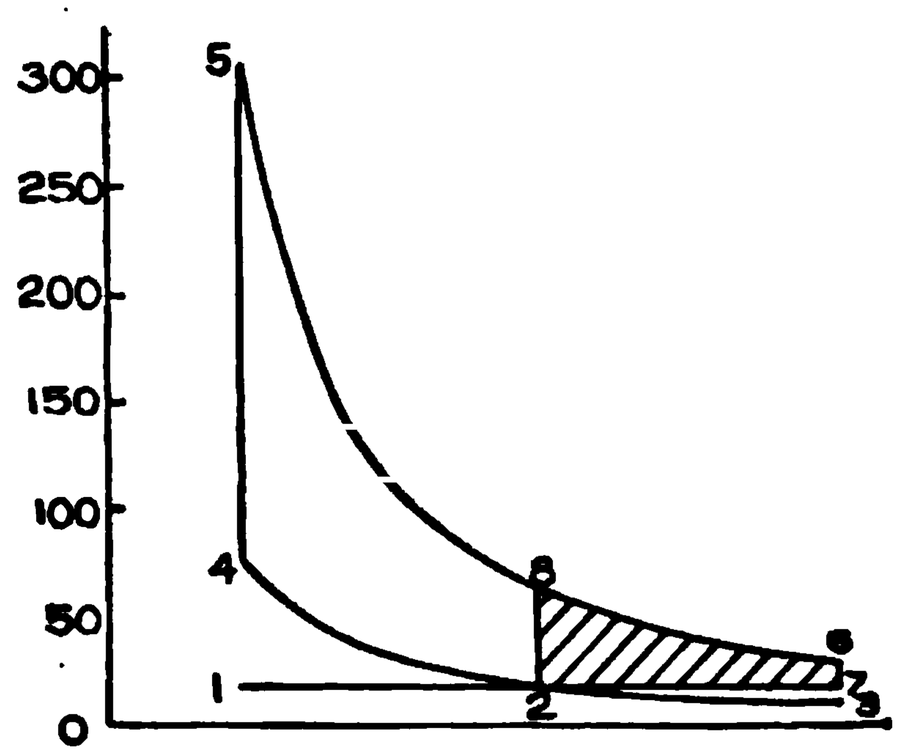

Fig. 23. Method of Increasing Expansion.

compression; and indicates that, to be of high efficiency, a gas engine of this type should first compress the charge to a high pressure, and should then expand the products of combustion to a volume considerably in excess of the original volume of the charge.

Ideal and Real Otto Cycles. The calculations in the preceding pages are made on the assumption that the gas engine follows the Otto cycle exactly, in which case the engine is called an *ideal* engine. The *real* engine does not exactly follow the Otto cycle, because of certain practical difficulties. Differences between the real and the ideal engine occur in each part of the cycle. During admission (Fig. 24,

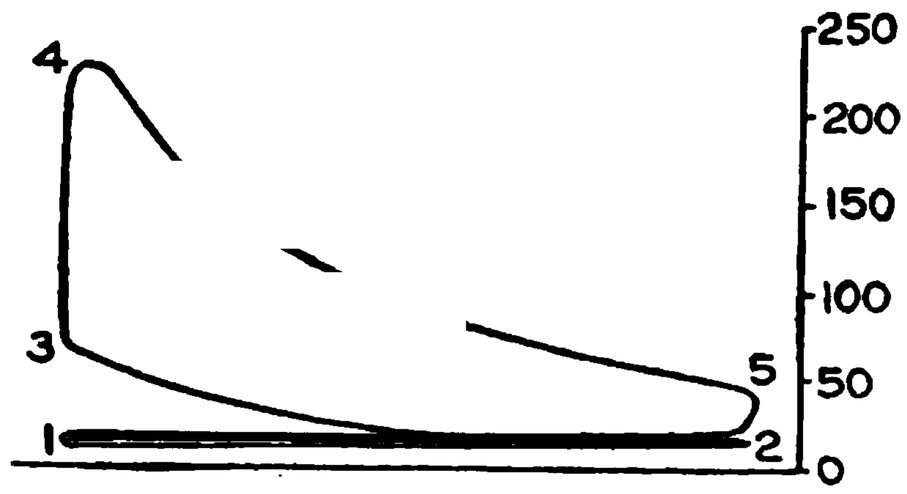

Fig. 24. Indicator Card from Otto-Cycle Engine.

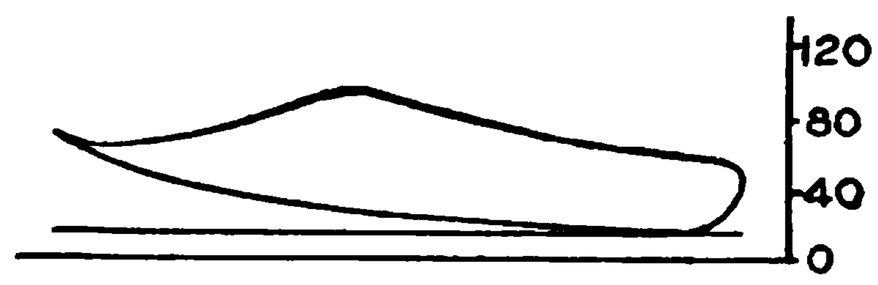

Fig. 25. Indicator Card with Weak Mixture.

line 1–2), the pressure in the cylinder is actually a pound or more below the atmospheric pressure, that difference being necessary to open the air-admission valve (when automatic) and to cause the air to flow in with sufficient velocity. The charge, moreover, is heated by contact with the cylinder walls and with the hot gases remaining in the clearance. The compression is not adiabatic, because it occurs in a cast-iron cylinder, which takes heat from the gas while it is being compressed and so makes the final temperature and pressure less than that calculated on the assumption of adiabatic expansion. The difference, generally, is not very great.

The explosion in the real engine is neither instantaneous nor complete. It approximates more closely to the ideal explosion, when the compression is considerable and when the explosive mixture has only a small excess of air present. With weaker mixtures, the explosion becomes slower and less complete, as shown in Fig. 25, till, with the weakest explosive mixture, the process is really one of slow combustion taking place throughout the whole of the expansion period, and some of the charge may be still unburned when exhaust takes

Purchase full membership to immediately unlock this page

HISTORY

Tens of thousands of important historical sources, many previously unobtainable, are now available for the first time with a Forgotten Books Full Membership.

Unlimited Access
$8.99/month

Continue

*Fair usage policy applies

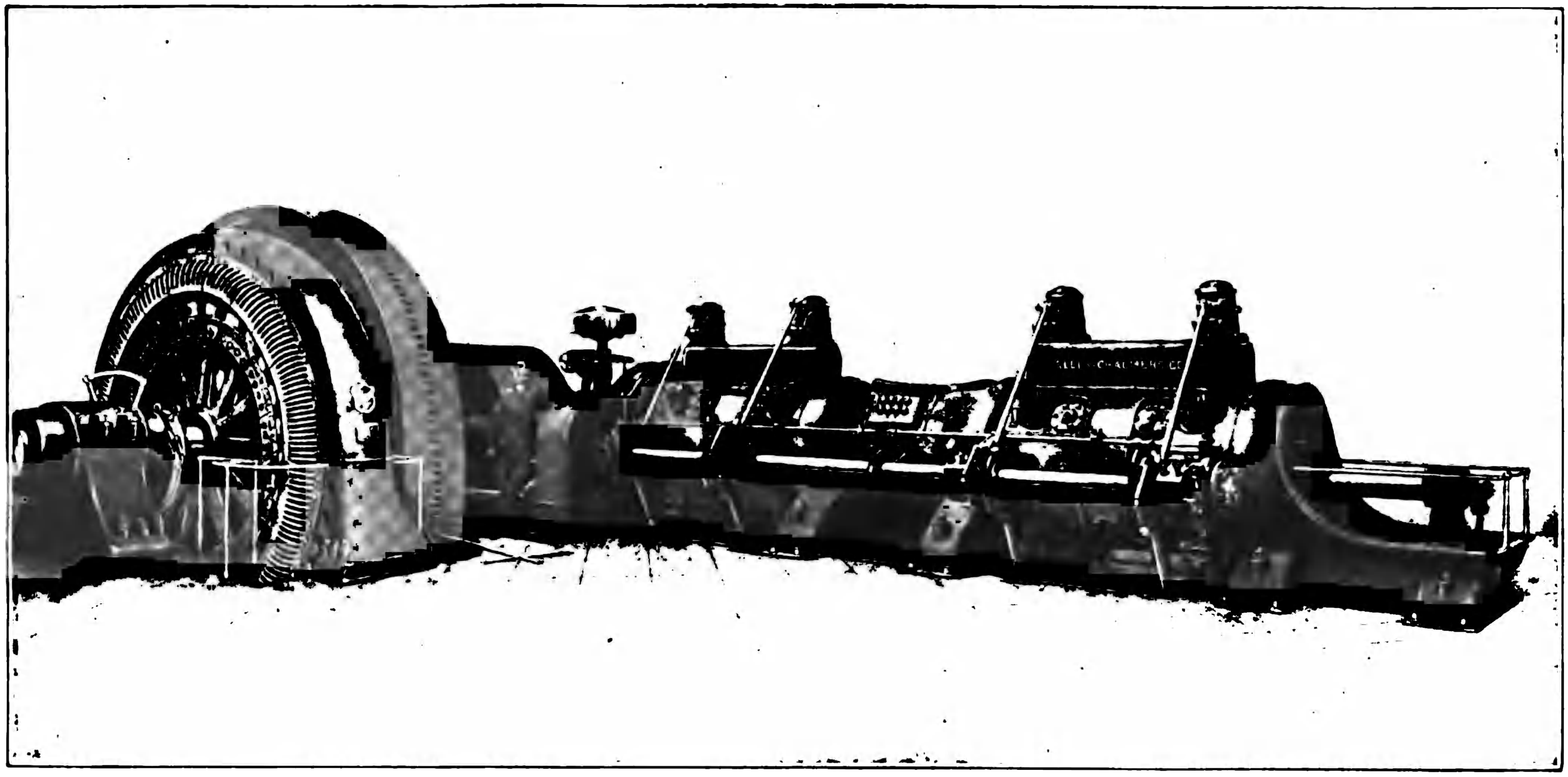

ALLIS-CHALMERS GAS ENGINE DIRECT-CONNECTED TO ALLIS-CHALMERS ALTERNATING-CURRENT GENERATOR

place. Even under the best conditions, the rise of temperature, and consequently of pressure, during the explosion, is only about six-tenths of that occurring in the ideal engine. This, it will be seen, makes the power of the real engine considerably less than that of the ideal. The water jacket around the cylinder, without which the cylinder would be too hot to be properly lubricated, is one of the important causes of the difference between the real and ideal cycles. as the jacket absorbs usually about forty per cent of the total heat of the combustion.

The expansion curve is above the adiabatic in real engines, because the cylinder walls that have been heated by the explosion give back some heat to the gases, and also because the combustion still continues and liberates more heat. This last effect is especially marked when the explosive mixture is weak.

Finally, the exhaust, as in the steam engine, begins a little before the end of the expansion stroke, so as to give plenty of time for the escape of the gases; and the pressure in the cylinder during the exhaust stroke is necessarily higher than that of the atmosphere into which the gases are rejected.

The total effect of all these differences between the real and the ideal engine is that the work done in an actual engine in good condition is only from five-tenths to six-tenths of that which the ideal engine would do; or, in other words, the efficiency of the real engine is only from five-tenths to six-tenths that of the ideal engine.

Example. What are the probable actual efficiency, horse-power, and gas consumption of the engine whose ideal performance has been worked out in the preceding examples? Assume the real engine to have $\frac{6}{10}$ the efficiency of the ideal engine.

Solution—

The ideal efficiency was found to be .433; therefore,

$$\text{Probable real efficiency} = .6 \times .433 = .26.$$

The ideal horse-power was found to be 120.3; therefore,

$$\text{Probable real H. P.} = .6 \times 120.3 = 72.2, \text{ nearly.}$$

The gas consumption is expressed in cubic feet per I.H.P. per hour. In the ideal engine the volume of gas taken in per cycle was:

$$\frac{V_2 - V_1}{n + 1} = \frac{1.178}{8} = .147 \text{ cu. ft.}$$

The number of cycles per minute was 125. Therefore,

$$\text{Gas used per minute} = .147 \times 125 = 18.4 \text{ cu. ft.}$$
$$\text{Gas used per hour} = 18.4 \times 60 = 1{,}104 \text{ cu. ft.}$$

And the probable real I.H.P. is 72.2; therefore,

$$\text{Gas used per I. H. P. per hour} = \frac{1{,}104}{72.2} = 15.3 \text{ cu. ft.}$$

EXAMPLE FOR PRACTICE

What are the probable actual efficiency, I.H.P., and gas consumption of the engine whose ideal performance has been worked out in the previous examples for practice.

ANSWERS: .287 efficiency.
108 I.H.P.
14.71 cu. ft. gas consumption.

Indicated Horse-Power. The indicated horse-power of the normal Otto-cycle gas engine is determined from the area of the indicator card, just as with the steam engine; but there are some special points to which attention must be paid. In the usual formula,

$$\text{I. H. P.} = \frac{PLAN}{33{,}000},$$

N is the number of cycles per minute, not the number of revolutions. The mean effective pressure P is obtained from the indicator card by going around it with a planimeter in the way in which it was traced—that is, in the order 1–2–3–4–5–1 (Fig. 24). The indicator card consists really of two areas or loops, of which 3–4–5 represents positive work, and 1–2 negative work. The total work done on the piston is represented by the difference between these two areas. The small area 1–2 represents the work done in overcoming the friction resistance of the gas when being admitted to and expelled from the cylinder. It is work that has to be done by the engine, is a definite loss of power, and should be made as small as possible. The area 3–4–5 is the work that is actually done on the piston, less the work required to compress the gas; it is the true work of the cycle, all of which would be available for driving the engine were it not for the gas-friction resistances represented by the area 1–2. If a planimeter is made to trace the diagram in the order in which it was drawn, it will go around the area 1–2 and 3–4–5 in opposite directions; that is, if it goes around one clockwise, it will go around the

Purchase full membership to immediately unlock this page

DELVE INTO FANTASY, MAGIC, MYTHOLOGY & FOLKLORE

Forgotten Books' Full Membership gives access to 797,885 ancient and modern, fiction and non-fiction books.

Continue

*Fair usage policy applies

use in engines using the Otto cycle. The first is by bringing the explosive mixture into contact with some surface which is kept at a temperature sufficiently high to cause ignition; the second is by means of an electric arc. A *hot tube* is the common device when the first method of ignition is used. The tube *E* (Fig. 28) is closed at the upper end, and communicates at its lower end through the port *B* with the cylinder *A*. It is heated by an external flame from the Bunsen burner *C*, and is maintained at a full red heat. The chimney around the tube is lined with asbestos, and keeps the flame in good contact with the tube. During the admission stroke the tube is filled with products of combustion at atmospheric pressure remaining from the previous explosion. As compression goes on, the non-explosive products of combustion are crowded into the upper part of the tube, while part of the explosive mixture in the cylinder is compressed into the lower part of the tube. The length of the tube and the position of the flame are adjusted by experiment, so that the explosive charge will just reach the hot portion of the tube and be ignited at the moment when ignition is desired. Shortening the tube makes the ignition come later. With this device the actual time of ignition is not very definite. It depends on the temperature of the tube, the position of the Bunsen flame, the strength of the mixture and the amount of compression. As these last two quantities are purposely varied by the governor in some engines, irregular timing would result from its use in such cases.

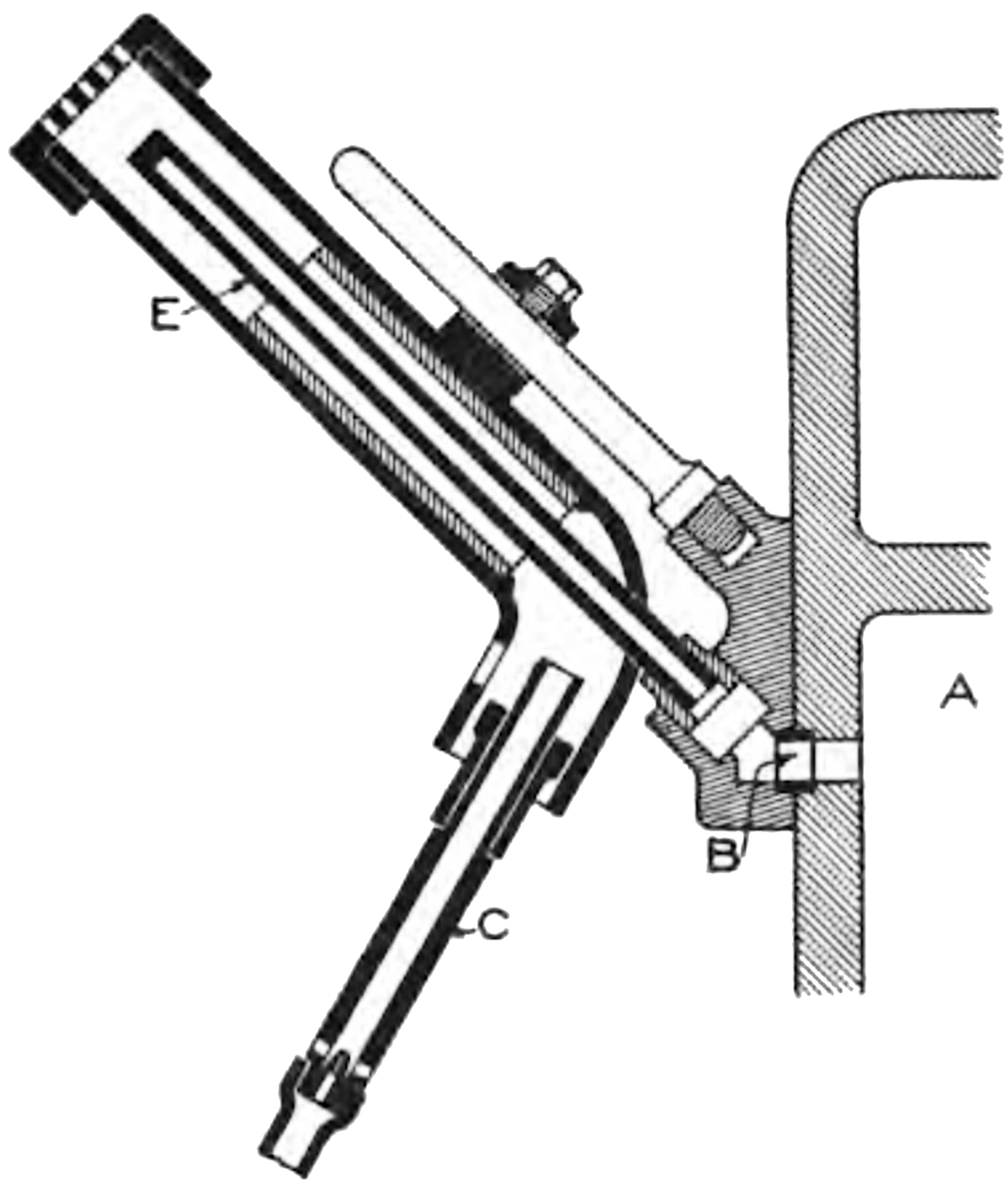

Fig. 28. Hot-Tube Igniter.

The irregularity of timing with the hot-tube igniter can be partly remedied by the use of a *timing valve*. The timing valve *B* (Fig. 29)

is held on its seat by a spiral spring *D* until ignition is desired, when, by a movement of the bell-crank lever *E*, the valve opens and the compressed charge in the cylinder *A* gets access to the hot tube *C*. The valve *B* is kept open till the end of the exhaust stroke. The tubes are preferably made of nickel alloy or of porcelain, but the latter is very brittle and apt to break when being fastened in place. Iron tubes are used sometimes, but they burn out rapidly and are unreliable.

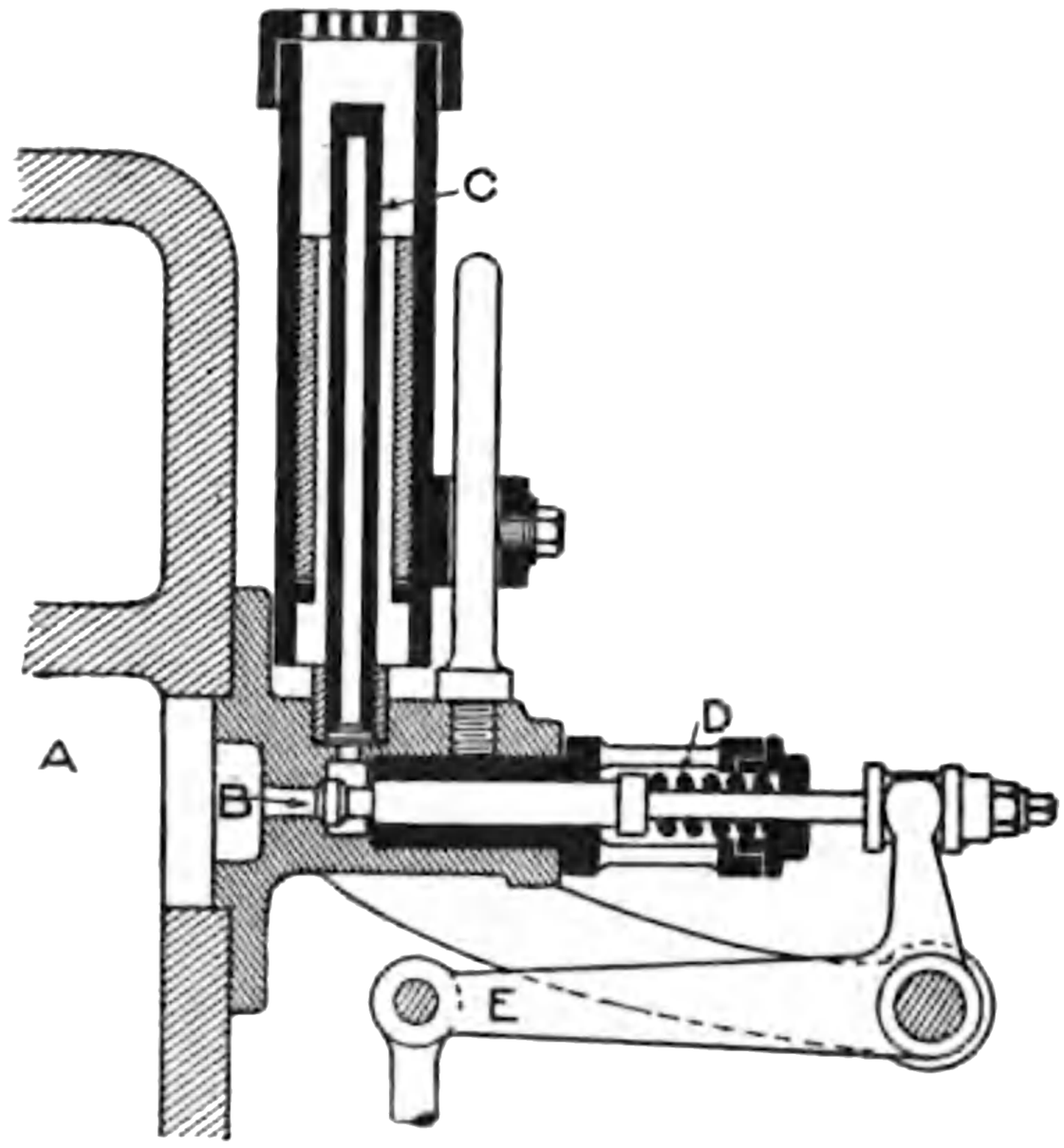

Fig. 29. Hot-Tube Igniter with Timing Valve.

Electric Ignition. Even when provided with a timing valve, the hot tube does not give very satisfactory ignition; and moreover, some time is consumed in heating the tube before the engine can be started. Accurate timing can be obtained best by electric means, and *electric ignition* is consequently used more than any other. The method is to make a spark pass, at the instant when ignition is desired, between two terminals situated in the clearance space of the engine. The most common way of forming the spark is to separate two contact-points through which a current has been flowing. An electric arc will then pass between the separating contact-points. In order to insure that the temperature of the arc is high enough and its duration sufficient to ignite the explosive mixture through which it passes, a *spark-coil* is generally inserted in the circuit. A spark-coil (Fig. 30) consists merely of a bundle of soft iron

Fig. 30. Spark-Coil.

wires, surrounded by a coil of insulated copper wire through which the current passes. The contact-points of the igniter must be brought together to re-establish the current before another spark can be obtained. A device of this nature is known as a *make-and-break igniter*; and when the contact-points do not slide across each other, it is called a *hammer-break contact.*

Make-and-Break Ignition. One of the common forms of hammer-break igniter is illustrated in Fig. 31, which shows an igniter plug removed from the cylinder-head. The movable electrode *b* is at the end of an arm fastened to the spindle *c*. When the interrupter lever *d*, which is loose on the spindle *c* and is connected to it through a coil spring, is lifted by an arm from the cam-shaft of the engine, it rotates the spindle *c* so as to bring *b* into hard contact with the stationary and thoroughly insulated electrode *a*. This completes a circuit and permits a current to flow from *a* to *b*. When ignition is desired, the lever *d* is tripped and flies back, carrying with it the spindle *c*, abruptly breaking the contact and causing an electric arc to form between *a* and *b*. The contact-points are generally made of platinum, as this does not oxidize or corrode; but other metals are also used. The passage of the spark takes minute particles of the material from one terminal, and deposits them on the other, the action following the direction of the current. By reversing the direction of the current, the material may be returned to the terminal from which it was taken, and the durability of the contact-points considerably increased.

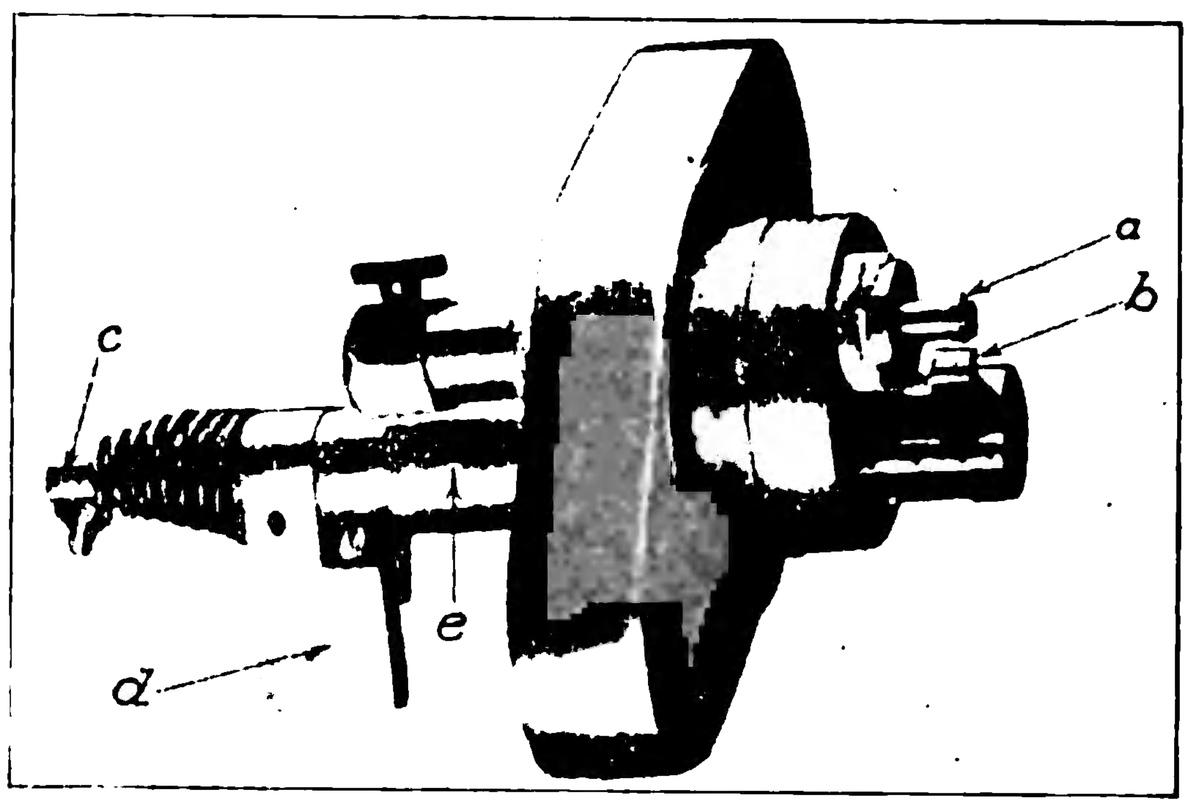

Fig. 31. Otto Engine Hammer-Break Igniter Plug.

The current is very commonly taken from a primary battery consisting of about five cells. The Edison-Lalande cell, made up of two zinc plates and a plate of compressed copper oxide immersed in a strong solution of caustic soda, is perhaps the most largely used. Dry cells and storage-battery cells are also used. Current is

Purchase full membership to immediately unlock this page

HISTORY

Tens of thousands of important historical sources, many previously unobtainable, are now available for the first time with a Forgotten Books Full Membership.

Unlimited Access
$8.99/month

Continue

*Fair usage policy applies

finally trips it. The abrupt breaking of the circuit causes a good spark to pass between the electrodes. The igniter is placed immediately over the inlet valve *E*. The thumb-screw *C* on the igniter rod permits the adjustment of the time of the ignition.

The igniter gear of an engine with hammer-break ignition is shown in Fig. 33. The igniter rod *f*, which is supported on the reel *h*, receives a reciprocating motion from a crank *g* at the end of the side shaft. During the exhaust or admission stroke, the end of the rod *f* comes in contact with the interrupter lever *d* (compare with Fig. 31) and establishes the contact of the electrodes. The vertical component of the movement of the end of the rod *f* sets free the lever *d* at the moment when ignition is desired.

Fig. 33. Hammer-Break Igniter Gear of Root and Van Dervoort Engine.

A switch (Fig. 34) should always be included in the electric circuit, and should be thrown out when the engine is not running, so as to prevent the short-circuiting and consequent exhaustion of the batteries.

When multi-cylinder engines are used, the ignition circuit is closed for a large proportion of the total running time, and consequently the batteries will run down rapidly. To eliminate the trouble and annoyance of frequent refilling of the primary cells, or of frequent recharging of the storage batteries, it has become usual in large engines, and very common in small engines, to generate the current required for ignition, by mechanical power. The simplest means of accomplishing this is by the use of a small dynamo driven by the engine; but this generates a current whose amount depends on the speed of the engine. A battery must be employed to start the engine; when the speed of the dynamo is sufficient to give the desired current, the battery is thrown out of the ignition circuit, and the dynamo is put in by means of a double-throw switch. As the ordinary ignition dynamos have self-excited field-magnets, the current generated increases in a double ratio with increase of speed; that is, not

only is the armature speed increased, but the field excitation is increased also. The result is that, as the speed increases, a dynamo is likely to give an excessively hot spark, which tends to burn away the contact-points rapidly. Consequently a dynamo is best used on a constant-speed engine. If used on a variable-speed engine, it is necessary to have a *speed-governor* which prevents the generator acquiring more than a certain desired speed; without this the current at high speed might be destructive to the generator. The electrical output of a dynamo is large compared with that of a magneto of the same size and speed.

A dynamo may be used either with make-and-break ignition or with jump-spark ignition. In the former case, it is not necessary to have a spark-coil in series, as the self-induction of the armature

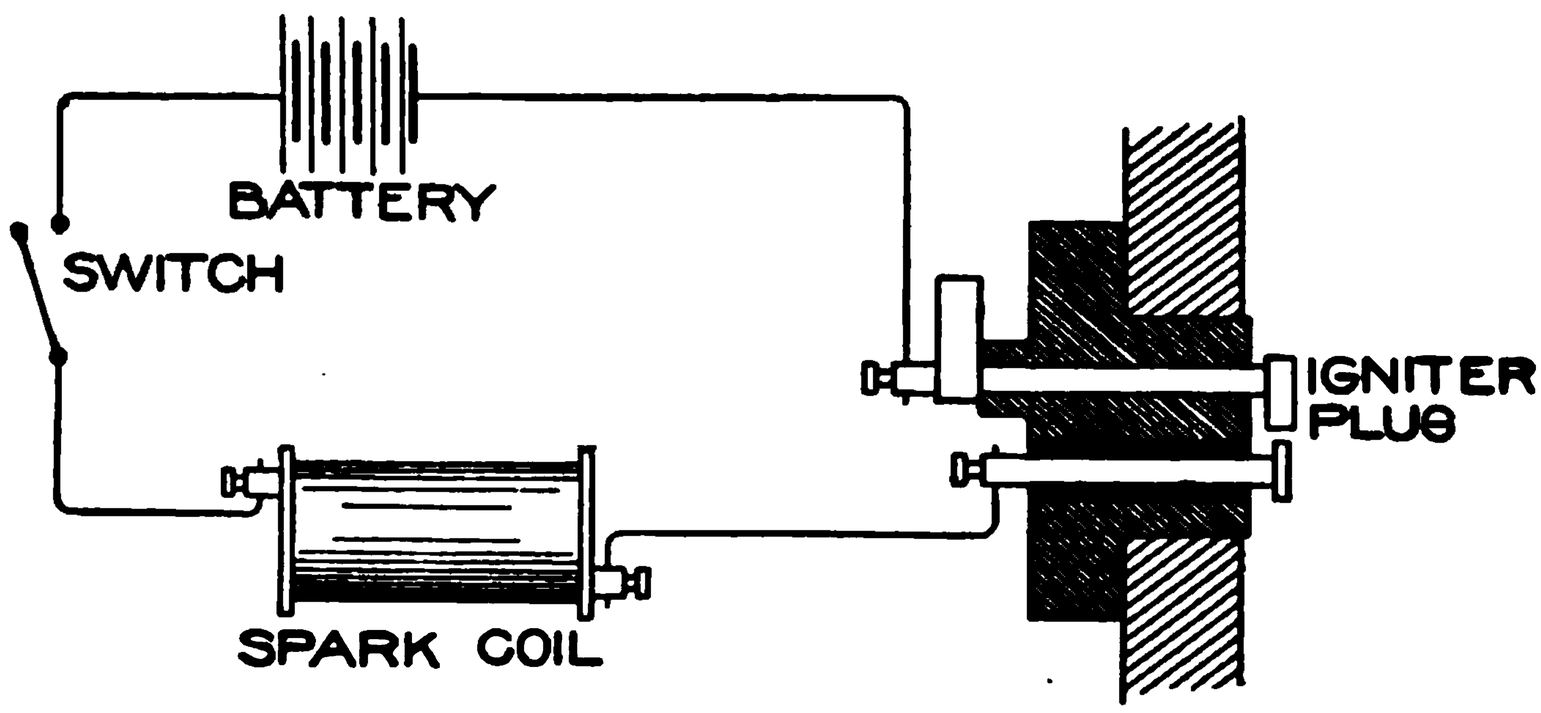

Fig. 34. Diagram of Circuit for Make-and-Break Ignition.

furnishes the necessary extra current when the circuit is broken. With jump-spark ignition, the usual induction coil is necessary.

Magnetos. With a variable-speed engine, if a mechanically generated current is to be used, it is best obtained from a *magneto*. The only fundamental difference between a magneto and a dynamo is that a magneto has permanent magnets, while a dynamo has electromagnets. The strength of the magnetic field through which the armature rotates will naturally remain constant in a magneto, while with a self-excited dynamo it increases with the speed. The variation of the current generated with the speed, will consequently be less in a magneto than in a dynamo. A magneto may be run in either direction. For ignition purposes it is not necessary that the current should have constant direction; consequently ignition magnetos are not supplied with the usual commutators and brushes, and

they deliver an alternating current. One terminal of the armature coil is grounded on the armature core; the other goes to a collector-ring on the shaft, and is taken off by a single brush.

The magneto armature may be constructed precisely like a dynamo armature with commutators and brushes, delivering continuous current. In that case it does not have to run in step with the engine, but requires a spark-coil.

More frequently the armature is of the *H* type (Fig. 35), with a single coil of comparatively coarse wire. The motion of the armature may be either a continuous rotation or an oscillation. With continuous rotation, the current induced in the armature goes from zero to a maximum twice in every revolution. For the spark, the

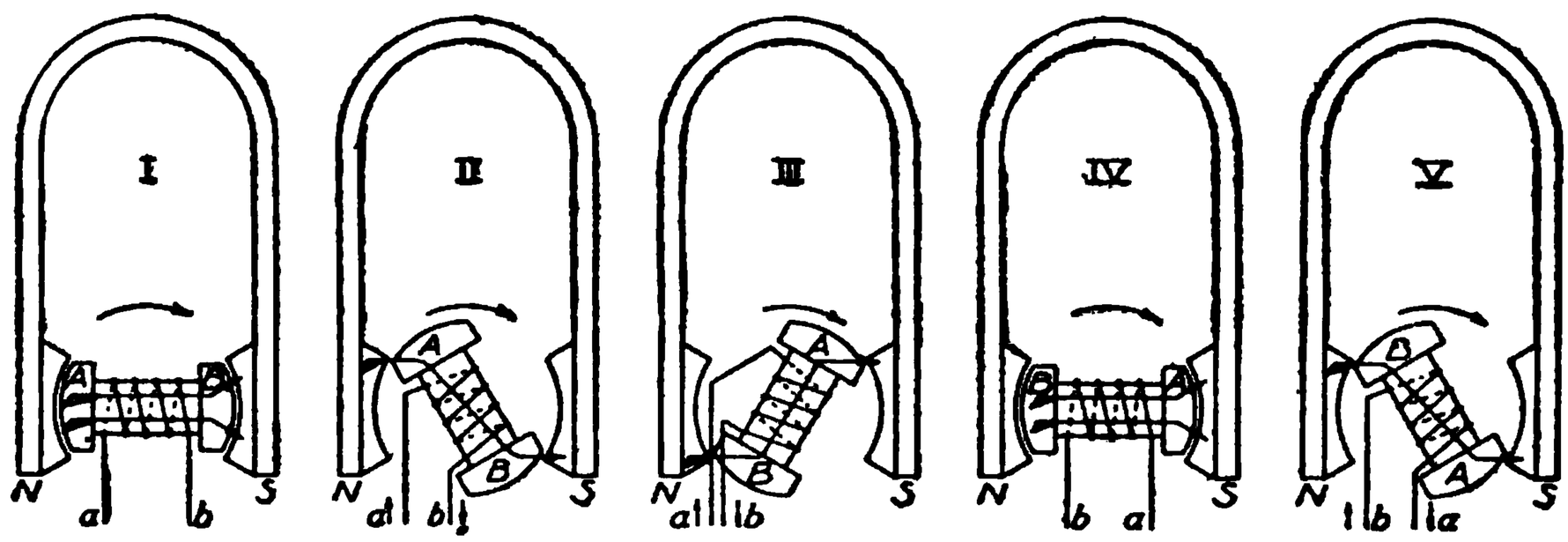

Fig. 35. Positions of Rotating Armature of Magneto.

circuit is preferably broken when the armature current has its maximum value. This is readily accomplished in magnetos which are geared directly to the engine, by making the speed of the magneto the proper multiple of the speed of the engine, the position of maximum voltage of the magneto being made to coincide with the explosion position of the engine. When the magneto and engine have the desired relative speeds and positions, they are said to be *running in step* or *in synchronism.*

Since the time of ignition of an engine should be made earlier as the speed becomes greater, it is desirable that the relative positions of magneto and engine should be capable of slight adjustment while the engine is running. This is accomplished in various ways. It is not, however, always necessary to break the circuit at the point where the current is greatest, since there is considerable current flowing (see Fig. 37) for some time after the magneto has passed its position of maximum current. Consequently, if the relative posi-

Purchase full membership to immediately unlock this page

DELVE INTO FANTASY, MAGIC, MYTHOLOGY & FOLKLORE

Forgotten Books' Full Membership gives access to 797,885 ancient and modern, fiction and non-fiction books.

Continue

*Fair usage policy applies

armature. The long arrows passing through the armature represent the lines of force passing from the N pole to the S pole. The winding *a b* of the armature is shown diagrammatically, and the direction of flow of the current induced in it is indicated by the arrows. In position I, all the magnetic lines of force pass through the armature; the flux is consequently a maximum, and the induced current zero. As the armature rotates to position II, the number of lines of force actually threading the armature decreases, and a current is induced in the direction shown. From position II, the magnetic flux continues to decrease till it becomes zero, when the armature is in the vertical position. From there on, the magnetic flux in the armature reverses itself; that is, instead of going from *A* to *B*, it goes from *B* to *A*, and increases in amount as the armature rotates through position III to position IV, where it again reaches its maximum value. The effect of the increase of the reversed flux is to give an induced E. M. F. in the same direction as that resulting from the decrease of flux in the original direction. Consequently the E. M. F. is in the same direction while the armature rotates from position I to position IV; it starts and ends at zero, and has its maximum value while the rate of change of flux is greatest—that is, between positions II and III. During the other half of the revolution, while the armature is rotating clockwise from position IV to position I, a similar action takes place; but the E. M. F, is all the time in the reversed direction, as indicated in position V. The current lags somewhat behind the E. M. F.

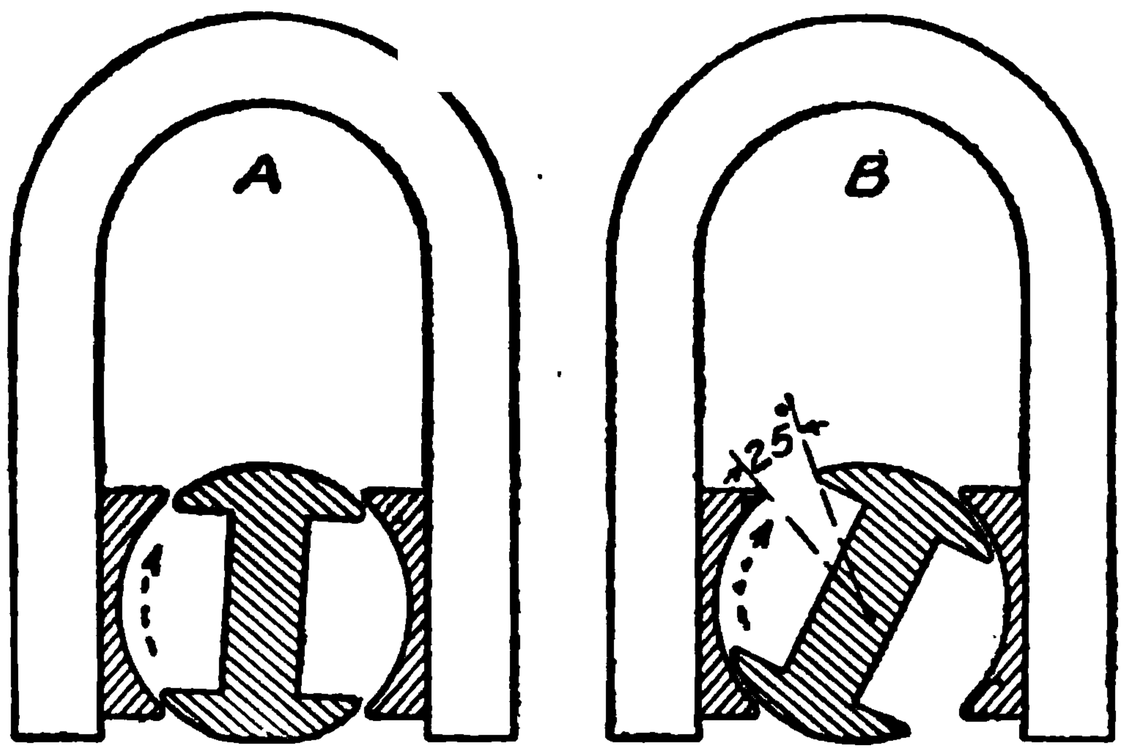

Fig. 36. Magneto Giving Induced Current during Part of Rotation of Armature.

The variations in the duration or magnitude of the induced current depend principally on the design of the pole-pieces and armature. The magneto shown in Fig. 36 gives the induced current represented in Fig. 37, while it is moving between the two positions shown—that is, while it is moving through an angle of 25°. The result of one complete revolution of the magneto is an induced current for about

25° of rotation; very little current for the next 155°; a current in the reversed direction for the next 25°; and very little current for the remaining 155°. This magneto may then be used for ignition twice in its revolution. If it is used with (1) a single-acting, four-cylinder, four-cycle engine; or (2) a double-acting, two-cylinder, four-cycle engine; or (3) a single-acting, two-cylinder, two-cycle engine; or (4) a double-acting, one-cylinder, two-cycle engine, the magneto should run at the same speed as the engine. With a single-acting, six-cylinder, four-cycle engine, it must run at one and one-half times the engine speed, in order to ignite all six cylinders.

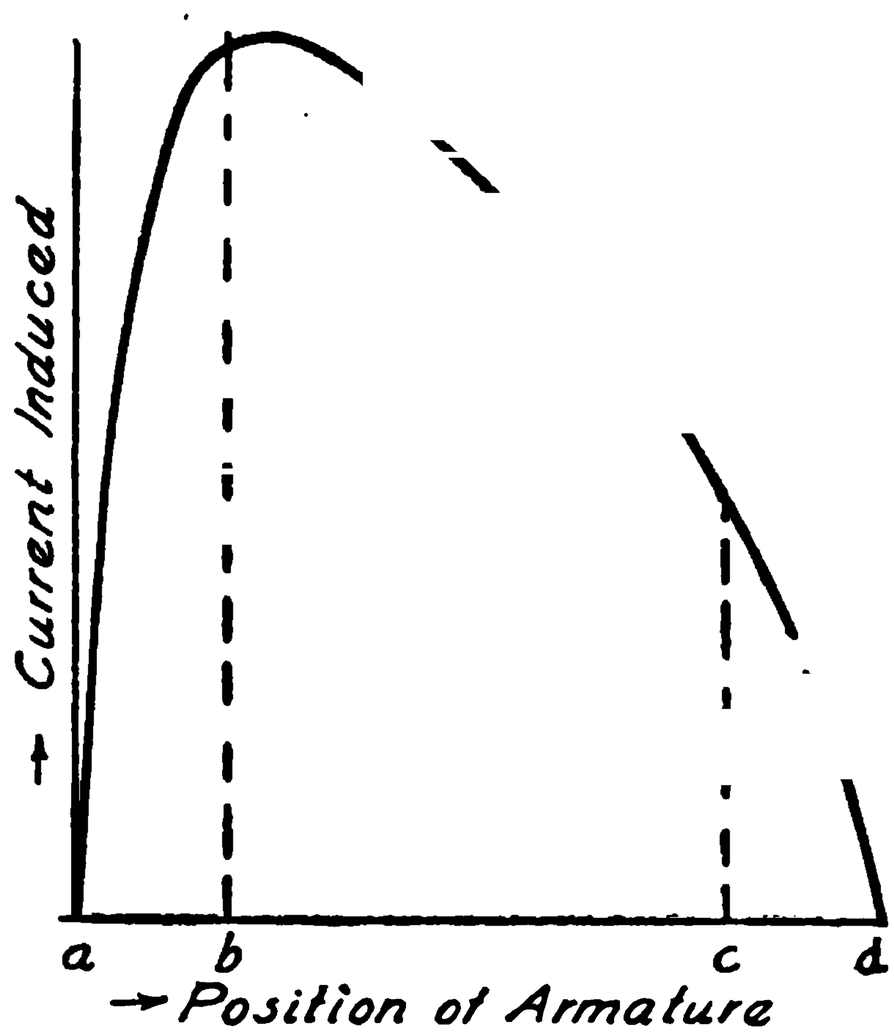

Fig. 37. Current Induced by Magneto of Fig. 36.

The ignition can occur only during the comparatively short period while current is being induced, and should occur preferably when the induced current is at or near its maximum. The form of the current curve (Fig. 37) is then of importance in determining the permissible variation in the point of ignition while the magneto and engine keep in step. A magneto with a current curve that keeps up well, may permit as much variation in the ignition as is desired. In Fig. 37, for example, the current will be ample for ignition from *b* to *c* (that is, for a rotation of the armature of about 15 degrees), so that there is the possibility of changing the ignition through a range of 15°, if the engine and magneto run at the same speed.

A variation of 15° between the earliest and latest possible ignition will be ample for some engines, but may be insufficient for others. Variation in the ignition is employed when starting up an engine; and also for variable-speed motors (such as automobile engines), when the ignition has to be made earlier as the speed increases, so as to give time enough for the combustion to be fairly complete shortly after the beginning of the stroke.

If the design of the magneto is such that the current curve has a sharp peak (that is, the duration of a current sufficient for ignition

is quite short), or if the desired variation of ignition is for any other reason greater than the duration of an adequate current in the armature coil, there must be some device for adjusting the relation of the magneto to the engine so as to make the peak of the current curve coincide with any desired point of ignition.

The simplest way of accomplishing this is to rotate the magneto shaft with reference to the engine shaft by the use of a sleeve with an external spiral groove or an internal straight feather, which is

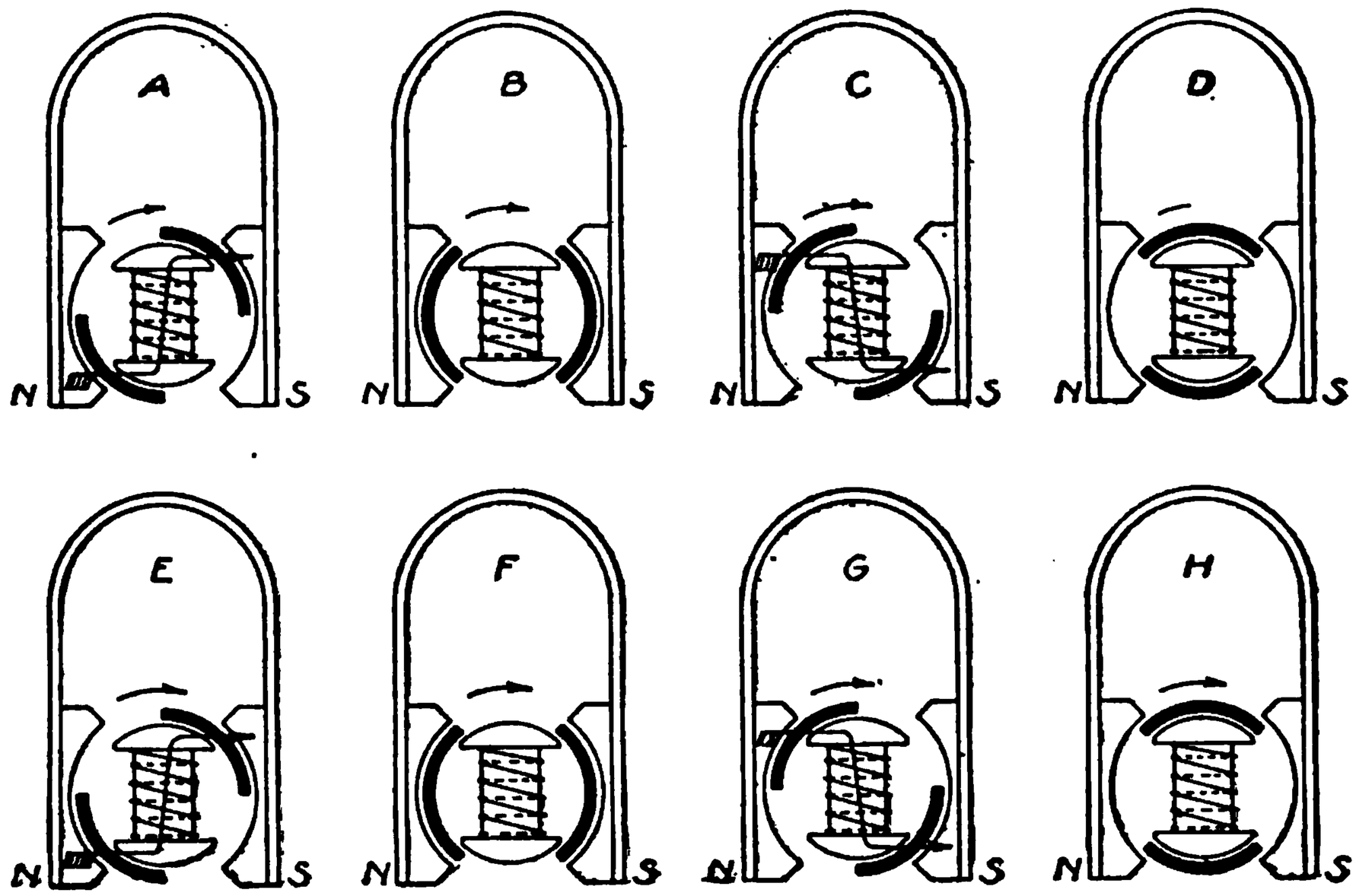

Fig. 38. Illustrating Action of an Inductor Magneto.

interposed between the armature shaft and its pinion. By a longitudinal movement of this sleeve, the armature is rotated in relation to the engine shaft.

The action of the *inductor magneto* is shown in Fig. 38. This figure shows eight positions in the rotation of the inductor, which consists of two cylindrical segments of soft iron. The magnetic condition of the armature core depends entirely upon the position of the inductor, which in turn is determined by the engine position, the inductor being geared to and running synchronously with the engine. The armature is stationary. In the positions *A*, *C*, *E*, and *G*, the segments form a magnetic bridge between the magnet poles and the heads of the armature core, and the core becomes highly magnetized. The path of the magnetic lines is shown in the diagram. In these positions,

Purchase full membership to immediately unlock this page

HISTORY

Tens of thousands of important historical sources, many previously unobtainable, are now available for the first time with a Forgotten Books Full Membership.

Unlimited Access
$8.99/month

Continue

*Fair usage policy applies

magneto. If it is to supply current for a number of igniters, a *timer* or *distributor* must be used with it; this distributor must be geared to the magneto in such way as to insure a sufficient current being generated at the moment when the circuit is established with each of the igniters. The distributor is usually a rotating metal segment connected with the insulated terminal of the armature coil, coming in successive contact with conductors leading to the insulated stationary electrodes of the igniters.

Timers. The timer shown in Fig. 41 consists of a cam (driven from the lay shaft) the high point of which comes in contact once during a

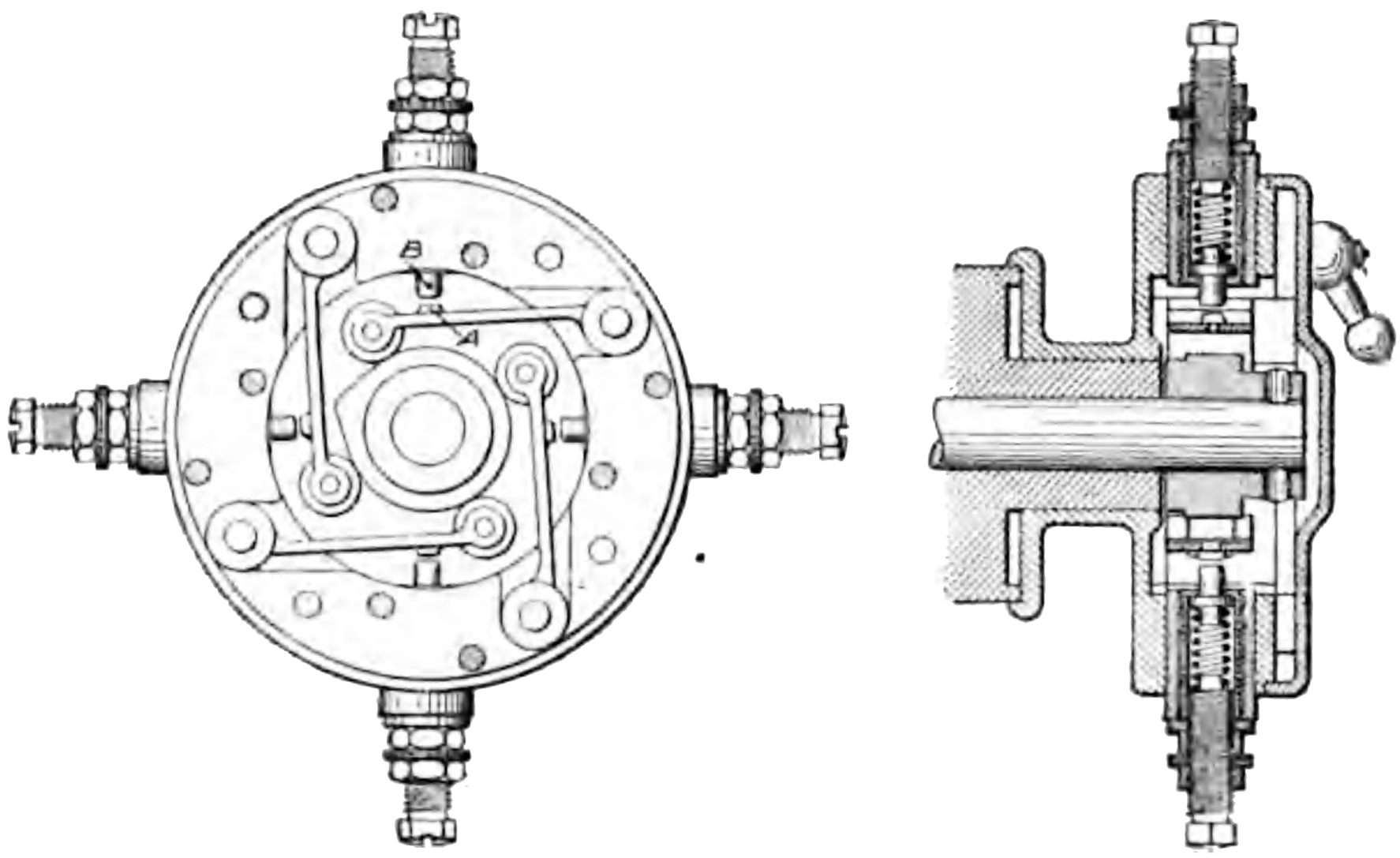

Fig. 41. Pittsfield Timer.

revolution with the rollers on each of the four pivoted arms. Each arm has a contact-point *A*, which is thereby brought into contact with the insulated and spring-supported contact-point *B* connected with each of the four terminals. The contact-points are held firmly together by the springs until the cam passes. There are coiled springs in the pivot ends of the arms, which hold the rollers in contact with the cam.

The current from a low-tension magneto is used only for make-and-break ignition. An example of its use is given in Fig. 42, which shows a mechanical make-and-break apparatus with a device for varying the time of ignition. The cam *A* on the lay shaft, working through the lever *B* and rod *D*, brings the moving electrode *E* into con-

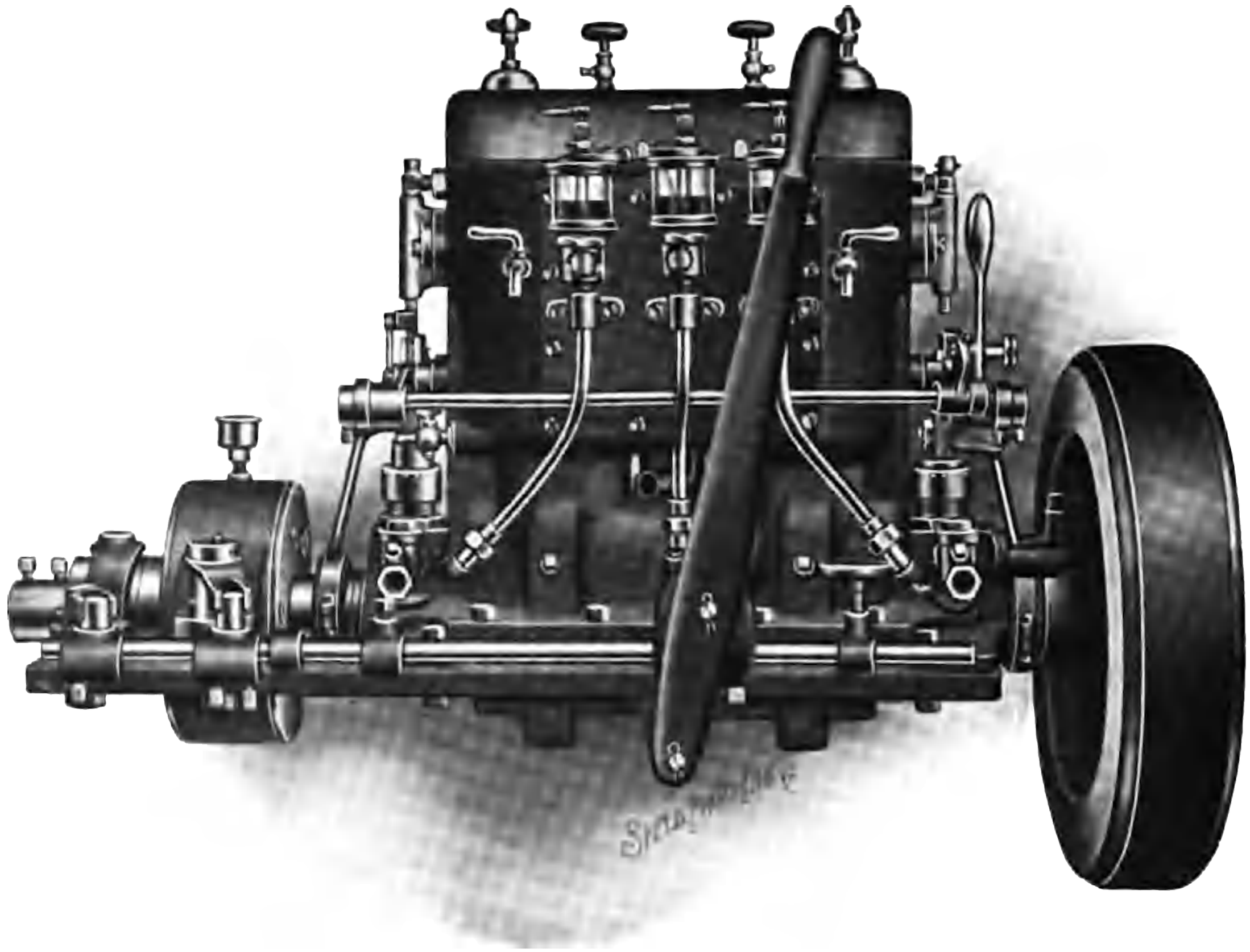

TOQUET MARINE MOTOR.
Starboard Side with Reverse Gear.

Purchase full membership to immediately unlock this page

DELVE INTO FANTASY, MAGIC, MYTHOLOGY & FOLKLORE

Forgotten Books' Full Membership gives access to 797,885 ancient and modern, fiction and non-fiction books.

Continue

*Fair usage policy applies

segments. The lower end of this lever is moved through the range shown in the figure, by a lifter *B*, which is fastened to the lay shaft *A*. The extremities of the upper arms of the lever are held by strong spiral springs which tend to keep it in the first position. On the rotation of the lay shaft past the second position, the lever is tripped, and the springs bring it smartly back; and after a few rapid oscillations, it comes to rest again in the first position. This rapid oscillation gives rise to a rapid succession of electrical impulses.

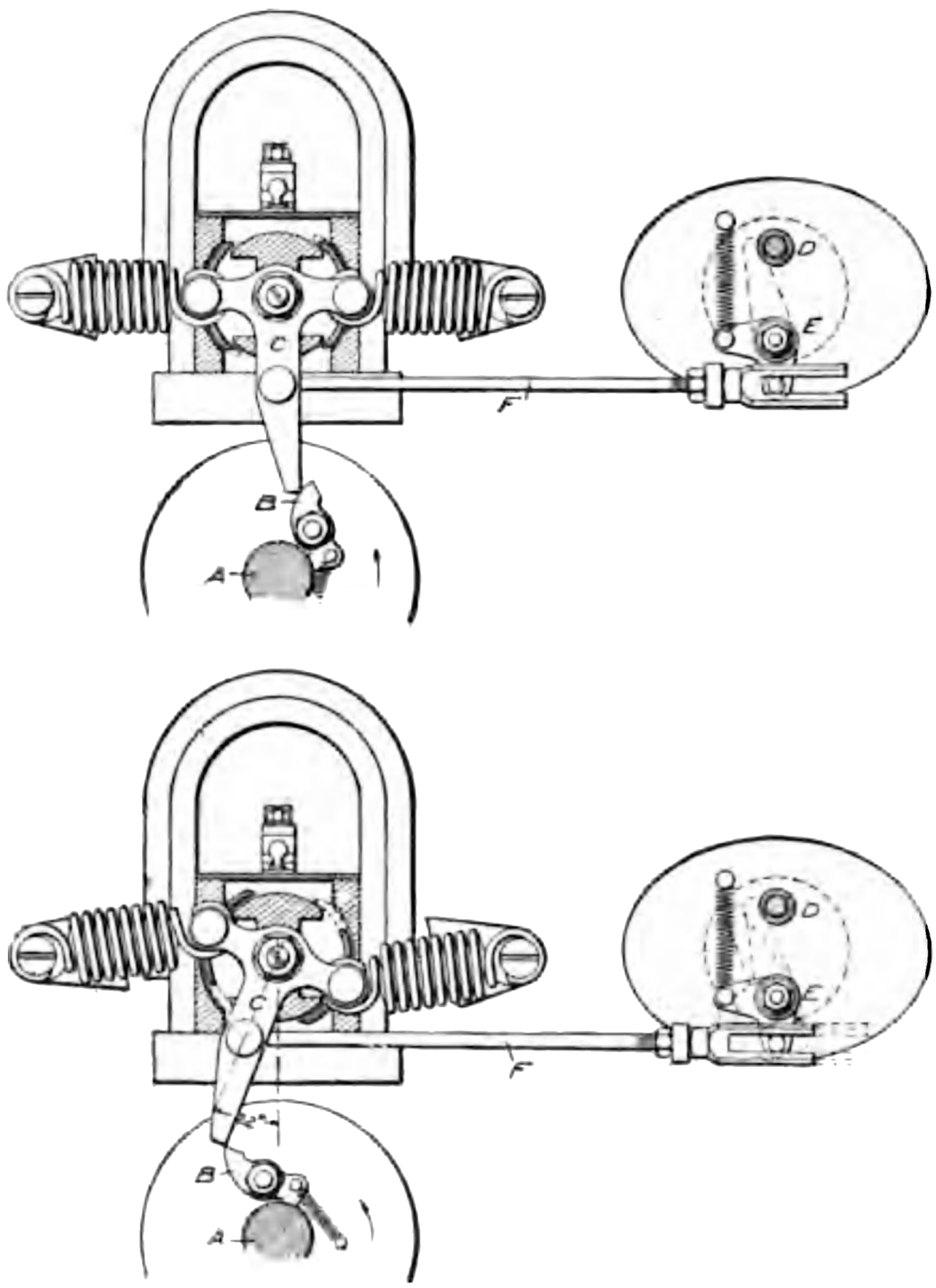

Fig. 43. Bosch-Sims Oscillating Magneto. Inductor Type.

The connection of such a magneto to the make-and-break ignition apparatus, is shown in the same figure. The fixed electrode *D* is electrically connected to the insulated terminal of the magneto; *E* is the other electrode, which is kept in contact with the fixed electrode by means of a spring and bell-crank lever until it is separated from it, on the tripping of the magneto, through the impact of the forked rod *F* on the other arm of the bell-crank lever. A series of sparks passes between the electrodes as a result of the oscillation of the magneto-inductors.

This method of ignition gives admirable results; and it is particularly applicable where one igniter only is to be used. If more than one igniter is necessary, there is required a separate magneto for each igniter. The action of this apparatus is noisy; and if

several are in use, the noise becomes quite objectionable. Also, it is not applicable with high speeds of rotation. Its great advantage is that it gives an equally good spark at all speeds, and that it does away with the necessity for supplementary sources of electricity. When there are several igniters, or when the speed is very high, the rotary forms of the magneto are more satisfactory.

Magnetic Make-and-Brake Igniters. With the make-and-break appliances hitherto described, it is necessary to have a

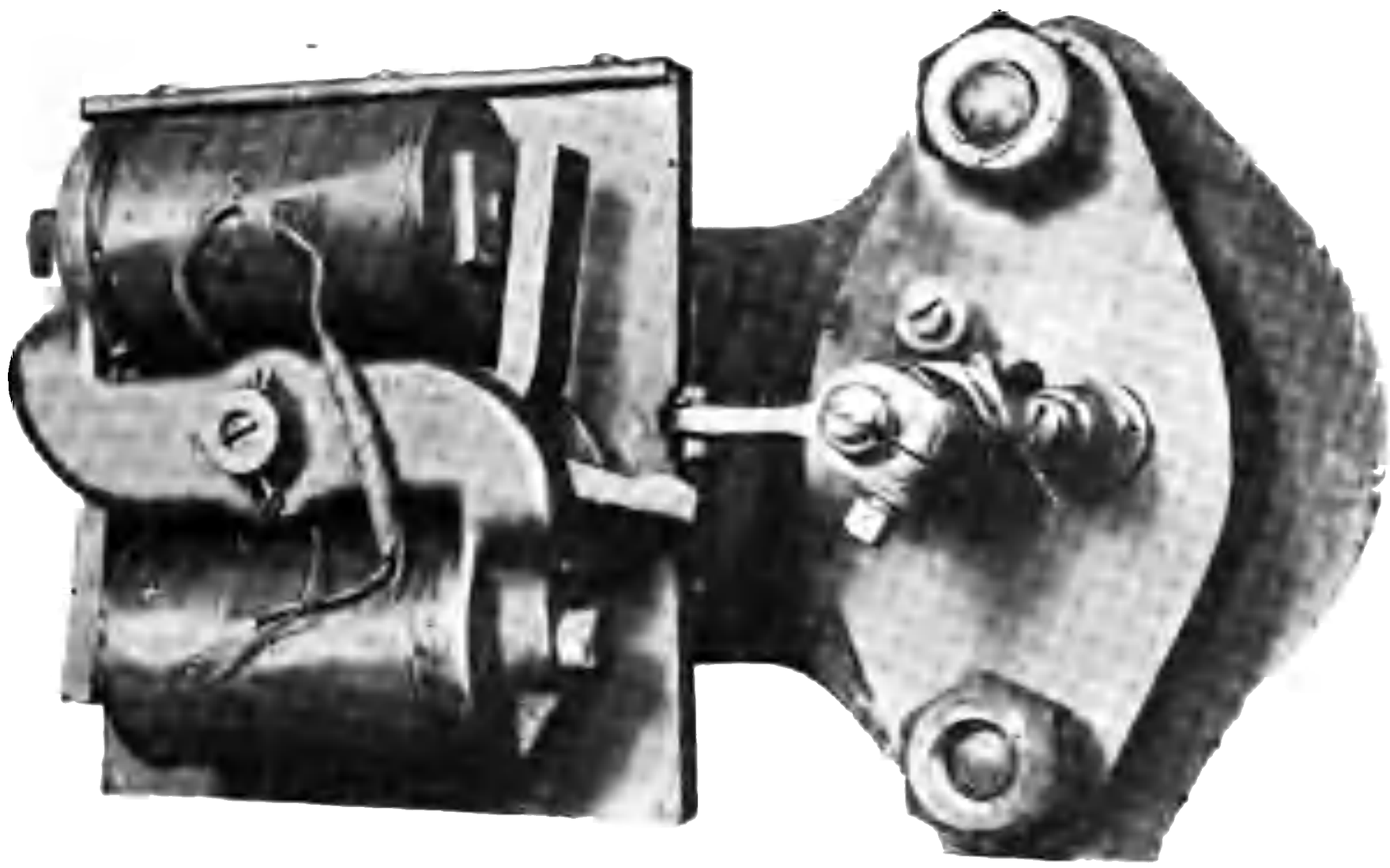

Fig. 44. Magnetic Make-and-Break Igniter.
Westinghouse Electric & Manufacturing Company, Pittsburg, Pa.

separate tripping device driven from the lay shaft for each igniter. In a large double-acting engine with two igniters at each end of the cylinder, this means that four separate tripping devices are required on the cylinder. The result is much complication and noise. It is possible practically to eliminate the complication and the noise by substituting for the mechanical make-and-break device an electrically actuated make-and-break apparatus. Such a piece of apparatus is called a *magnetic plug*; it must always be used in series with a distributor which sends current to it at the instant when a spark is desired.

In Fig. 44 are shown, to the left, the electromagnetic device—and to the right, the outside—of a make-and-break plug similar to that shown in Fig. 31. On passing current through the electromagnet, the armature, which is one arm of a bell-crank lever, is

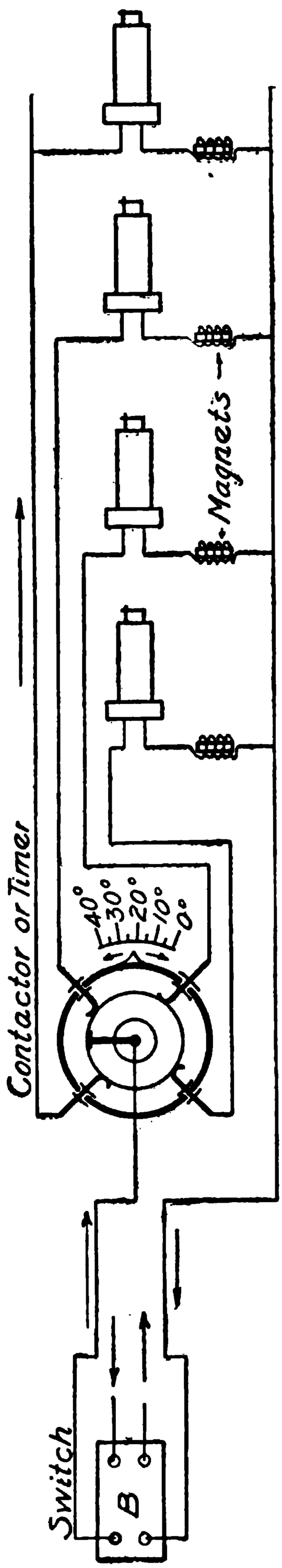

Fig. 45. Wiring Plan for Magnetic Igniters.

attracted to the magnet, and the other arm of the bell-crank lever strikes the moving electrode. The electromagnet is used in series with one of the electrodes. The circuit is re-established by the action of gravity.

A diagram of the wiring from any suitable source of electricity to four magnetic igniters, is given in Fig. 45. The simultaneous adjustment of the timing of the four igniters is effected by rotating the timer through the desired angle.

Another magnetic spark-plug is shown in Fig. 46. The electromagnet and the make-and-break device are fastened on the long nipple *A*, which screws into the cylinder and is kept gas-tight in place by the lock-nut *B* and a copper washer. The stationary electrode *L* is screwed into the end of the nipple, and the whole of the rest of the mechanism is electrically insulated from *A*. The movable electrode *L* is carried on an arm *D*, which is pivoted on the shaft *C*. *C* has a conical shoulder, which is pressed against a conical seat by the spiral spring *E*, thus preventing gas leakage along *C*. On the passage of current through the electromagnet *H*, the armature *I* is attracted; and as the arm *J* on which it is supported is clamped to *C*, the shaft *C* is rotated so as to bring the electrodes *L L* in contact. On the interruption of the current, the armature *I* is separated from the magnet *H* by a small coiled spring in the magnet core, which forces *I* against the stop *K*. The spark between the electrodes passes at the moment of the interruption of the current by the timer.

Purchase full membership to immediately unlock this page

HISTORY

Tens of thousands of important historical sources, many previously unobtainable, are now available for the first time with a Forgotten Books Full Membership.

Unlimited Access
$8.99/month

Continue

*Fair usage policy applies

able to overcome the resistance of the air-gap, and a *spark* (or *electric arc*) will spring across the gap. As the resistance of an air-gap is very high, a considerable electromotive force is always necessary, and consequently this method is spoken of as a *high-tension* method. The moment the spark passes between the electrodes, the resistance of the air-gap is reduced enormously, so that the high tension is necessary only for starting the spark, not for keeping it up. The resistance increases with the width of the air-gap. With a make-and-break contact, the current is passing before the electrodes separate; and the spark which passes from one electrode to the other encounters little resistance until they are separated a considerable distance, because the continuous spark keeps the resistance low. When, however, the spark is finally interrupted by the increase in the air-gap, it can no longer jump the gap, even when the electrodes approach very near to each other, because it is only a low-tension current that is used for make-and-break ignition.

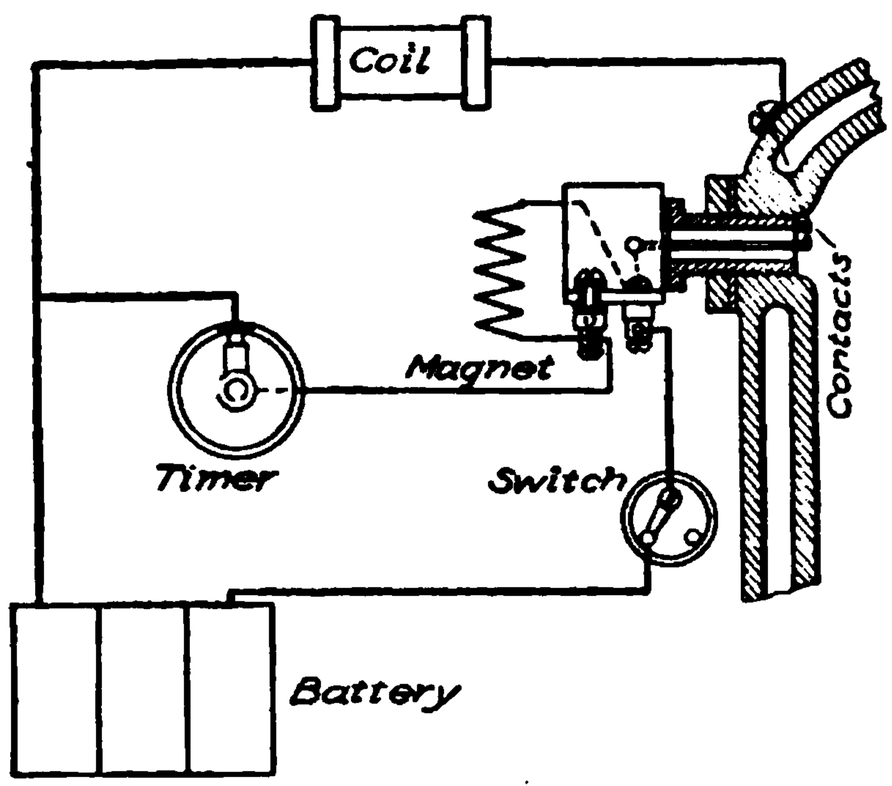

Fig. 47. Wiring Connections of Hayden Magnetic Spark-Plug.

With a constant air-gap, the resistance to the passage of the spark increases with the pressure of the air which surrounds the electrodes. In gas engines the spark is always required to pass after the charge has been compressed; and consequently a considerable voltage is necessary. The actual voltage necessary is shown graphically in Fig. 48 for the small air-gap of .02 inch; with 80 pounds compression, over 12,000 volts is necessary. For larger air-gaps, the necessary voltage is still greater. A $\frac{1}{16}$-inch gap at atmospheric pressure requires 10,000 volts. Probably about 100,000 volts is necessary on many spark-plugs.

An ordinary cell (primary or storage) will give about two volts, so that it is obviously impracticable to get the desired electrical pressure by putting sufficient cells in series. The magnetos described previously also give low voltages—say 100 to 200 volts as the maximum pressure. In order to use these sources of electrical power

for jump-spark ignition, an *induction coil* must be used to transform this low-tension current into the desired high-tension current.

Induction Coils. When a current flows through a coil of wire, magnetic lines of force are set up surrounding (interlinking) the coil. Conversely, if magnetic lines of force are made to cut a coil, an E. M. F. will be set up in the coil, whose magnitude (as already explained) depends on the rate of change of the interlinkages. If the current flowing through a coil ceases suddenly, the magnetic lines of force cease also—that is, there is a sudden change of the interlinkage; and consequently a current will be induced, just as if the magnetic lines had been due to an outside magnet which was suddenly removed. The induced current is in the same direction as the current that was interrupted. This phenomenon is called *self-induction*. The self-induction is greatly increased if there is a bundle of soft iron wires inside the coil of wire, as this causes a greater concentration of the lines of force and increases the interlinkage. The ordinary spark-coil which is used in make-and-break circuits, with battery for source of energy, is built on this principle. When magnetos are used for the generation of the electrical energy, the armature acts as a spark-coil, so that no other spark-coil is necessary. The effect of the spark-coil is to increase the electromotive force at the instant when the current is interrupted; and when this interruption is due to the actual breaking of the circuit, to cause a spark to jump across the gap formed. This is what takes place in the make-and-break circuit.

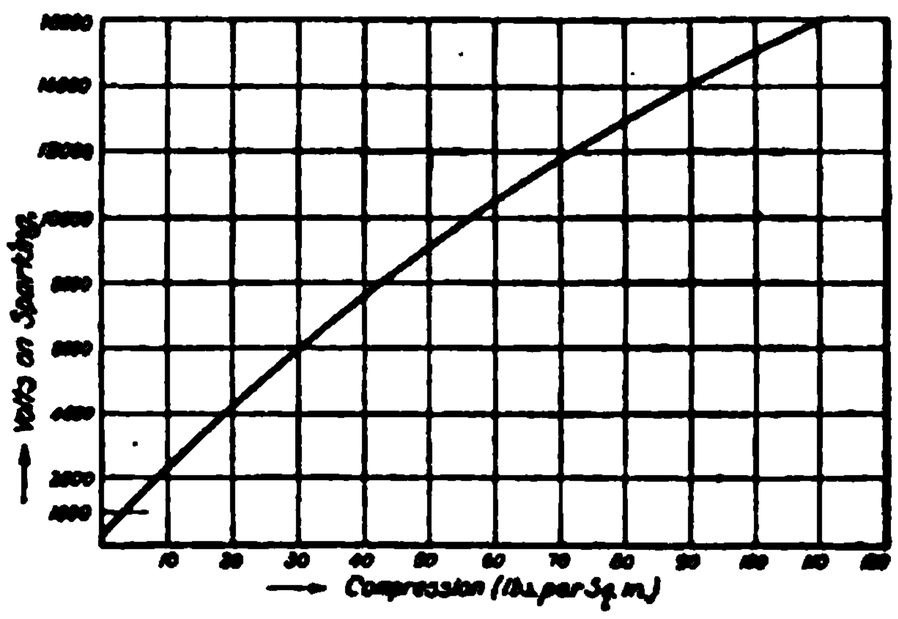

Fig. 48. Curve Showing Voltage Required for Sparking across a .02-Inch Gap with Various Compressions.

If two coils of wire are wound on the same core of iron wire, and if one of these coils, the *primary coil*, is connected to a source of current, and the other, the *secondary coil*, is closed upon itself, then the same number of lines of force will cut both coils, but the interlinkages will depend in each coil on the number of turns in the coil. If the secondary coil has one hundred times as many turns as the primary coil, the interlinkage with the secondary coil will be one

hundred times greater than with the primary coil; and consequently, on the interruption of the primary current and the disappearance of the magnetic lines, the rate of change of interlinkage will be one hundred times as great as in the primary coil. The pressure of the current induced in this way in the secondary coil, can be made as high as desired by increasing the number of turns of the coil. The action of the one coil on the other is called *mutual induction.*

The voltage in the secondary coil depends not only on the number of turns, but also on the rate at which the magnetic lines of force threading the coil are broken down. This latter depends on the rate of disappearance of the current in the primary coil. Now, it is not possible to stop the flow of current in the primary coil instantaneously, with an induction coil made up of the elements mentioned above. It will be found, on trying it, that only feeble sparks will be given by the secondary coil. The trouble arises from the self-induction of the primary coil, which, as described above, tends to keep the current flowing after the circuit has been broken, and causes a spark to jump across the broken primary circuit. The spark in the primary circuit will be found to be even larger than the spark that can be obtained in the secondary circuit; and it not only does no good, but on the contrary is most harmful, as it quickly burns away the contact-points in the primary circuit. To remedy this trouble, the self-induction of the primary coil must be overcome; and this is accomplished by means of a *condenser.*

A condenser consists of a large number of thin sheets of tinfoil separated from one another by sheets of paraffined paper or other insulating material. If the sheets of tinfoil are considered as numbered in order, all sheets of even number are connected together and to one terminal of the condenser; and all sheets of odd number are connected to the other terminal. The condenser is then connected across the break in the primary circuit. A condenser constructed in this way has capacity for holding or retaining an electrical charge. When the primary circuit is broken, the self-induced current, instead of forcing its way across the gap, finds its path of least resistance into the plates of the condenser, and goes there and is retained. If the capacity of the condenser is sufficient, the current in the primary will die down instantly, and consequently a high pressure will be induced in the secondary coil.

Purchase full membership to immediately unlock this page

DELVE INTO FANTASY, MAGIC, MYTHOLOGY & FOLKLORE

Forgotten Books' Full Membership gives access to 797,885 ancient and modern, fiction and non-fiction books.

Continue

*Fair usage policy applies

A clockwise rotation of the plate makes the ignition earlier. The mechanical trembler has been generally discarded because of the breaking of the spring blades, the burning-out of the contact-points, and other troubles.

It is now the general practice to have a magnetic buzzer or vibrator as part of the induction coil. An ordinary induction coil is shown in Fig. 50. The primary winding leads from the terminal *P*, around the soft iron core *A*, to the metal plug *B*. The secondary winding leads to the two terminals S_1, S_2. A flat steel spring *C* is

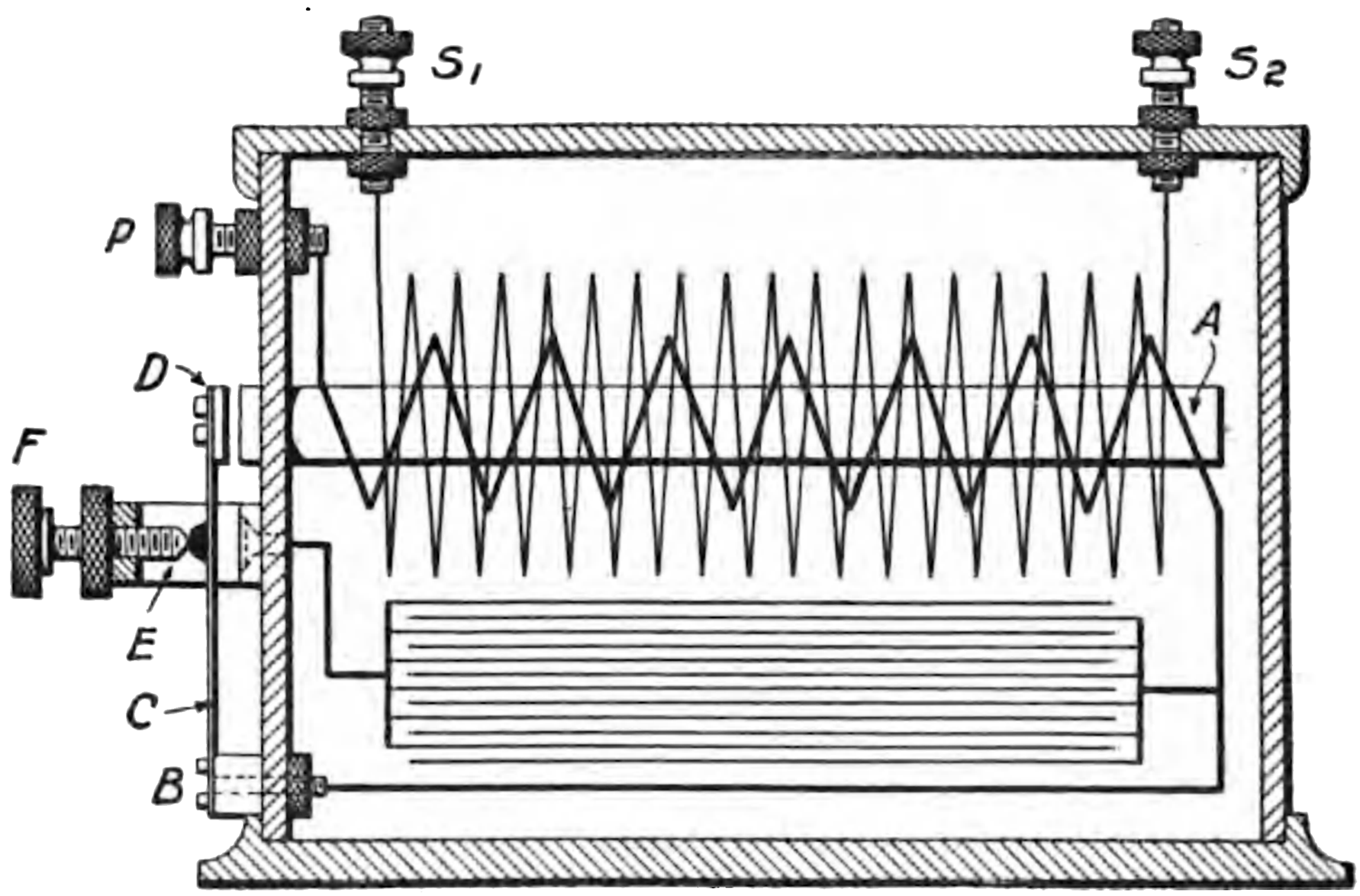

Fig. 50. Induction Coil and Trembler.

fastened to the block *B*, and has riveted at its free end the soft iron armature *D*. In the normal position of the spring *C*, the armature *D* is separated a short distance from the armature core *A*, and the platinum-tipped contact-point on the back of the spring touches the similar contact-point at the end of the adjusting screw *F*. *F* is connected through the battery and timer, with the terminal *P*.

When current is sent through the primary circuit, the core *A* is magnetized, attracts the armature *D*, and breaks the contact at *E*. This interrupts the current in the primary circuit, and with the aid of the condenser induces a powerful current in the secondary. As soon as the current in the primary winding ceases, the core loses its magnetism, and the armature *D* returns to its normal position, re-

establishing the current in the primary. The cycle of operations then recommences and continues so long as current is supplied to the primary coil. The time required for one make and break (that is, for one complete vibration of the spring) is generally less than $\frac{1}{100}$ second. The rapidity can be varied by adjusting the contact-screw *F* (which is held in place by the lock-nut shown), the frequency increasing as the screw is advanced.

It is not desirable to have a very light contact between *F* and the spring, because in that case a very small force suffices to break the contact, and consequently the primary circuit will be broken before the current has reached its maximum value. This results in a weak magnetic field, and consequently in small inductive effect and weak spark in the secondary.

Induction coils are applied to engines which frequently have very high speed of rotation—1,000 revolutions per minute, or more. With a trembler making 100 vibrations per second, and an engine making 1,000 revolutions per minute, the crank will have turned through an angle of 60° between successive sparks. It is obvious that the interval of time between successive sparks is altogether too great in this case, since, if the first spark does not effect the ignition, the second spark will come far too late to give efficient results. It is desirable, then, for high-speed engines, to make the vibration more rapid. The natural period of vibration of the ordinary hammer vibrator depends on the dimensions of the spring and the mass of the armature. The spring, however, cannot be shortened below certain limits, as that increases its stiffness too much, intensifies the magnetic force required to move it, and therefore demands a larger armature.

For best effect (that is, to get a greater induced current), the break in the primary circuit should be made more suddenly than is accomplished by the ordinary vibrator. With the ordinary vibrator, the circuit is broken as soon as the spring begins to move—that is, while the velocity of the spring is still low. To accomplish a more sudden break of contact, the moving part of the vibrator may be made in two parts, as in Fig. 51. The hammer or armature, which is magnetically attracted to the core, does not carry any contact-point, but carries instead a button, which, after a certain movement of the hammer, strikes the contact-spring, and breaks the primary current

flowing through the contact-spring to the contact-screw. When the contact is broken, the hammer is in the middle of its stroke, and is moving with considerable velocity. The result is a rapid break. The substitution of the thin hammer for the heavier iron armature (Fig. 50) permits higher speed, as the inertia effects are less.

The vibrations per second of the trembler vary in the principal coils from about 100 to 400. They are generally designed for from 4 to 6 dry-cell batteries, or a 3- or 4-cell storage battery. A good coil requires about .2 to .25 ampere when in use on a single-cylinder engine. With low compression in the engine, and the resulting comparatively low voltage required in the secondary coil, the pressure of the contact on the trembler spring can be made very slight, as it is not necessary to develop the full current in the primary coil. With high-compression engines, the pressure of the contacts must be increased, and the use of current will increase correspondingly.

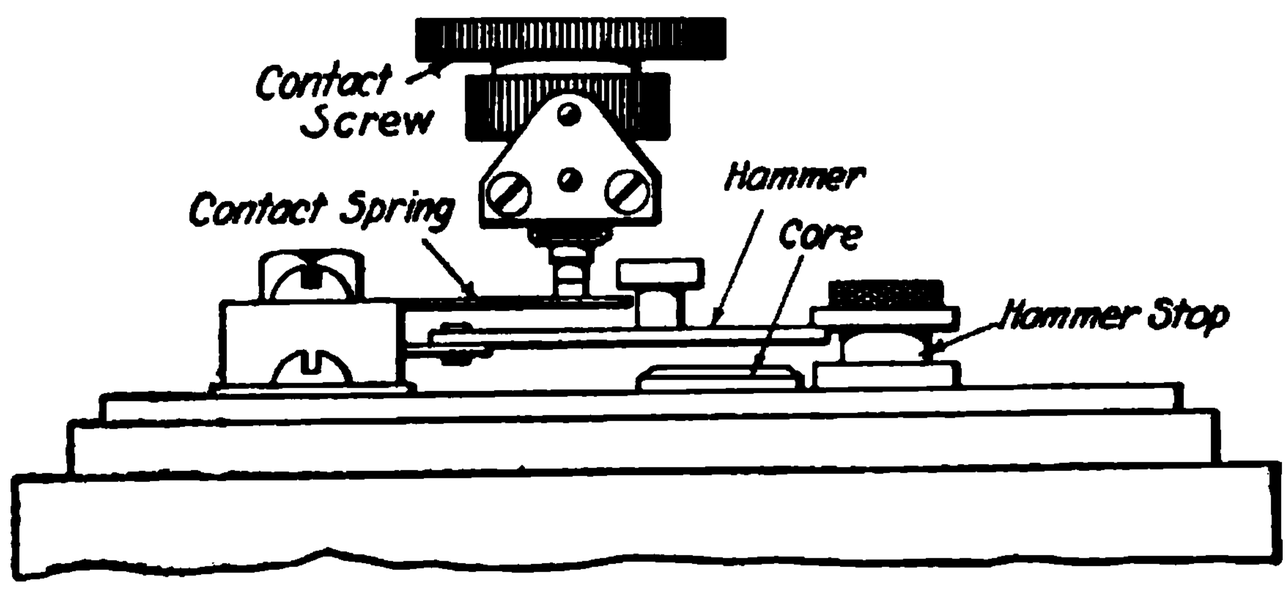

Fig. 51. Vibrator of Splitdorf Coil.
The Splitdorf Laboratory, New York City.

There is provided in all coils a safety spark-gap to prevent overstraining of the insulation in case a current of abnormally high voltage is sent through the coil. The current will pass through this gap if the spark-plug is taken off, in which case there is no small air-gap in the circuit.

Timers. If there are several igniters on an engine, they may be served either by a separate induction coil for each igniter, or by a common induction coil for all igniters. With a separate induction coil for each igniter, and one source of electrical energy, a *timer* or *primary commutator* must be used, rotating in synchronism with the engine and sending the primary current to the different coils in succession at the desired times. One form of such timer has been shown already in Fig. 41. Other forms are shown in Figs. 52 and 53. With the *snap-off timer* (Fig. 52), the pressure of the spring insures a good

Purchase full membership to immediately unlock this page

HISTORY

Tens of thousands of important historical sources, many previously unobtainable, are now available for the first time with a Forgotten Books Full Membership.

Unlimited Access
$8.99/month

Continue

*Fair usage policy applies

tributor is generally mounted on the same shaft as the timer, or is geared directly to it.

On account of the high tension in the secondary circuit, it is not necessary that the revolving arm of the distributor should actually touch the insulated fixed contacts; if current is being generated while the revolving arm is close to one of the contacts (say $\frac{1}{50}$ inch away), a spark will jump across the gap. By the use of a glass top to the distributor, the action of the coil can be observed.

Fig. 53. Connecticut Roller-Contact Timer for Four Cylinders, Cover Removed.

A combined timer and distributor is shown in Fig. 54, the timer being above, the distributor below. The primary current enters through the steel ball *a*, which comes in contact with cams *c* on the rotating sleeve *b*. The secondary current enters at *d*, and goes through the steel ball *e* to the brass strip *f*, and thence to the base of one of the binding-posts *hh*. Insulation is effected by having the post *i* and the casing *j* of hard rubber. Advance or retardation of the spark is effected by the rotation of the case *j* through the arm *k*.

High-Tension Magnetos. If a magneto is used to supply current for jump-spark ignition, it is called a *high-tension magneto.* It may be precisely the same as the low-tension magneto described previously, generating a low-tension current which goes to a separate induction coil; or it may have the secondary coil wound on the armature of the magneto, so that the magneto acts not only as current generator but as induction coil also. The latter is the common method. Since one magneto is all that is necessary for several cylinders, it is usual to make the distributor an integral part of a

high-tension magneto. A timer, interrupter, or circuit-breaker is necessary to break the primary circuit rapidly at the desired time, so as to give a good induction effect.

The general arrangement of a high-tension magneto ignition system for a four-cylinder engine, is shown in Fig. 55. The primary and secondary windings of the magneto are continuous with each other. One end of the primary winding goes to the armature core; the other end goes to a contact-breaker which normally short-circuits the primary coil, but which at the moment of sparking (when the movement of the armature is such as to give a vigorous current) breaks the circuit suddenly, and consequently induces the necessary current in the secondary. The armature is of the usual rotating type, running at the same speed as the engine and giving two electrical impulses per revolution. The contact-breaker is consequently arranged to break contact twice per revolution, giving two electrical impulses in the secondary circuit per revolution of the engine. A condenser is connected across the circuit-breaker gap in the primary circuit. The secondary winding is grounded at one end by being made continuous with the primary, and at its other end goes to an insulated ring at the left, and then through a brush to the distributor. The safety spark-gap minimizes the probability of injury to the insulation of the secondary coil from excessive voltages. The distributor arm is geared to the contact-breaker, and revolves at one-half its speed; that is, it makes one revolution for two revolutions of the engine. The rotating arm makes successive contacts with each of

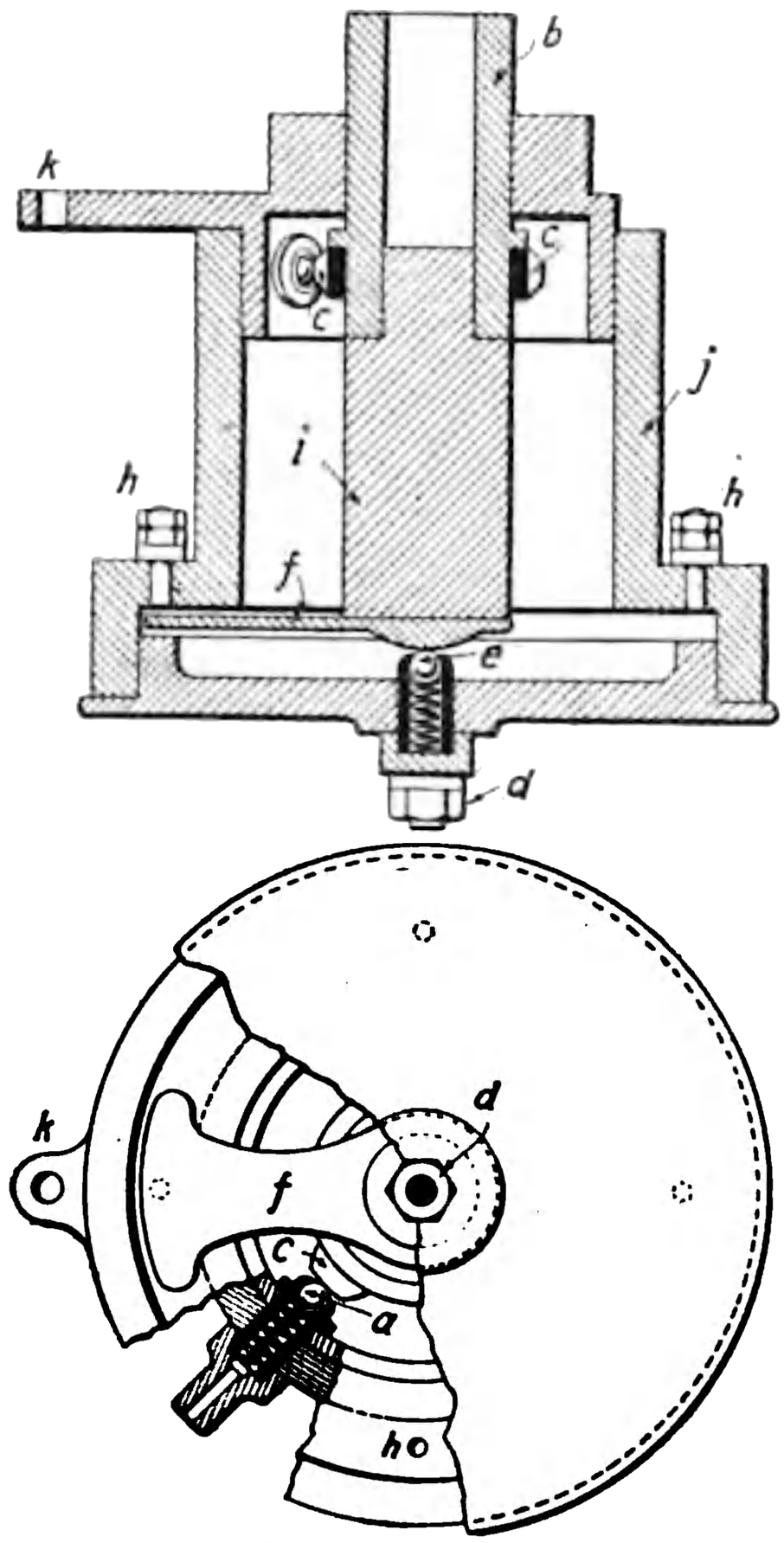

Fig. 54. Timer and Distributor.

the four insulated segments during a revolution, and consequently sends current to the spark-plugs.

Variation in the time of ignition is effected by varying the time of interruption of the primary circuit.

The constructive details of this magneto are shown in Fig. 56. The end of the primary winding is connected to the brass plate 1. In the center of this plate is screwed the fastening screw 2, which serves, in the first place, for holding the contact-breaker in its position, and, in the second, for conducting the primary current to the platinum

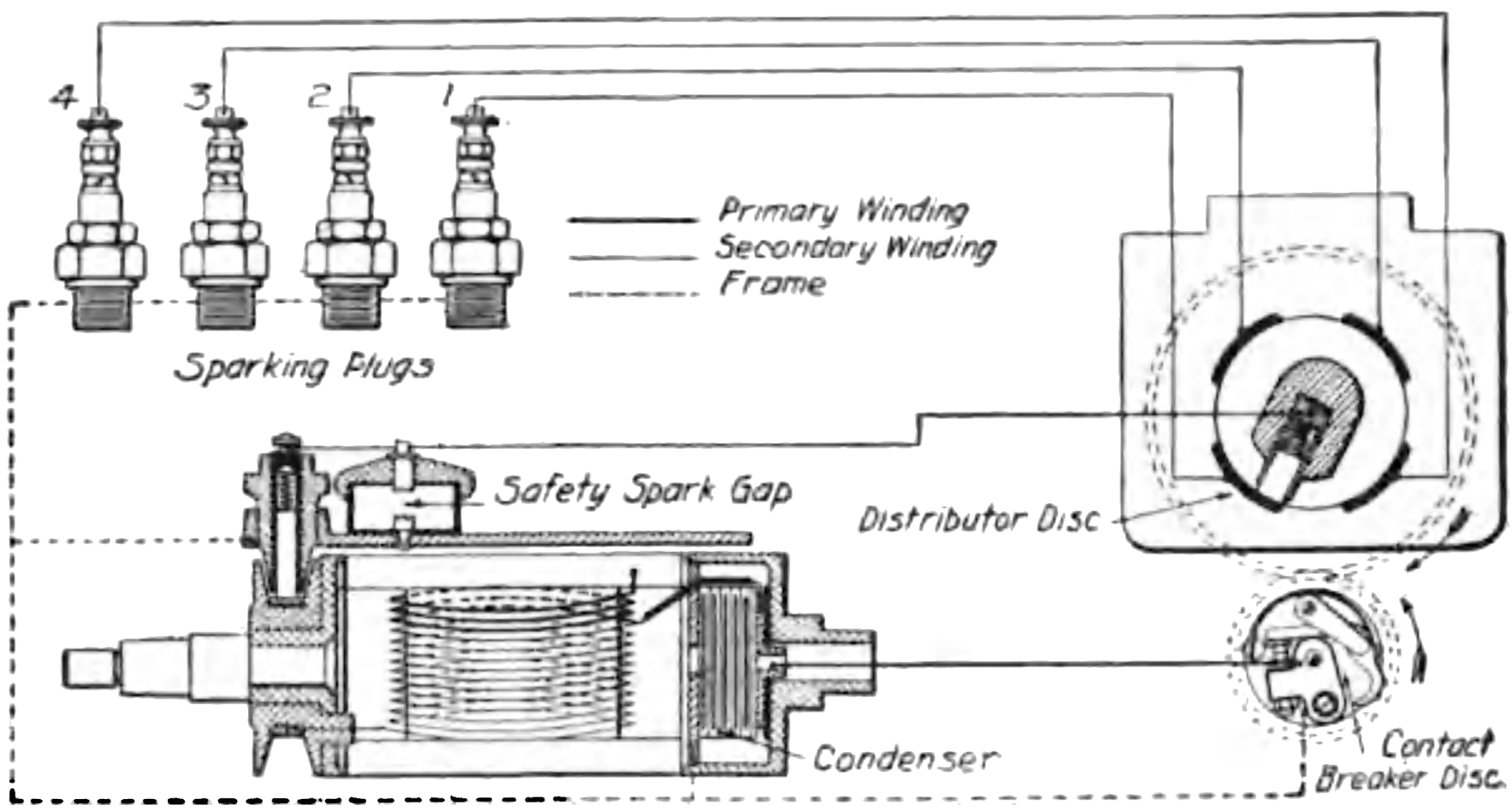

Fig. 55. Diagram of Wiring of Bosch High-Tension Magneto.

screw-block 3 of the contact-breaker. Screw 2 and screw-block 3 are insulated from the contact-breaker disc 4, which has metallic connection with the armature core. The platinum screw 5 goes through the screw-block 3. Pressed against this platinum screw by means of a spring 6, is the contact-breaker lever 7, which is connected to the armature core, and therefore with the beginning of the primary winding. The primary winding is therefore short-circuited as long as lever 7 is in contact with platinum screw 5. The circuit is interrupted when the lever is rocked. A condenser 8 is connected in parallel with the gap thus formed.

The end of the secondary winding leads to the slip ring 9, on which slides a carbon brush 10, which is insulated from the magneto frame by means of the carbon holder 11. From the brush 10, the secondary current is conducted to the connecting bridge 12, fitted with a contact carbon brush 13, and through the rotating distributor

Purchase full membership to immediately unlock this page

DELVE INTO FANTASY, MAGIC, MYTHOLOGY & FOLKLORE

Forgotten Books' Full Membership gives access to 797,885 ancient and modern, fiction and non-fiction books.

Continue

*Fair usage policy applies

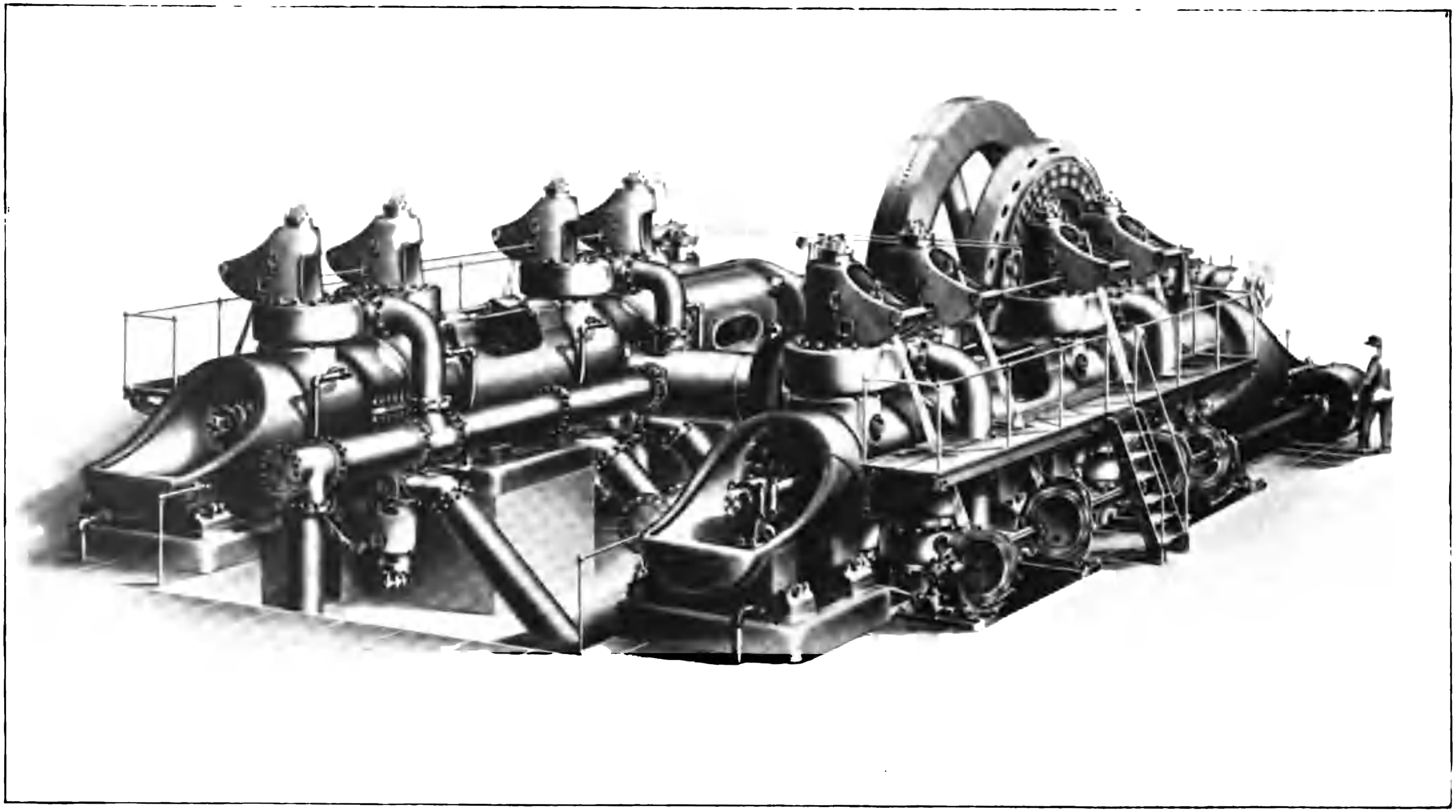

WESTINGHOUSE HORIZONTAL DOUBLE-ACTING GAS-DRIVEN GENERATING UNIT. TWIN TANDEM TYPE GAS ENGINE AND DIRECT-CONNECTED GENERATOR

800 H. P. Unit, Power Plant of Carnegie Steel Co., Bessemer, Pa.

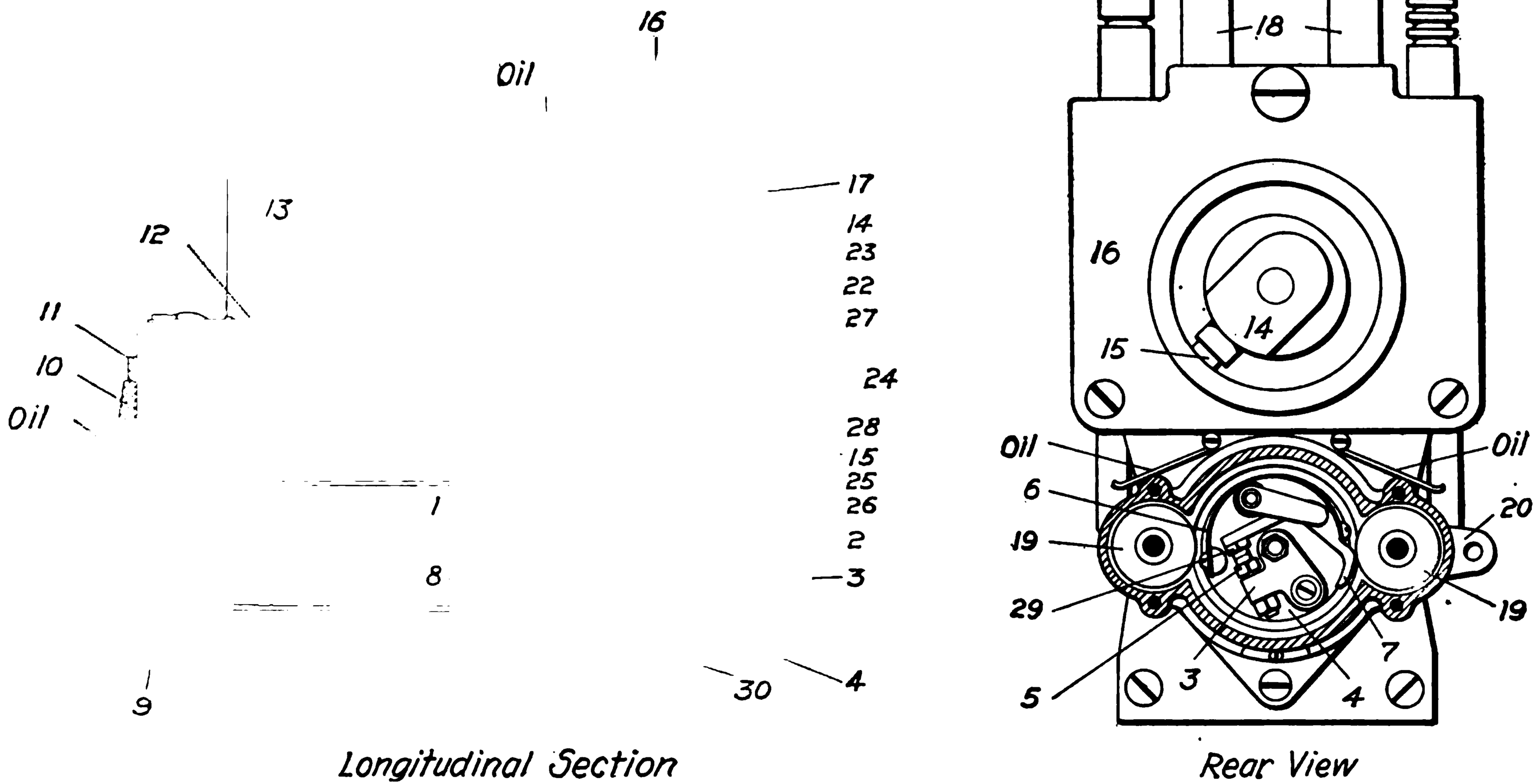

Fig. 56. Bosch High-Tension Magneto.

1—Brass Plate; 2—Contact-Breaker Screw; 3—Platinum Screw Block; 4—Contact-Breaker Disc; 5—Long Platinum Screw; 6—Contact-Breaker Spring; 7—Contact-Breaker Lever; 8—Condenser; 9—Slip Ring; 10—Carbon Brush; 11—Carbon Holder; 12—Connecting Bridge; 13—Contact Carbon; 14—Rotating Distributor Piece; 15—Distributor Carbon; 16—Distributor Disc; 17—Metallic Segments; 18—Contact Plug; 19—Fiber Roller; 20—Timing Lever; 21—Dust Cover; 22—Cover; 23—Triangular Clamp; 24—Nut for Switch Wire; 25—Spring for Fastening Brass Cap; 26—Brass Cap; 27—Brass Block for Fastening Spring of Brass Cap; 28—Fixing Bolt; 29—Short Platinum Screw; 30—Stop Screw for Timing Lever.

piece 14, which carries a radial-contact carbon 15, to the distributor disc 16.

In the distributor disc 16, are embedded metal segments 17. During the rotation of the contact carbon 15, the latter makes contact with the respective segments, and always connects the secondary current with one of the contacts.

The contact-breaker is fitted into the rear end of the armature spindle, which is bored out and provided with a keyway. The contact-breaker is held in position by screw 2. The short-circuiting and interrupting of the primary circuit is effected by means of the contact-breaker lever 7, on the one hand, and the fiber rollers 19 on the other. As long as the lever 7 is pressed against the contact-screw 5, the primary circuit is short-circuited, and the rocking of the levers by the fiber rollers 19 effects the break of the primary circuit; at the same moment ignition takes place. The distance between the platinum points, when the lever is lifted on the fiber rollers, must not exceed .5 millimeter (approximately $\frac{1}{50}$ inch). This distance may be adjusted by means of the screw 5.

Spark-Plugs. The part of a jump-spark system that is most likely to give trouble is the spark-plug itself. The spark-plug contains two electrodes, with an air-gap which is usually between $\frac{1}{32}$ and $\frac{1}{64}$ inch. One of these electrodes is grounded, the other is insulated as perfectly as possible. The difficulty is in keeping the insulation good under the very high voltages of the secondary circuit. Not only must the insulation be electrically good, but it must also be gas-tight under the high pressures existing in gas-engine cylinders.

Some common forms of spark-plug are shown in Fig. 57. They all consist of three fundamental parts—the *plug body*, which screws into the engine cylinder and is thereby grounded; the *insulated electrode*, and the *insulating body*. The insulation is effected by the use of either porcelain or mica. The former is the more brittle and as it is subjected to a high temperature inside the cylinder, and a low temperature outside, unequal expansion results, which is liable to crack it; moreover, it is not well adapted to withstand rough usage.

Mica insulation is built up of washers of sheet mica, generally without any cement between the washers. It is free from the general objections to porcelain, and is being largely used. With either form

Purchase full membership to immediately unlock this page

HISTORY

Tens of thousands of important historical sources, many previously unobtainable, are now available for the first time with a Forgotten Books Full Membership.

Unlimited Access
$8.99/month

Continue

*Fair usage policy applies

flowing in the various methods of ignition, is given by the curves in Fig. 58. With make-and-break ignition (*a*), the current increases from the time the contact-points are brought together till the circuit is opened; then the arc is drawn, and lasts while the coil which is still receiving current from the source of electricity discharges its magnetic energy; this time may be about five-thousandths of a second. With high-tension ignition without a vibrator (*b*), the only difference of the primary current curve from (*a*) is that by the action of the condenser the primary break is instantaneous. The resulting secondary induced current is of smaller amount, rises instantaneously to its maximum value, and lasts about one-thousandth of a second. With a vibrating coil (*c*) having the same duration of closing of the primary circuit by the timer as in the previous case, there is seen to be less energy for each spark in the secondary, as the current does not build up as high in the primary during the shorter contacts.

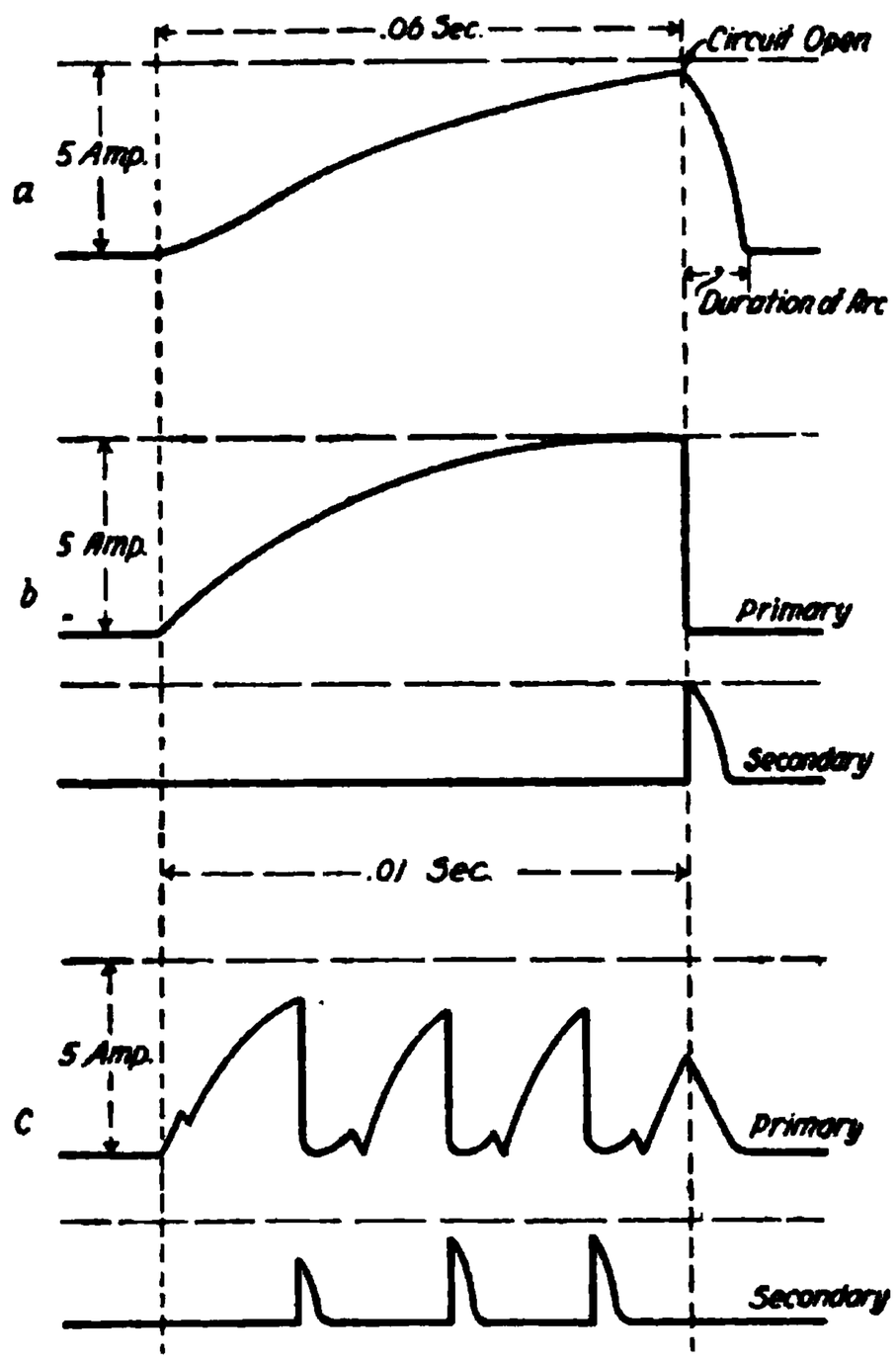

Fig. 58. Curves Showing Comparative Magnitude and Duration of Current Flowing, with Various Systems of Ignition.

The make-and-break system of ignition gives a hotter spark and one of longer duration than is obtainable with jump-spark ignition, and consequently gives more effective ignition; it is used almost exclusively in large engines. Electrically this system is most simple, but mechanically is complicated. The jump-spark, on the other hand, is mechanically simple, while the electrical system is complex. The mechanical simplicity of the jump-spark system has led to its practically exclusive use in automobile and motor-boat engines; moreover, it is better adapted to high speeds of rotation.

GOVERNING

The governing of an engine means the control of the power which it is developing, so that its speed is maintained practically constant. If the engine develops more power than is required, the engine will speed up; if the power delivered to the crank-shaft is less than the resistance there, the engine will slow down. The governing of a gas engine, like that of the steam engine, is effected by utilizing small variations of engine speed resulting from change of engine load. The controlling mechanism, or the governor proper, does not differ from that used on the steam engine; but there is a considerable difference in the way in which it controls the work done by the engine. There are two general methods in use in gas engines for varying the power—one by varying the number of explosions or impulses per minute, which is known as the *hit-and-miss* system; and the other by varying the magnitude of the impulse while keeping the number per minute constant, which may be called the *variable-impulse* system.

Hit-and-Miss System. The omission of the explosion or impulse can be obtained in several ways. The most common method is to keep the gas-admission valve closed so that air alone is taken in during the admission stroke, and consequently there is no explosion. A method of accomplishing this is to be seen in Fig. 59, in which a loaded centrifugal governor is shown driven by bevel gearing from the cam-shaft. In the position shown, the gas-admission cam *d* will come under the reel *c*, and will start to lift it at the beginning of the admission stroke. The reel *c* is loose on a spindle at the end of the horizontal lever *e*, and the vertical rise of the spindle due to the action of the cam opens the gas valve by a system of levers not shown in the figure. If the engine speeds up, the rise of the governor balls raises the sleeve on the governor spindle, lifts the horizontal arm of the bell-crank lever

Fig. 59. Governor of Otto Engine.

fulcrumed at *a*, and shifts the forked end *b* of the vertical arm to the right, carrying the reel *c* with it, so that the cam no longer engages it and no gas is admitted. When the speed comes down to normal, the reel is moved back, and the admission of gas again takes place. The hit-and-miss method is open to the objection that it makes the speed of the engine very irregular at any other than full load. Even at full load, with the Otto cycle and a single-acting cylinder, there is only one motive stroke or impulse in four strokes, instead of one every stroke as in a double-acting steam engine. If the engine governs by the hit-and-miss method and is running at half-load, half the explosions will be omitted, and there will be but one motive stroke in eight; at one-third load, there is but one motive stroke in twelve; and at quarter-load, one in sixteen. Running at quarter-load, the engine will be speeded up during the motive stroke, and will slow down during the succeeding fifteen strokes, till it gets to normal speed again. The actual variation in speed at low loads can be reduced by use of a heavy fly-wheel; but with this method of governing, it is too great for use when close regulation is necessary, as, for example, in electric lighting. There is an incidental advantage in the use of this method, in that, during the idle cycles, the cylinder is flushed out by the *scavenging* charge of air, which makes the next explosion more powerful.

The omission of an explosion is sometimes effected in engines which have an automatic admission valve, by the action of the governor in keeping the exhaust valve open throughout the cycle. The free communication between the cylinder and the outside through the exhaust valve prevents the formation, during the admission stroke, of the vacuum necessary to open the admission valve. Consequently, so long as the exhaust is open, the admission valve will remain closed; the cylinder will contain only products of combustion; and no explosion can occur.

Variable-Impulse System. The amount of work done in a given gas engine depends on the strength of the charge (*qualitative governing*) on its amount (*quantitative governing*) on the timing of the ignition, and on several other factors. The engine can be governed by the variation of *any one* of these; and the three specifically mentioned are all in regular use for this purpose.

Purchase full membership to immediately unlock this page

DELVE INTO FANTASY, MAGIC, MYTHOLOGY & FOLKLORE

Forgotten Books' Full Membership gives access to 797,885 ancient and modern, fiction and non-fiction books.

Continue

*Fair usage policy applies

time for its completion. A comparison of the areas of Figs. 24 and 25 shows the effect of a weaker mixture on the power of the engine.

It is found in practice that there is a certain strength of the explosive mixture which gives the most economical running of the engine. It is obviously desirable to run the engine with a mixture of this strength; and that can be done when a hit-and-miss governor is used. When it is desired to have an impulse every cycle, a constant strength of mixture can be maintained if the power of the engine is controlled by varying the *amount of the mixture* taken in. An example is shown in Figs. 61 and 62, of the actual mechanism used for this purpose. Gas from the passage *G* enters a port in the cylindrical valve *A*, and meets air which enters from *D* through similar ports. The mixture passes out of the valve through a large port near the top, and goes through *C* to the cylinder when the inlet valve *D* is open. The relative amounts of gas and air are regulated by the two levers *H H*, which are connected to entirely independent cylindrical shells inside the valve *A*, and which can rotate them so as to cover up more or less of the lengths and therefore of the areas of the gas and air ports respectively. With the two levers in constant positions, the areas for admission of gas and air to the cylindrical valve *A* will be fixed, and consequently the strength of the mixture will be constant. The actual amount of the mixture entering the cylinder is controlled by the governor *B*, which works an internal cylindrical valve in such way as to throttle the discharge port of the valve *A* when the speed increases.

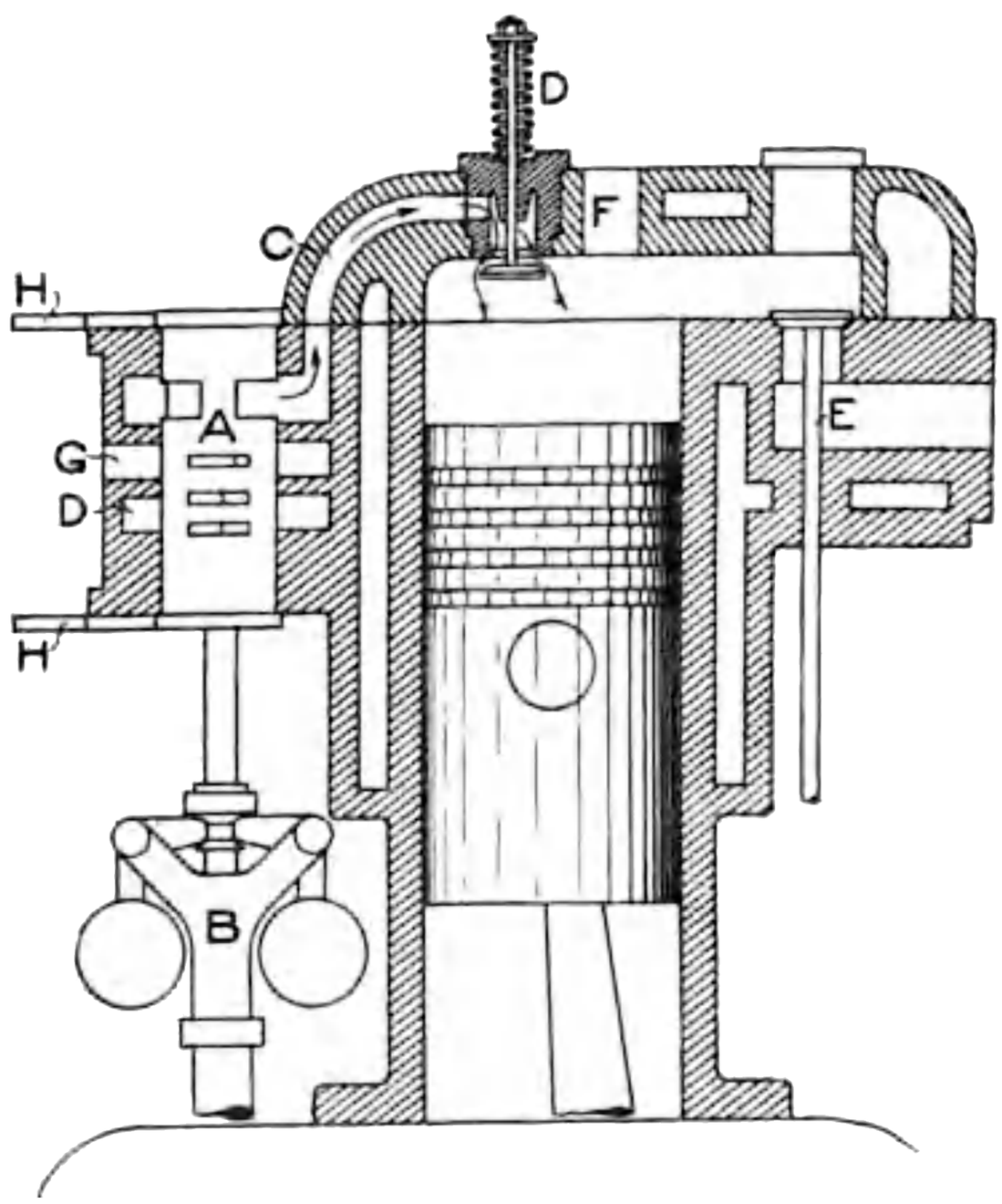

Fig. 61. Mixing Valve of Westinghouse Engine.

This method of governing permits a perfect adjustment of the work done in the cylinder each cycle, and consequently gives more uniform speed of the engine than any of the methods so far described. The throttling of the mixture imposes extra work upon the engine during the admission stroke, as the piston has to move out with a vacuum behind it. At the end of the admission, the pressure in the cylinder will be less and less as the load on the engine becomes smaller, and consequently the pressure in the cylinder at the end of compression is less as the load decreases. With decreased compression, the combustion of the mixture is slower. This is well shown in Fig. 63, which gives a series of indicator cards taken at different loads from an engine using a strong mixture and a throttling governor.

Fig. 62. Governor of Westinghouse Engine.

Another method of accomplishing the same result is to admit a mixture at atmospheric pressure for part of the admission stroke only, the duration of the admission being determined by the governor. This method of governing gives an indicator card similar to Fig. 23. The difference between an engine governing in this way and one governing by the throttling method, is similar to that between a Corliss steam engine and a throttling steam engine. The advantage of *cut-off* governing is in the decreased work done by the engine in drawing the charge into the cylinder. The use of a partial charge, whether obtained by throttling or by cutting-off, permits the expansion of the exploded mixture to a pressure lower than is possible in an engine admitting a full charge and having the same pressure at the end of compression. This is the practical method of obtaining the increased expansion, the advantage of which has been already pointed out.

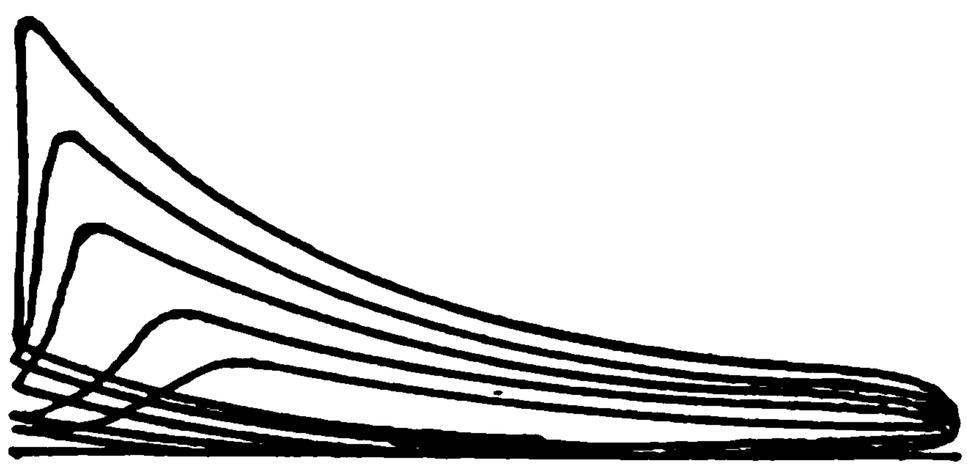

Fig. 63. Indicator Cards Taken at Different Loads.

The best of the modern methods of governing is a combination of the qualitative and quantitative methods. As the power of the engine decreases, the strength of the mixture is decreased till the most economical mixture is reached. For lower loads this most economical mixture is kept, but the amount of it admitted to the cylinder is decreased.

When economy is not of the greatest importance, the power of the engine may be controlled by *varying the point of ignition.* It has been shown already (Fig. 26) that the power of the engine decreases as the lead of the ignition becomes less. If the ignition occurs after the beginning of the stroke, the lead is said to be negative, and the power is greatly decreased. If the lead is increased (Fig. 27), there still results a decrease of power. The control of the power by varying the ignition is always uneconomical, but the method is one of extreme simplicity.

STARTING

A gas engine will not start itself in the way a steam engine does when steam is turned on. It is necessary to get the engine in motion by means of some special source of power, before it can take up its normal cycle of operations. Generally this special source of power is not adequate to get the engine moving rapidly when it is connected to any considerable load; it is always preferable and often necessary to throw the load completely off the engine till it gets under way.

In the normal running of an engine, the ignition of the charge occurs before the end of the back stroke; and if the time of ignition is kept the same when starting, there is the possibility, often the certainty, that the high pressure of the explosion acting on the piston before the crank has reached dead center, will overcome the inertia of the engine (which is small because of its low speed) and will reverse its direction of rotation. The ignition has to be retarded by some device, so that it will not occur till after the crank has passed dead center. An example of a device for retarding the ignition (with make-and-break ignition) is given in Fig. 64. The igniter rod *A* (compare with *f*, Fig. 33) which is worked by a crank on the side shaft *B*, is supported during normal running on the reel *C*, which is loose on the fixed spindle *D*. In the position shown, it is just about to trip the

Purchase full membership to immediately unlock this page

HISTORY

Tens of thousands of important historical sources, many previously unobtainable, are now available for the first time with a Forgotten Books Full Membership.

Unlimited Access
$8.99/month

Continue

*Fair usage policy applies

An arrangement for starting a multi-cylinder engine with compressed air is illustrated in Figs. 4 and 65. A compressor (Fig. 65), which is driven by a belt from the engine, forces air into a storage tank, and brings it to a pressure of about 160 pounds. In case of need, the compressor can be operated by hand. When the engine is to be started, the compressed air can be admitted to one of the cylinders. The cam *B* (Fig. 4) on the upper shaft is first thrown out of action by a special device, so that the inlet valve *J* cannot open. The hand-lever on the outside of the crank-case near the cam *A* is thrown over, putting the ordinary exhaust cam *A* out of action, but bringing into action a double cam which keeps the exhaust valve *E* open throughout every up-stroke of the engine. Another cam on the same shaft is brought into action at the same time, and operates a starting valve (not shown) on the pipe from the compressed-air reservoir, admitting compressed air to the cylinder on every down-stroke. The cylinder then acts as a compressed-air engine till the explosions begin in the other cylinders, when the cams *B* and *A* are brought back to their normal positions and the starting cylinder functions normally. In other engines, compressed air is admitted to the cylinder during the expansion stroke, by manual operation of a special valve. After two or three admissions during successive cycles, the engine will attain speed enough to permit the opening of the gas valve and the commencement of the cycle.

Fig. 65. Air-Compressor.

With engines up to 50 horse-power, a common method of starting is to ignite a charge which has been drawn into the engine by turning it over by hand. The engine is brought to the beginning of the ex-

pansion stroke, and a definite amount of gasoline is put into a cup which connects with the cylinder through an open cock. The engine is then pulled over till the piston has made half its forward stroke, air being drawn in and forming an explosive mixture with the gasoline which enters at the same time. The gasoline valve is then closed, and the engine turned quickly in the opposite direction; the charge is compressed as much as possible, and then ignited. The ignition is brought about by tripping the electric igniter by hand,

Fig. 66. Starting Gear of the Fairbanks-Morse Engine.

or by the use of a special detonator. It is not possible, with a loaded engine, to compress the charge much by hand, so that this method is applicable only to engines of moderate size which can be disconnected from their starting load.

If the engine has to start under moderate load, it is generally necessary to supply the engine with a charge which has been compressed to a high pressure. This can be accomplished by setting the engine with the crank about ten degrees past the dead center on the expansion stroke, and then pumping an explosive mixture into the cylinder (Fig. 66) till the piston begins to move. At that instant

the charge is ignited, and the work done by the expansion of the exploded charge will be enough to start the engine on its cycle of operations. Another method of accomplishing the same thing is to connect the cylinder *E* (Fig. 67) with a special starting chamber *D*. When the engine is being shut down, the special inlet valve *A* is lifted from its seat, so that at each suction stroke air is drawn through the chamber *D* by way of the valve *F*. The chamber *D*, the cylinder, and the connecting pipe are thus filled with pure air at atmospheric pressure. When the engine is to be started, the gas-cock *C* is opened, and gas flows both into the chamber *D* and into the cylinder, a cock on the cylinder being opened. A pilot light burns across the opening above the valve *F*, and after a short time a combustible mixture of air and gas issues and catches fire. If the cock *C* is then closed, the flow of the explosive mixture stops, and the flame consequently shoots back past the valve *F* and ignites the mixture in *D*, closing the valve F against an upper face by the force of the explosion. The flame proceeds to the cylinder, the contents of which will have been compressed by the explosion in *D*, and causes an explosion there.

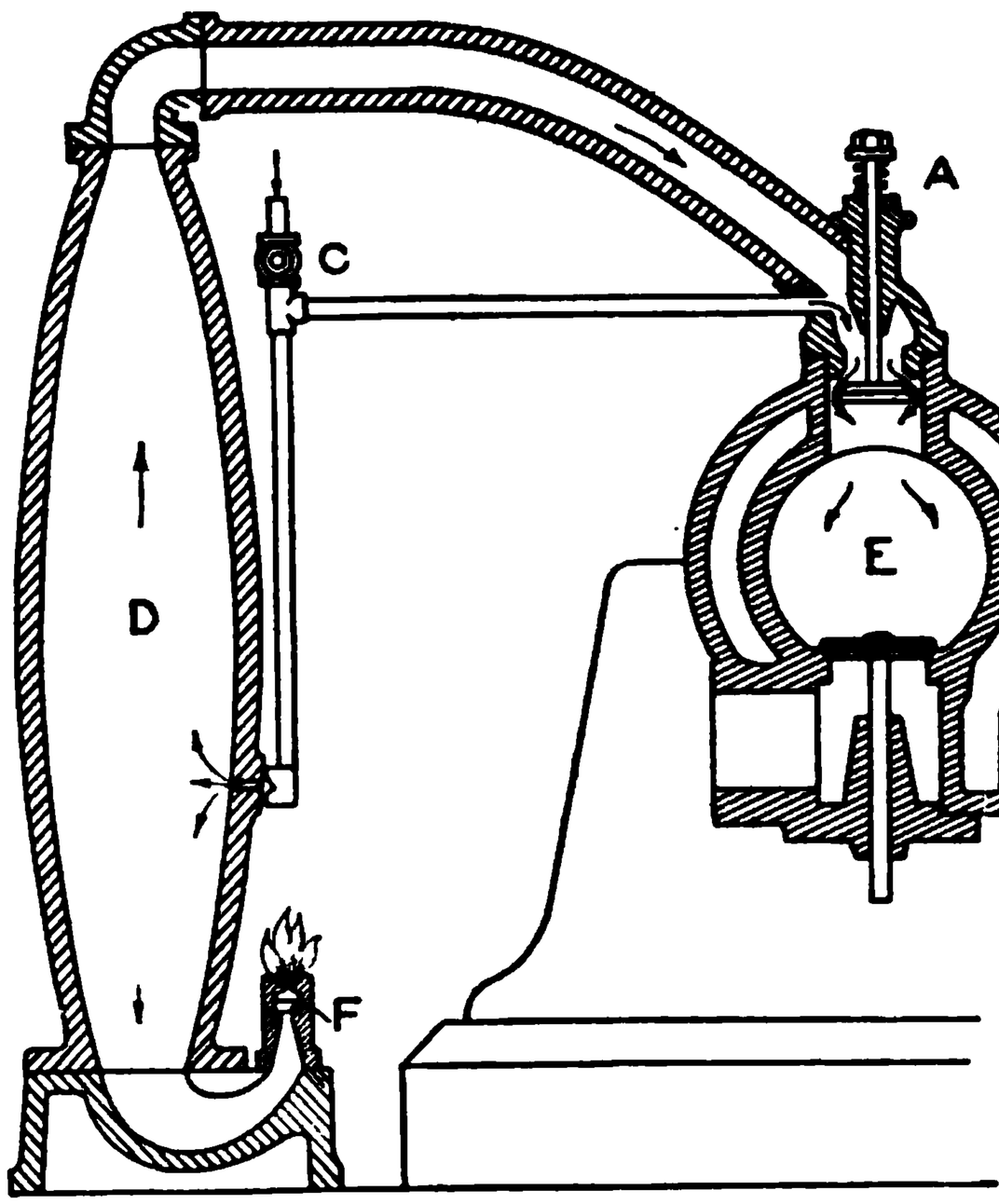

Fig. 67. Method of Supplying Engine with Compressed Charge.

WATER JACKETS

In all the preceding sectional views of gas-engine cylinders, it will be seen that the cylinder barrel and the cylinder head have double walls, and in every case provision is made for the active circulation of water through the space between the two walls. Without the use of a *water jacket* or some equivalent device, the engine would be

Purchase full membership to immediately unlock this page

DELVE INTO FANTASY, MAGIC, MYTHOLOGY & FOLKLORE

Forgotten Books' Full Membership gives access to 797,885 ancient and modern, fiction and non-fiction books.

Continue

*Fair usage policy applies

of density between the cold and the heated water. In large engines, when a large amount of water must be circulated, this method is generally too cumbrous; and the water is taken from some constant source of supply, such as the city mains. The piping and valves are always so arranged that it is possible to draw the water from the jacket.

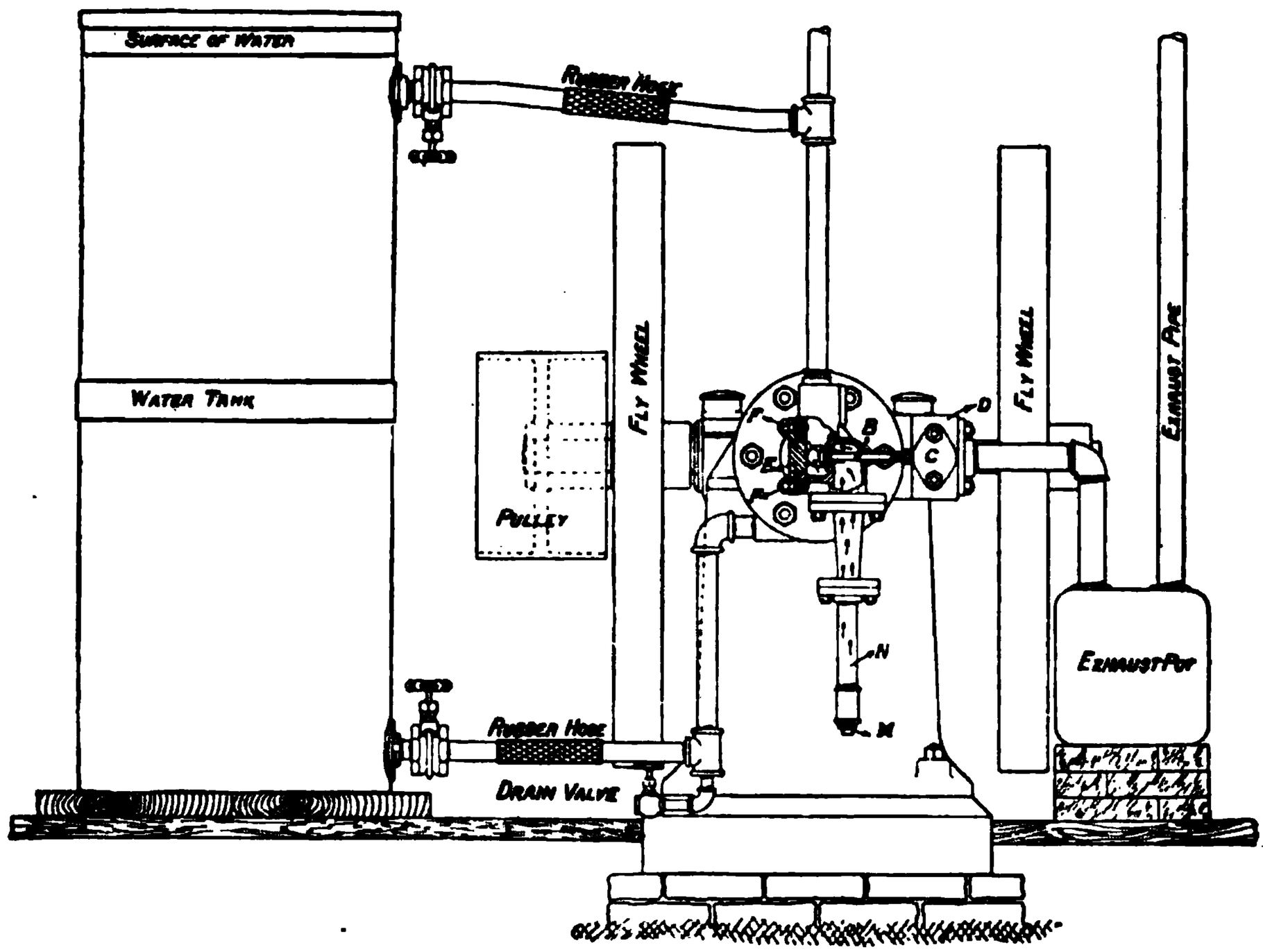

Fig. 69. Arrangement of Water Circulation for Jacket.

With portable engines, such as are used for agricultural purposes, it is generally impracticable to arrange for a water circulation in the jacket. In such cases it is usual to have a large water chamber on top of the cylinder (Fig. 69A), communicating with the jacket and open on top to the atmosphere. The water in the jacket will gradually boil away, but may be replenished occasionally by pouring in a bucketful of water.

THE EXPLOSIVE MIXTURE

The air used in the engine may be taken from the engine room or from the outside. The inrush of air to the air-pipe makes a noise which is often objectionable in the engine room, but which can be greatly reduced if the air is taken from a large chamber, as in Fig. 14, where it is taken from the base of the engine.

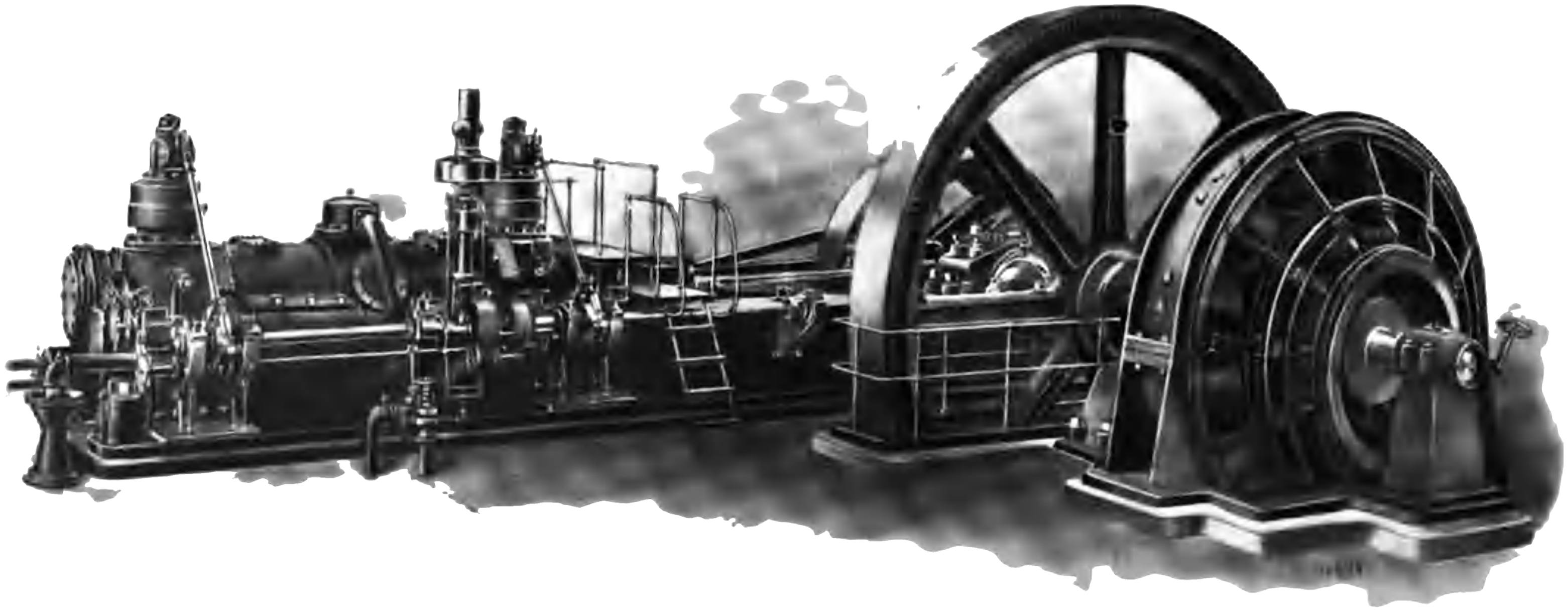

SINGLE-CYLINDER KOERTING TWO-CYCLE DOUBLE-ACTING GAS ENGINE, DIRECT-CONNECTED TO GENERATOR
De La Vergne Machine Co., New York, N. Y.

Purchase full membership to immediately unlock this page

HISTORY

Tens of thousands of important historical sources, many previously unobtainable, are now available for the first time with a Forgotten Books Full Membership.

Unlimited Access
$8.99/month

Continue

*Fair usage policy applies

The simplest device is to have the exhaust pipe discharge into an exhaust chamber or pot (see Fig. 69) before going to the air; the enlargement of volume causes a corresponding fall in pressure, and the final escape to the air is consequently at a diminished velocity.

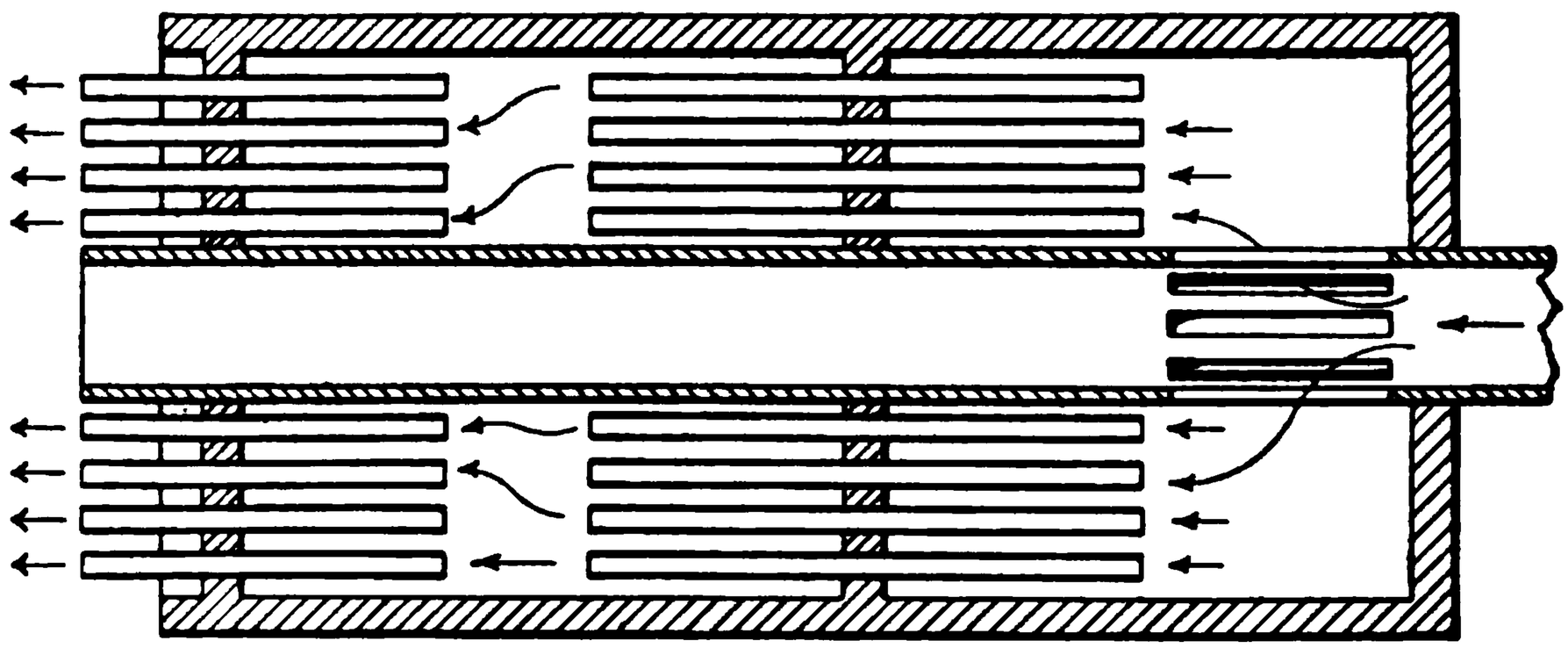

Fig. 70. Slits in Exhaust Pipe and Pipes in Muffler, for Effecting Silent Exhaust.

It is better, in larger engines, to have the admission of the gases to the silencer through slits in the exhaust pipe (Figs. 70 and 71), as this prevents too sudden an expansion into the exhaust chamber. The escape of the gases from the muffler may be either through

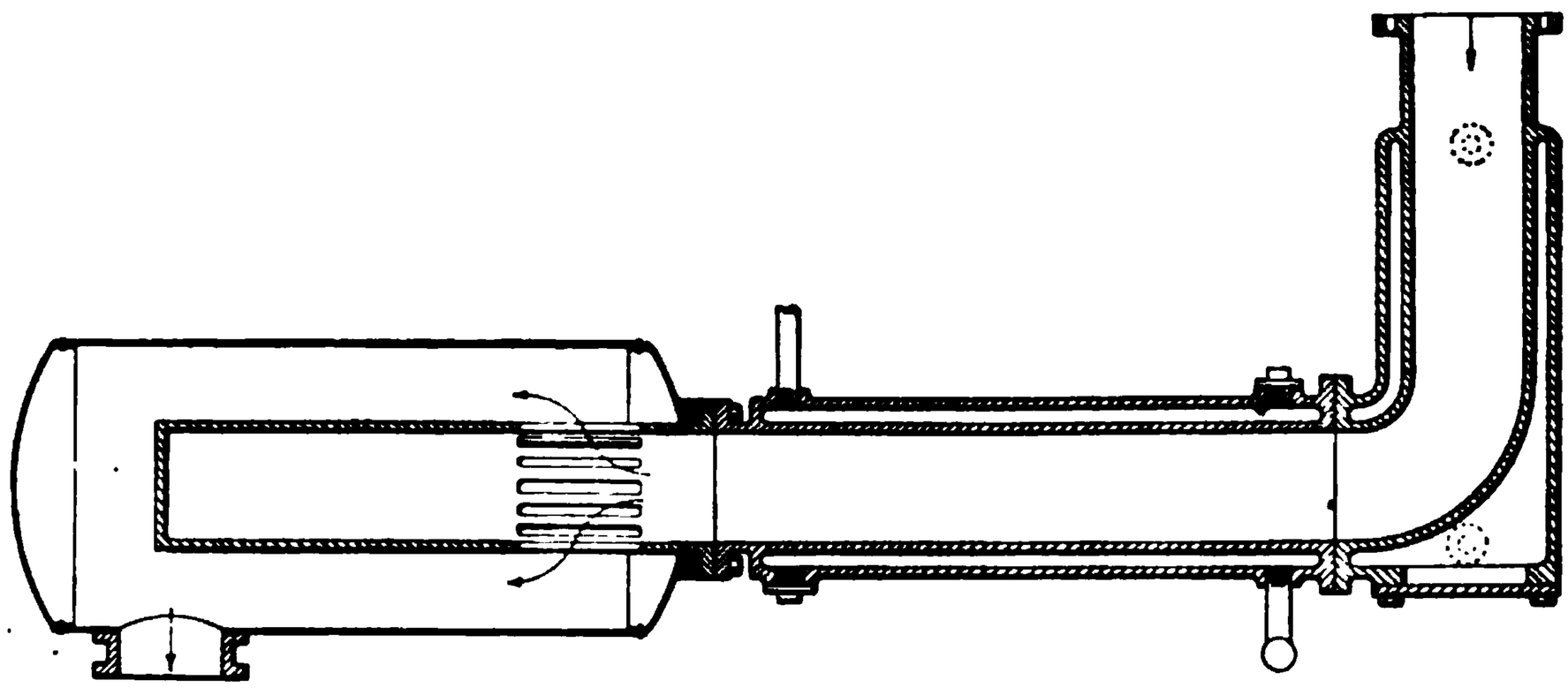

Fig. 71. Water-Jacketed Exhaust Pipe, with Slits Opening into Muffler, for Reducing Noise of Exhaust.

numerous holes in the periphery of the muffler, or through short lengths of small-sized pipe (Fig. 70), or through holes in sheet-metal cones fixed inside the muffler (Fig. 72). The repetition of the muffling device, forcing the gases to go through holes in concentric drums, or through two sets of pipes (Fig. 70), or through several cones (Fig. 72), insures quieter action of the exhaust, but at the ex-

pense of some back-pressure in the cylinder, which, in bad cases, may seriously decrease the effective work done there. In Fig. 72 a central tube is shown, to which the gases have free access, and from the end of which they escape with high velocity; this gives a so-called *ejector* action to the muffler, the high velocity of the gases escaping from the central tube creating a partial vacuum in the nozzle and helping to suck the gases through the muffler.

It is claimed that an increase of power can be obtained with a well-designed muffler using this principle. In large engines it is customary to jacket the exhaust pipe (Fig. 71), and also to inject some of the jacket water into the pipe. This has the effect of lowering the

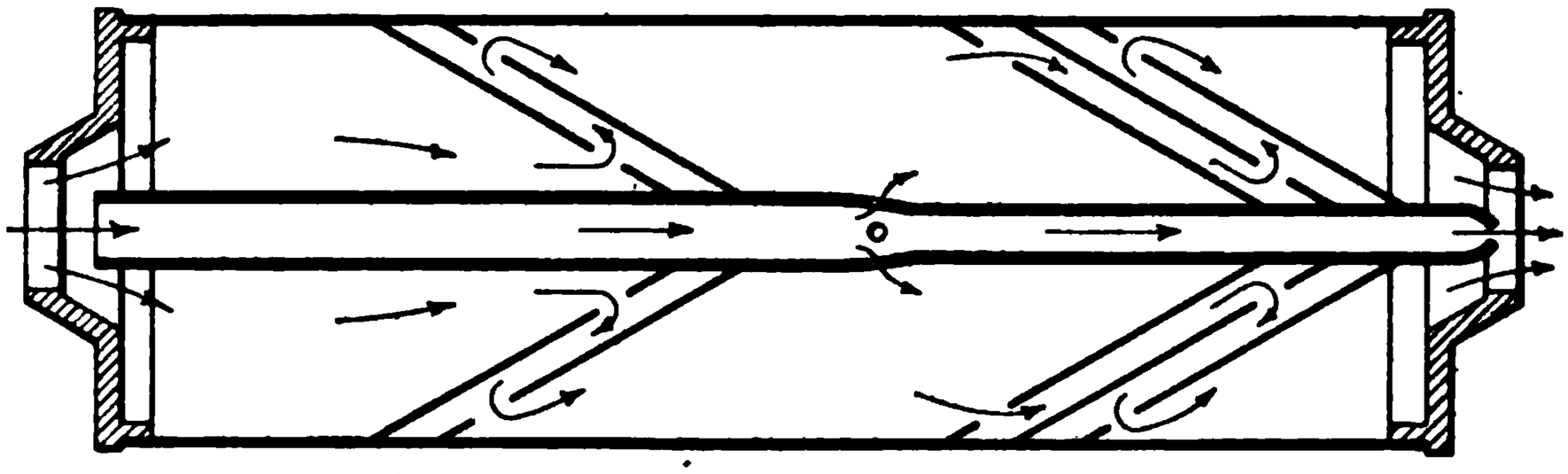

Fig. 72. Method of Silencing Exhaust by Passing Exhaust Gases through Holes in Sheet-Metal Cones inside Muffler.

pressure of the exhaust gases by cooling them; and it is a most satisfactory method, since it brings no back-pressure upon the engine. It is not, however, sufficient by itself to make the exhaust noiseless.

For automobile use, the muffler is usually made about twelve times the volume of a single cylinder, however many cylinders there may be. It is also provided in some cases with a *muffler cut-out*, permitting direct exhaust to the atmosphere, which is useful in case of the muffler becoming clogged, and also for ascertaining, by the noise of the exhaust, whether the engine is exploding regularly. To make the noise nearly imperceptible, a good plan in stationary practice is to have the pipe discharge near the bottom of a pit filled with large stones.

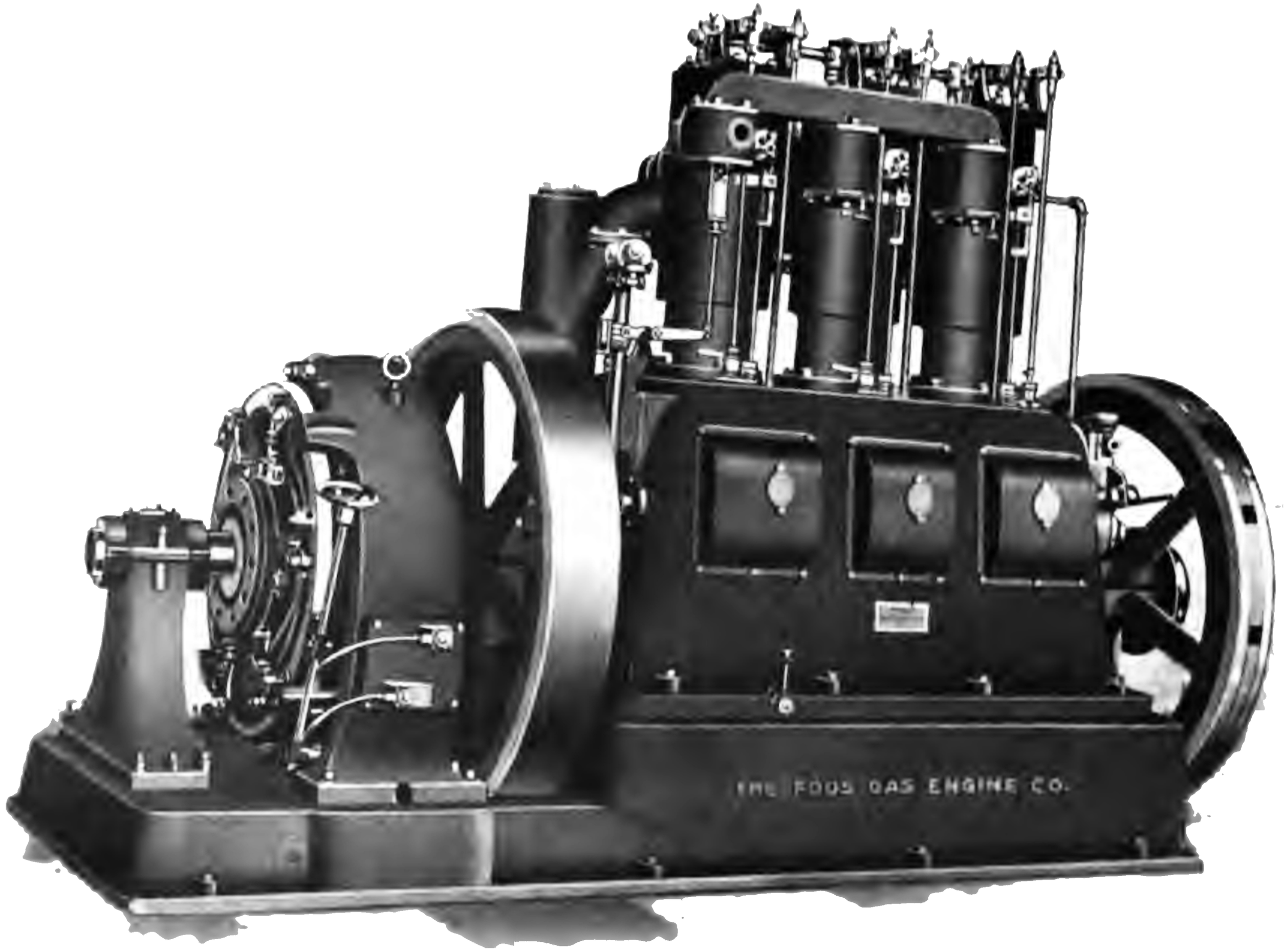

THREE-CYLINDER VERTICAL GAS ENGINE DIRECT-CONNECTED TO GENERATOR
The Foos Gas Engine Co., Springfield, Ohio.

Purchase full membership to immediately unlock this page

DELVE INTO FANTASY, MAGIC, MYTHOLOGY & FOLKLORE

Forgotten Books' Full Membership gives access to 797,885 ancient and modern, fiction and non-fiction books.

Continue

*Fair usage policy applies

Scavenging. Another method of increasing the efficiency is by what is known as *scavenging* the cylinder. In the ordinary Otto cycle, the charge compressed consists of a mixture of fresh air and gas with the burned gases remaining in the clearance space from the previous cycle. If these burned gases are expelled from the cylinder by a charge of fresh air before the admission of the explosive charge, the force of the explosion and the efficiency are increased. The clearing-out or scavenging of the cylinder with fresh air, has been accomplished in several ways. The simplest method is by the use of an exhaust pipe of such length that the gases, exhausting from the cylinder with great velocity, create a vacuum in the cylinder near the end of the exhaust stroke. This vacuum causes the automatic air-admission valve to open; and the consequent rush of air from the air-valve to the exhaust port flushes out the cylinder, especially if the air and exhaust valve are on opposite sides of the clearance space. Occasional scavenging is obtained in engines governing on the hit-and-miss principle, each idle cycle flushing out the cylinder, with the result that the succeeding explosion is of greater force than the normal explosion.

Compounding. It has been pointed out already that the pressure is high at the end of the expansion in the Otto cycle, and that the efficiency of the cycle can be increased considerably if the gas is expanded more completely. Ordinary steam engine practice suggests that the more complete expansion can be obtained by *compounding*; but no attempts so far to make a satisfactory compound gas engine have proved successful. The practical method of obtaining more complete expansion is to take into the cylinder a diminished charge. The two methods of accomplishing this have been discussed already. The only fundamental difference between engines using these two methods, is that in one case the governor controls the amount of the opening of the admission valve, while in the other case it determines the instant at which the admission valve shall close.

Double-Acting. One of the main objections urged against the Otto cycle is that it requires two revolutions of the engine for its completion, so that the expansion or motive stroke comes but once in four strokes. There results from this a very irregular driving effort, making large fly-wheels necessary if the main shaft is to rotate uniformly, or else requiring the use of several engines working on the

same shaft. The motive efforts can be made twice as frequent if the cylinder is *double-acting*, with admissions and explosions occurring on both sides of the piston. Many large engines are now being made double-acting; but the practical troubles in keeping the piston, piston-rod, cylinder, and stuffing-box cool enough for satisfactory

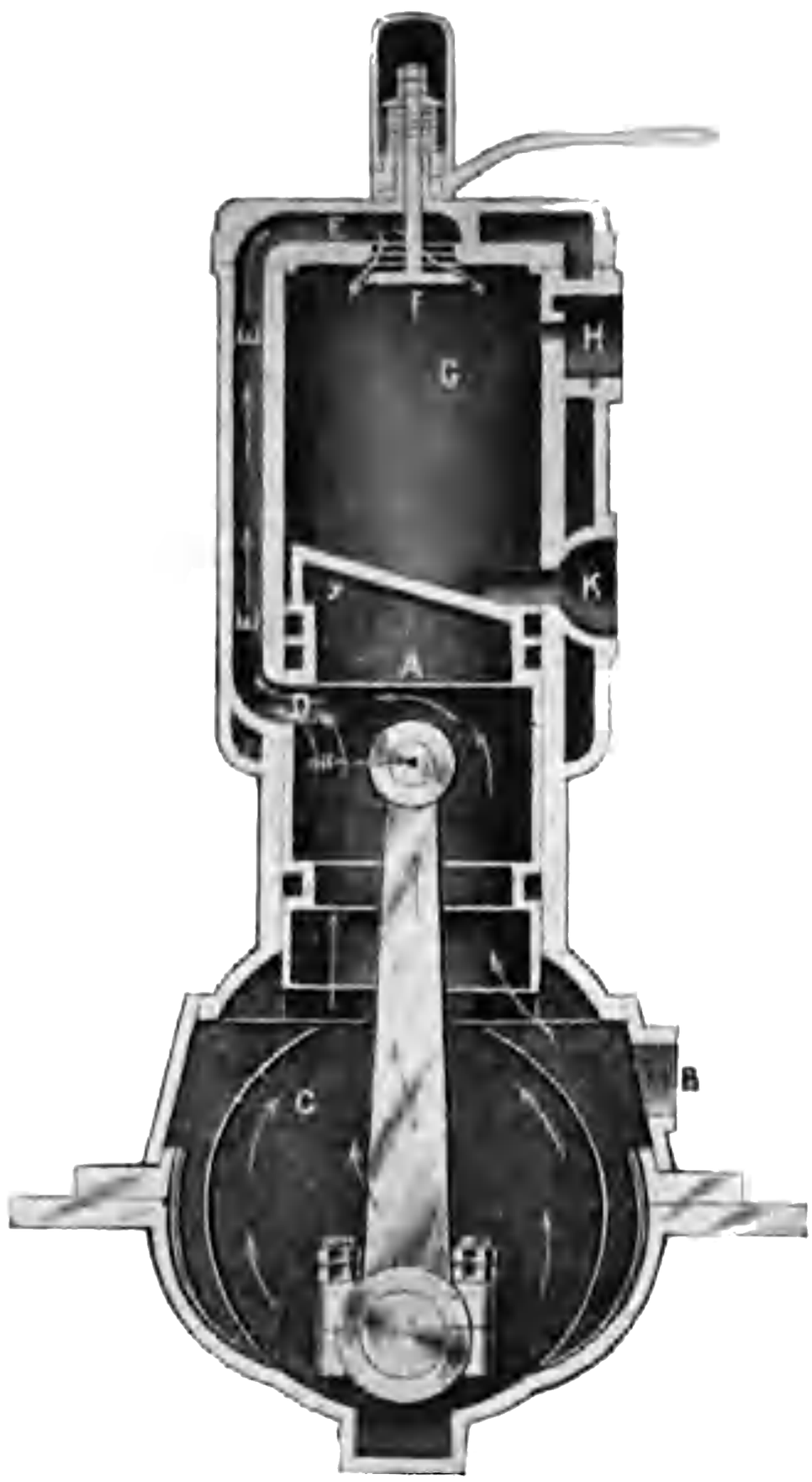

Fig. 73. Smalley Two-Cycle Engine. Piston at bottom of stroke.

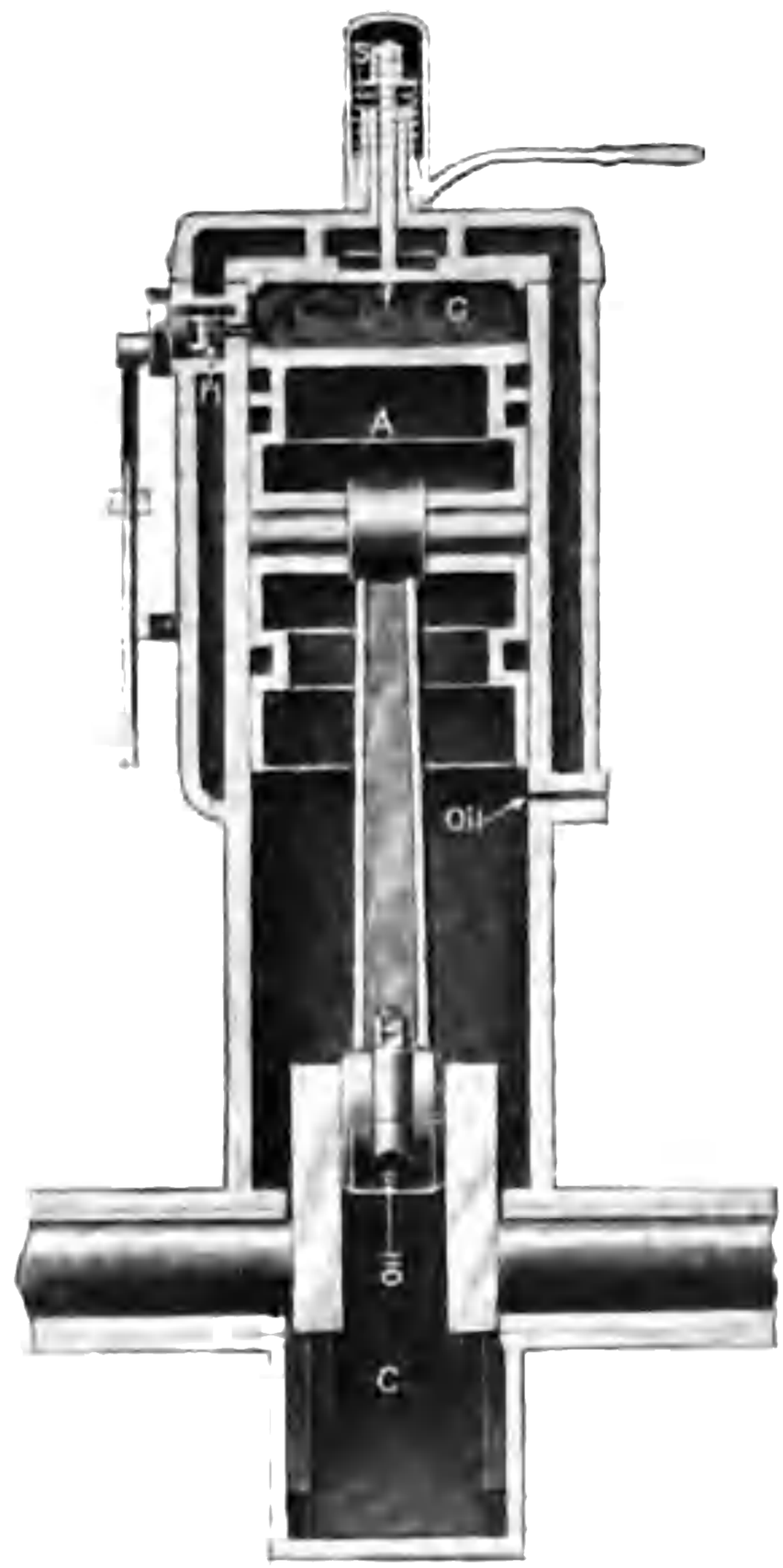

Fig. 74. Smalley Two-Cycle Engine. Piston at top of stroke.

working have prevented the use of double-acting cylinders in engines of small size.

Two-Cycle Engines. An increased frequency of the expansion or motive stroke can be obtained by a slight modification of the Otto cycle which results in the cycle being completed in two strokes, and which is consequently called the *two-cycle* method. Single-acting engines using the two-cycle method give an impulse every revolution, and consequently not only give greater uniformity of speed of rotation

of the crank-shaft, but also develop 60 to 80 per cent more power than four-cycle or Otto-cycle engines of the same size. Moreover, they are generally of great simplicity, having fewer valves than the four-cycle engines. An example is shown in Figs. 73 and 74, of a two-cycle engine of small size and of the two-port type; Fig. 73 is a vertical section showing the piston at the bottom of its stroke, and Fig. 74 is a vertical section in a plane at right angles to the previous section plane and showing the piston at the top of its stroke. As the trunk piston *A* makes its upward stroke, it creates a partial vacuum below it in the closed crank-chamber *C*, and draws in the explosive charge through *B*. On the downward stroke, the charge below the piston is compressed to about 10 pounds pressure in the crank-chamber *C*, the admission through *B* being controlled by an automatic valve (not shown) which closes when the pressure in *C* exceeds the atmospheric pressure. When the piston reaches the lower end of its stroke, it uncovers exhaust port *K*, and at the same time brings admission port *D* in the piston opposite the by-pass opening *E E E*, and permits the compressed charge to enter the cylinder *G* through the automatic admission-valve *f*, as soon as the pressure in the cylinder falls below that of the compressed charge. The return of the piston shuts off the admission through *E*, and the exhaust through *K*, and compresses the charge into the clearance space. The charge is then exploded (Fig. 74), and the piston makes its down or motive stroke. Near the end of the down-stroke, after the opening of the exhaust port *K*, the admission of the charge at the top of the cylinder sweeps the burned gases out, the complete escape being facilitated by the oblique form (Fig. 73) of the top of the piston. The engine is so designed that the piston on its return stroke covers the exhaust port *K* just in time to prevent the escape of any of the entering charge. The processes described above and below the piston are simultaneous, the up-stroke being accompanied by the admission below the piston and compression above it, while the down-stroke has expansion above the piston and a slight compression below it. The very short interval of time between the beginning of the exhaust and the admission of the new charge (which enters as soon as the pressure in the cylinder has fallen enough to permit the admission valve to open), makes premature ignition of the charge, or *back-firing*, of not infrequent occurrence. If

Purchase full membership to immediately unlock this page

HISTORY

Tens of thousands of important historical sources, many previously unobtainable, are now available for the first time with a Forgotten Books Full Membership.

Unlimited Access
$8.99/month

Continue

*Fair usage policy applies

used a revolving disc valve turning with the crank and containing a slot which registers with the crank-case inlet during part or all of the up-stroke of the piston. The disc is pressed against its seat by a light spring. This arrangement makes the admission of the charge to the crank-case positive, and permits of adjustment of the duration of the admission, and consequently of the volume admitted. It sacrifices, however, the reversibility of the engine.

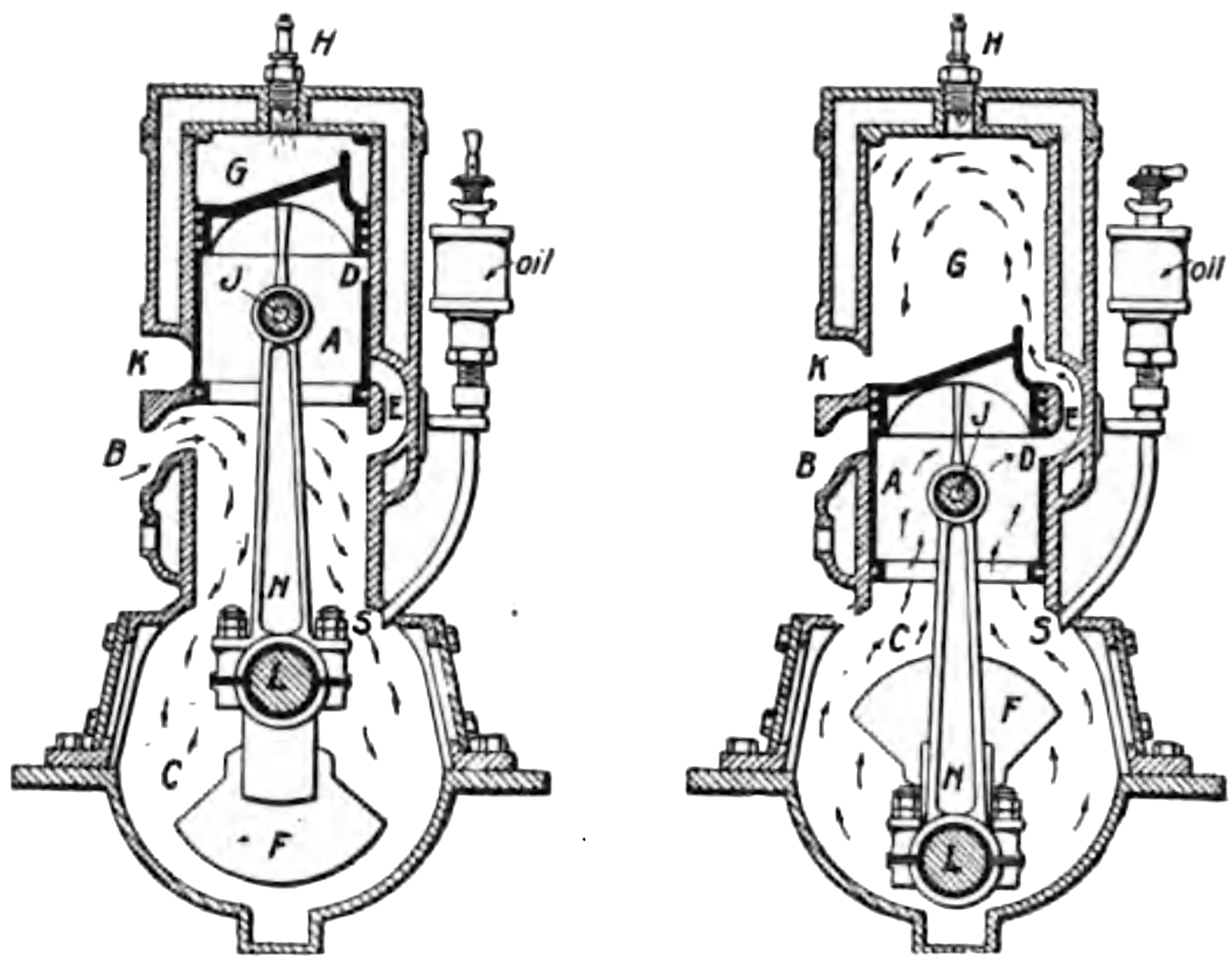

Fig. 76. Smalley Three-Port Two-Cycle Engine.

A further and last modification of this engine makes it entirely valveless and of the utmost simplicity. It is illustrated in Fig. 76. The admission of the charge is through the port *B*, which is covered and uncovered by the piston, and which consequently does not require any automatic valve. During the up-stroke of the piston, a vacuum is created in the closed crank-case, till near the top of its stroke, when the admission port *B* is uncovered, and the explosive charge rushes into the crank-case, filling it until the pressure there is approximately atmospheric pressure. The rest of the operations are exactly as in the engine just described, the charge being compressed in the crank-casing during the down-stroke, and then transferred through a port *D* in the hollow piston, and through the port *E* in the cylinder wall, to the upper side of the pis-

ton when this latter is near the end of its down-stroke. This modification is generally known as the *three-port type of the two-cycle motor.*

The power of a small two-cycle engine can be varied by throttling—that is, by varying the amount of the charge taken into the cylinder. This is accomplished either by throttling the admission to the crank-case, or else by throttling in the by-pass between the crank-case and the cylinder. There is probably but little to choose between these two methods.

The great compactness and simplicity of the small two-cycle motor are obtained at some cost of efficiency. In all gas engines a certain amount of work has to be done in getting the explosive mixture into the cylinder during the suction stroke, and in expelling the exhaust gases during the exhaust stroke. This gas-friction work is represented on the indicator card of an Otto-cycle engine by the negative loop (Figs. 3 and 24), which has to be subtracted from the positive loop in order to give the indicated horse-power of the engine. In the four-cycle engine, this negative work is usually from 2 to 5 per cent of the total work, and is a dead loss. In the two-cycle engine, considerably more work must be done in order to get the gas into the cylinder. The time available for the admission of the charge is extremely short. In a small high-speed engine, it will be from one- to two-hundredths of a second; in a large two-cycle engine, it may amount to one-twentieth of a second. In any case it will not be more than one-third to one-fifth of the time available for admission in a four-cycle engine. Moreover, this admission takes place while the exhaust gases are going out rapidly, and consequently while the pressure in the cylinder is appreciably greater than atmospheric pressure. In order to overcome the back-pressure of the exhaust, and also in order to be able to enter with the very high velocity necessitated by the short duration of admission, the explosive mixture has to be pre-compressed to 8 or 10 pounds above atmospheric pressure, before its admission to the cylinder. Whether this pre-compression is done in the crank-case, as in small engines, or in separate compression pumps, as in large engines, it requires the expenditure of a considerable amount of work—an expenditure which decreases the available power of the engine without giving anything in return other than the possibility of maintaining the cycle of operations. This

loss of power in compressing the charge, is ordinarily from 15 to 20 per cent of the total work done in the cylinder.

Another loss of efficiency in the two-cycle engine results from the fact that the admission and exhaust ports are open at the same time. An endeavor is made to have the exhaust port close before any of the entering charge has reached it; but it is not practically possible to accomplish that—particularly in an engine which is to run at various speeds. If, in an endeavor to prevent such loss of gas direct to the exhaust, the exhaust port closes early, too large a volume of the exhaust gases will be retained in the cylinder; the amount of the charge which can enter will be correspondingly decreased; and both the efficiency and the capacity of the engine will suffer. In larger engines, this trouble is to a great extent obviated by forcing air into the cylinder slightly ahead of the explosive charge, and closing the exhaust port when the charge of fresh air is passing through. This device is also valuable in preventing back-firing of the charge.

Besides its simplicity and compactness, the small two-cycle engine may claim reversibility as one of its advantages. The direction of rotation in the small valveless two-cycle engine is determined solely by the timing of the ignition. It is possible to reverse such a motor merely by making the point of ignition very early. This causes an explosion well before the ending of the compression stroke, and may develop sufficient pressure to stop the piston before it gets to the end of the stroke, and start it going in the other direction. When once started in the other direction, the ignition, if unchanged, will be a very late ignition, giving comparatively small power; shifting the ignition back a little will give the engine its full power in its reversed direction. This process is practicable only in small engines with light reciprocating parts; it is most convenient for small motor boat use.

The two-cycle engine develops on the average about 60 per cent more power than a four-cycle engine of the same size and speed; it uses from 10 to 20 per cent more gas per brake horse-power.

GAS-ENGINE FUELS

The fuels used in gas engines are extremely variable in origin, in composition, and in heat value. They consist almost entirely of the chemical elements carbon, hydrogen, and oxygen, and their com-

Purchase full membership to immediately unlock this page

DELVE INTO FANTASY, MAGIC, MYTHOLOGY & FOLKLORE

Forgotten Books' Full Membership gives access to 797,885 ancient and modern, fiction and non-fiction books.

Continue

*Fair usage policy applies

Coke-Oven Gas. When bituminous coal is heated in a retort, the products of the process are gas, tar, ammonia, and coke. In city gas plants, the first is the principal product, and the rest are by-products. There are in this country a considerable number of *by-product coke ovens* which carry out the same process as in city gas plants, but with a different purpose in view and with more complete separation of the by-products. The *coke-oven gas* which is obtained as a by-product from such ovens does not differ materially from coal gas.

Oil Gas. Oil gas is obtained by mixing the vapor of crude or other mineral oil with superheated steam, and sending the mixture to a retort where a temperature of about 600° F. is maintained. The vapor is there converted into a non-condensible gas very rich in hydrogen.

Blast-Furnace Gas. Blast-furnace gas is the gas that comes from the top of a blast furnace. In the past, it has either been burned there and consequently wasted, or has been burned under boilers for generating steam. It is a much weaker gas than any of the others described, but can be used most satisfactorily and economically in gas engines. Naturally it is available only at blast-furnace plants.

Producer-Gas. If gas is not taken from any of these sources, it can be generated specially for the engine in a *gas-producer*.

In the gas-producer, either air alone, or generally both air and steam, are sent through a thick bed of coal. The oxygen of the air, on first striking the zone of the incandescent coal, combines with the carbon to form carbon dioxide (CO_2); but this, on passing through the burning coal above, is reduced to carbon monoxide (CO), which escapes with the hydrogen and carbon monoxide resulting from the action of the steam on red-hot coal, and with the nitrogen which came in with the air. The resulting gas therefore consists almost entirely of carbon monoxide, hydrogen, and nitrogen. The large amount of nitrogen in the air (79 volumes in 100) makes producer-gas contain fifty per cent or more of that inert gas, and consequently gives it a low heat value.

The compositions of the various gases mentioned are given in Table II (p. 96). They are all rich in hydrogen and marsh gas, with the exception of blast-furnace gas and producer-gas. The presence of large quantities of hydrogen makes a gas engine peculiarly liable to

premature ignition. As this phenomenon is particularly pronounced and particularly objectionable in large gas engines, those gases only which contain not more than 10 to 12 per cent of hydrogen are desirable for large powers.

The heat of combustion of a cubic foot of each of the gases under the standard conditions (that is, with the gas at 60° F. and at a pressure of 14.7 pounds per square inch), is also given in Table II. There is a very large range in the values, the extreme range from natural gas to blast-furnace gas being a range of 12 to 1.

The volume of air chemically necessary for the combustion varies, however, through a range which is almost as great; for natural gas, it is nine times the volume of the gas; for blast-furnace gas, only two-thirds.

The heat of combustion of a cubic foot of the perfect explosive mixture is, for natural gas, about 100 B. T. U.; for blast-furnace gas, about 60 B. T. U.; that is, the heat of combustion of a cubic foot of the explosive mixture is not very different, even in the two extreme cases. In practice, more air goes to the cylinder with the gas than the amount that is chemically necessary; an excess of at least 20 per cent over that amount is usual. Such excess of air results in more complete combustion, and consequently gives greater economy. The table gives the average heat of combustion per cubic foot of the theoretical mixture; the actual mixture has, of course, a lower heat value per cubic foot.

Gas-Producers. Gas-producers are now constructed for converting all the various grades of coal into gas. There is considerable variety in the construction and method of operation, the variation in many cases being demanded by the nature of the coal which is to be gasified. The most common form of producer is designed for anthracite or coke, and its design is largely determined by whether the producer is to be under a slight pressure or a slight vacuum.

A good example of an anthracite gas-producer is shown in Fig. 77 under working conditions. The bed of coal, several feel thick, rests on a bed of ashes of about equal thickness, the ashes being supported on a solid circular table *a*. The blast-pipe *b* terminates near the top of the bed of ashes, the blast being discharged radially so as not to concentrate the combustion. The blast is generally produced either by a steam-jet blower or by a fan blower. In the latter

TABLE II

Composition, Heat Value, etc., of Fuel Gases

		Coal Gas	Water Gas (Blue)	Carburetted Water Gas	Natural Gas	Blast-Furnace Gas	Oil Gas	Producer Gas	
								From Anthracite or Coke	From Bituminous Coal
		Per Cent	Per Cent	Per Cent	Per Cent	Per Cent	Per Cent	Per Cent	Per Cent
Hydrogen	H_2	46.0	48.0	40.0	2.0	.7	58.4	13.0	10.0
Marsh Gas	CH_4	40.0	2.0	25.0	93.0	....	28.8	.8	3.0
Olefiant Gas or Ethylene	C_2H_4	5.0	....	8.5	.3	....	3.4	....	.5
Carbon Dioxide	CO_2	.5	6.0	3.0	.2	11.7	1.2	4.0	5.0
Carbon Monoxide	CO	6.0	38.0	19.0	.6	26.7	4.4	27.0	23.0
Oxygen	O_2	.5	.5	.5	.4	....	....	.5	.5
Nitrogen	N_2	2.0	5.5	4.0	3.5	60.9	3.8	54.7	58.0
B.T.U. per Standard Cu. Ft.		550–650	300–350	550–600	900–1,100	90–100	600–700	130–150	130–150
Air Chemically Necessary per Cu. Ft. of Gas.		5.7	3.9	5.0	9.0	.66	4.8	1.1	1.2
B.T.U. per Cu. Ft. of Ideal Mixture		90.0	73.0	96.0	100	58.0	110	67.0	64.0

Purchase full membership to immediately unlock this page

HISTORY

Tens of thousands of important historical sources, many previously unobtainable, are now available for the first time with a Forgotten Books Full Membership.

Unlimited Access
$8.99/month

Continue

*Fair usage policy applies

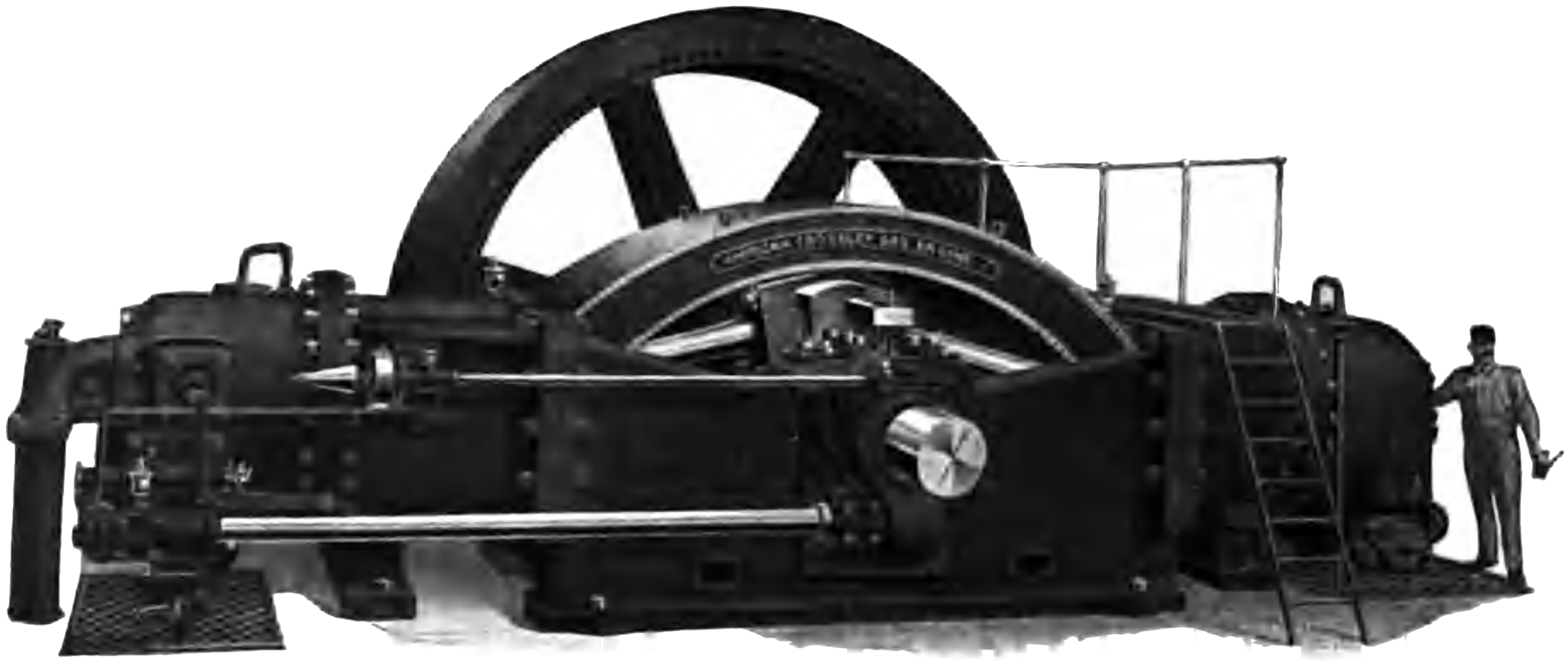

AMERICAN CROSSLEY GAS ENGINE.
Power and Mining Machinery Co.

case, steam is mixed with the air in the blast-pipe so as to keep down the temperature of the producer and to break up any clinkers that form. Fresh coal is supplied by a continuous automatic feeding device on top of the producer, which spreads the coal in a uniform layer over the upper surface. In most producers the coal is dumped in from above at intervals, and is spread occasionally by hand. The intermittent charging has the disadvantage that it causes considerable variation in the condition of the fire, and consequently in the composition of the gas generated. The bed of ashes is maintained of the desired depth, and the surplus ashes removed by rotating the grate *a* by means of gears worked through the crank *c*. As the grate is placed at some distance below the conical casing or *bosh*, the ash discharges uniformly around its periphery when it is revolved. This causes a uniform settling of the bed of ash, and also lets the bed of fuel settle so as to close up any channels which have been formed in it by the blast. The scrapers *d*, projecting a short distance into the ash bed, help the discharge of ash from the grate. The depth of the bed of ashes insures that the ash is completely burned and cooled before it is finally discharged.

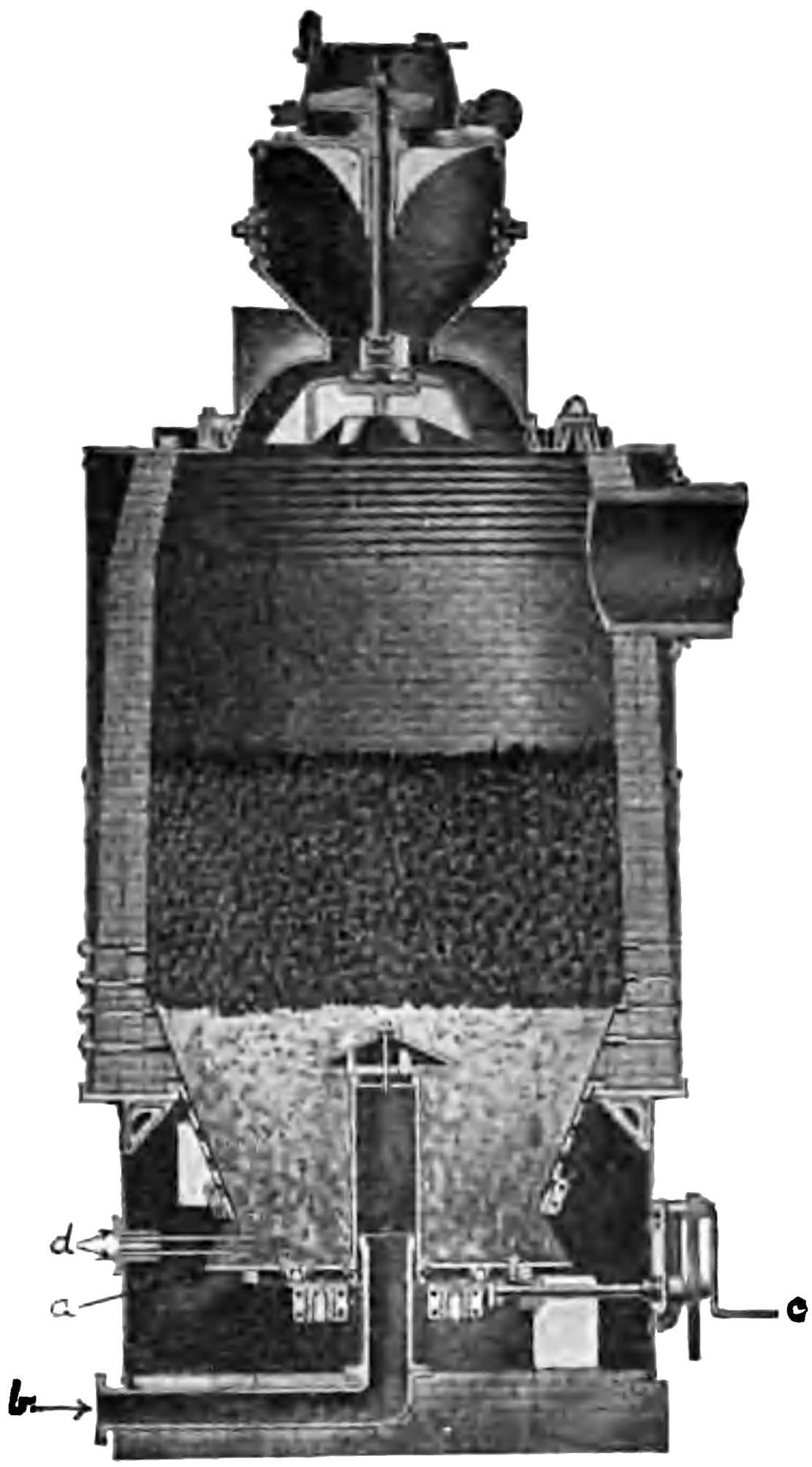

Fig. 77. Taylor Gas-Producer for Anthracite.

Producer Plants. Producer plants are of two kinds; the flow of air through the producer is caused either (1) by forcing air in

from below, or (2) by creating a partial vacuum above the fuel. The former is called a *pressure plant*; the latter, a *suction plant.*

The general arrangement of the *pressure type* of producer-gas plant is shown in Fig. 78, in which the arrows indicate the direction of flow of the gas. A small boiler supplies steam to the blower. The gas escapes from the producer at a high temperature, and goes to an *economizer*, where it gives up much of its heat either (1) to fresh air which is about to be forced through tubes in the producer, or (2) to water

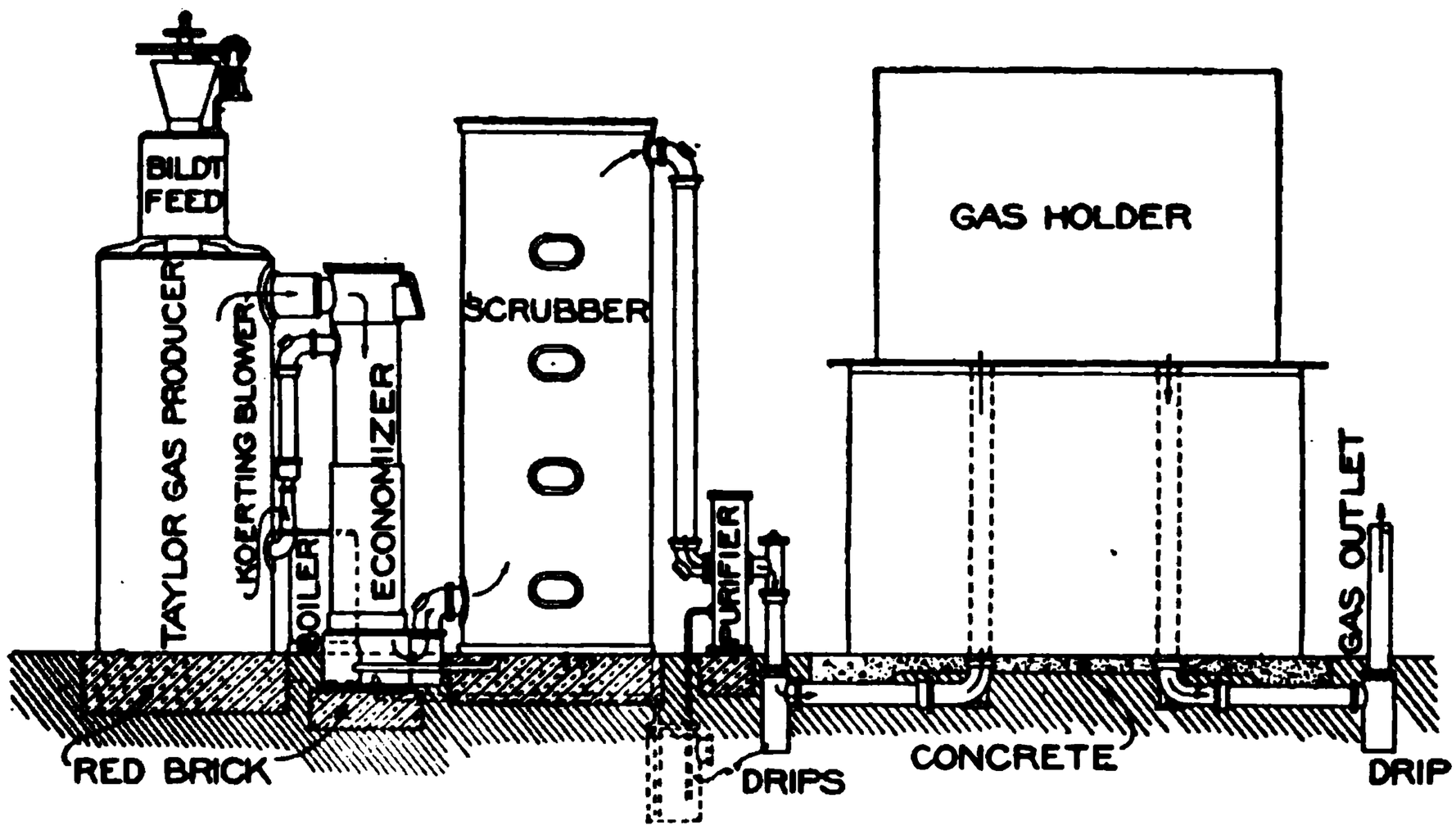

Fig. 78. Producer Plant, Pressure Type.

the vapor from which mixes with the air, or (3) to both. The gas then passes to the *scrubber*, where it meets a spray of cold water, which further cools it and takes from it dust and solid impurities, after which it goes to the *purifier* for the extraction by chemical process of certain undesirable components and for the completion of the removal of solids, or to a *dry scrubber*, and thence to the *gas-holder*. If anthracite coal or coke is used, very little chemical purification is necessary; if bituminous coal is being burned, the cleaning is somewhat more complicated, as the tar and other troublesome substances in the gas have to be extracted before it can be used.

With a pressure producer, it is very necessary that the producer and all the auxiliary apparatus between it and the engine should be gas-tight. A leakage of gas is objectionable, not only on account of the decrease of economy, but also because the gas is poisonous and

Purchase full membership to immediately unlock this page

DELVE INTO FANTASY, MAGIC, MYTHOLOGY & FOLKLORE

Forgotten Books' Full Membership gives access to 797,885 ancient and modern, fiction and non-fiction books.

Continue

*Fair usage policy applies

vaporizer (not shown in Fig. 79); and the steam formed there is conducted to the under side of the grate of the producer, and is sucked through with the air.

Gas-tightness of a suction producer must be looked to carefully;

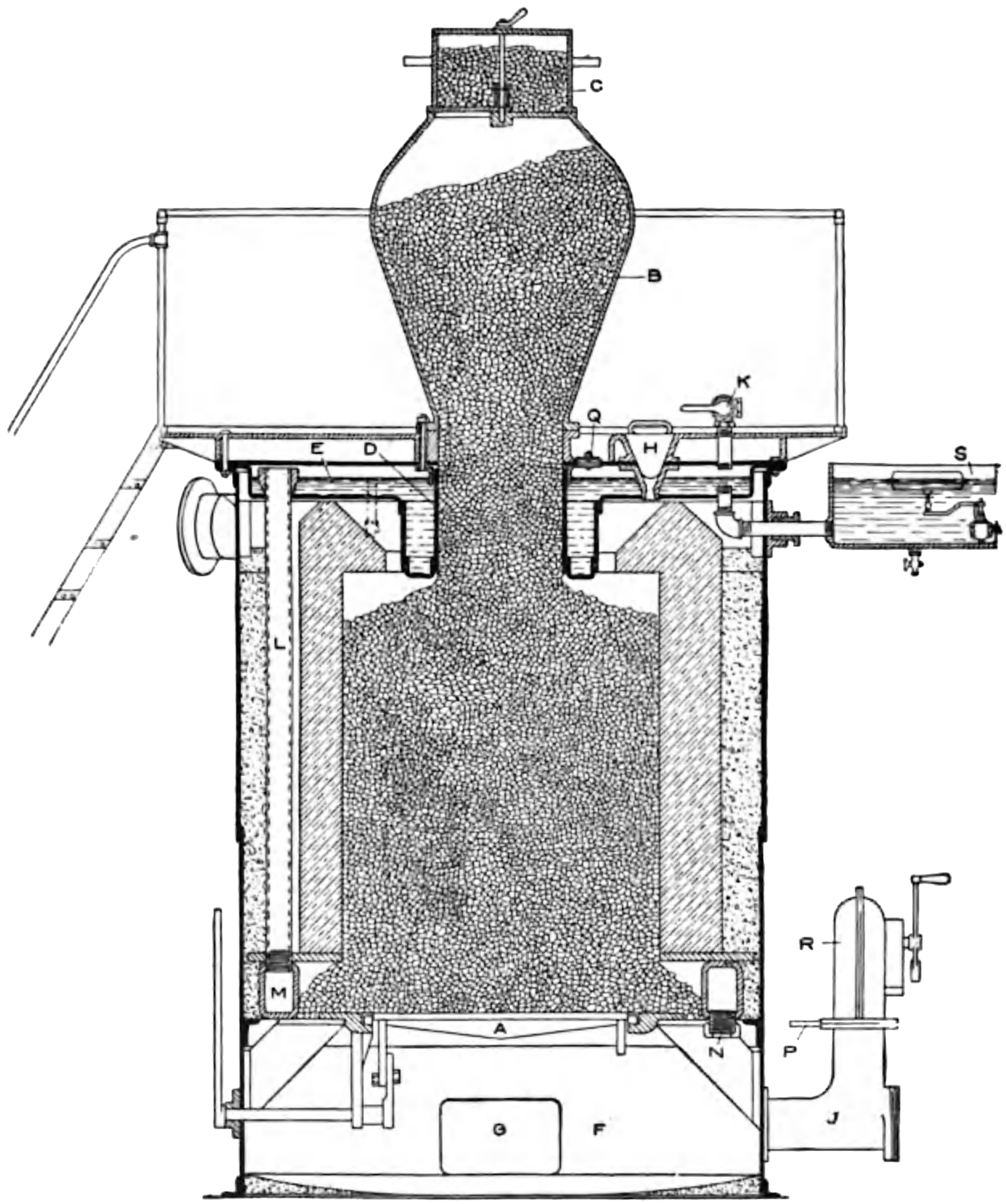

Fig. 80. Section of American Crossley Suction Gas-Producer.

otherwise air will enter, and will burn there or even cause an explosion if in sufficient amount. It is particularly necessary that fresh coal should be charged without admitting air at the same time, since the admission of air, by burning up the gas, would cause the engine

to slow down or stop when the burned gas reaches it. With both forms of producer, the charging hopper is provided with two doors so that coal may be fed without leakage of gas or admission of air; with the suction producer, it is usual to have a fuel magazine (*B*, Fig. 80), which aids also in making the producer air-tight.

Owing to the resistance offered by the fuel, scrubber, and other parts of the plant to the passage of the gas, its pressure on reaching the engine is considerably below the atmospheric pressure. This causes a decrease in the weight of the charge taken to the engine, and makes the power of the engine less than when pressure gas is used. In order to get the high compression which is necessary to ensure ignition with a weak gas supplied at a low pressure, the clearance in the engine using suction gas is smaller than in other engines using the same cycle. It is not safe to use such an engine with illuminating gas, as the pressures resulting from explosion would be excessive. When in some cases illuminating gas is used to start the engine, a special device is used to exhaust some of the charge during the compression period, and thereby to reduce the compression pressure.

If bituminous coal is used in a gas-producer, heavy condensible vapors are distilled off. These, unless they are decomposed and converted thereby into permanent gases, will condense in the form of tar as soon as they arrive at a cool place. The hydrocarbons have great heating value; and if they are not utilized in the producer, the efficiency of the plant is lowered. They are, however, a source of considerable trouble and annoyance. The tar must be separated from the scrubber water before this water can be permitted to go into a sewer; and if the condensation and separation of the tar are not complete, it will cause trouble in the engine by depositing on the valves.

Many gas-producers are designed for dealing with bituminous coal in such way as to decompose and partly burn the hydrocarbon vapors and convert them into permanent gases. This can be accomplished either by a *down-draft* or by an *under-feed* producer. An example of the former is shown in Fig. 80A. The producer is kept full of coal at all times by means of the doors on top. The deep bed of coal is supported by a series of interlocking fire-brick arches. At the top of the generator, located centrally therein, is the

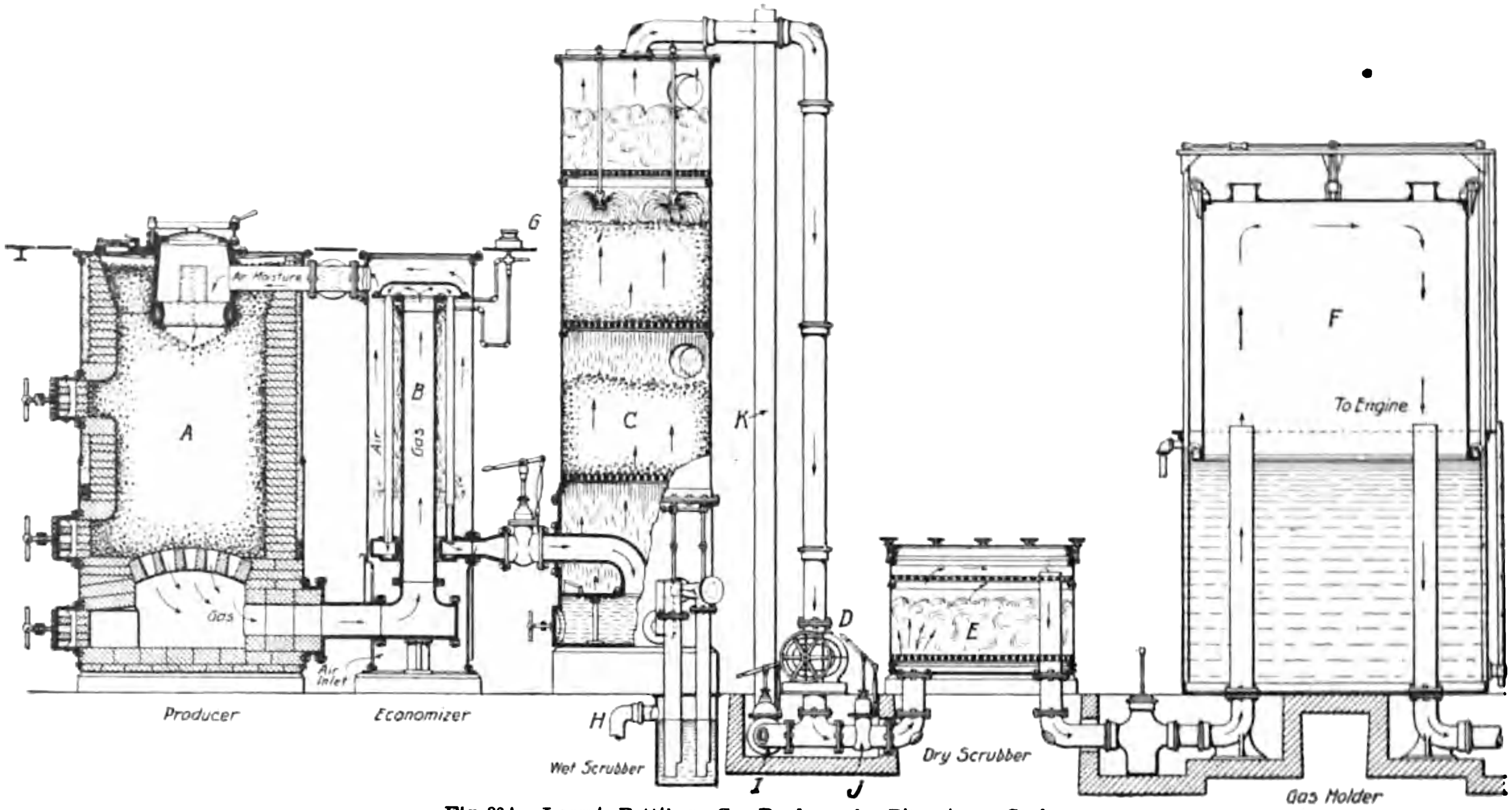

Fig. 80A. Loomis-Pettibone Gas-Producer for Bituminous Coal.

Purchase full membership to immediately unlock this page

HISTORY

Tens of thousands of important historical sources, many previously unobtainable, are now available for the first time with a Forgotten Books Full Membership.

Unlimited Access
$8.99/month

Continue

*Fair usage policy applies

conical holes (with covers), for hand-poking of the fire from above for the purpose of leveling the fire or breaking up clinkers.

With most American coals, the ash fuses and forms clinkers; and these, unless care is taken, become of large size and are difficult to remove from a producer. To prevent the formation of large clinkers, it is necessary to keep the temperature low in the producer; it is also necessary to keep the temperature low to obtain high efficiency. If

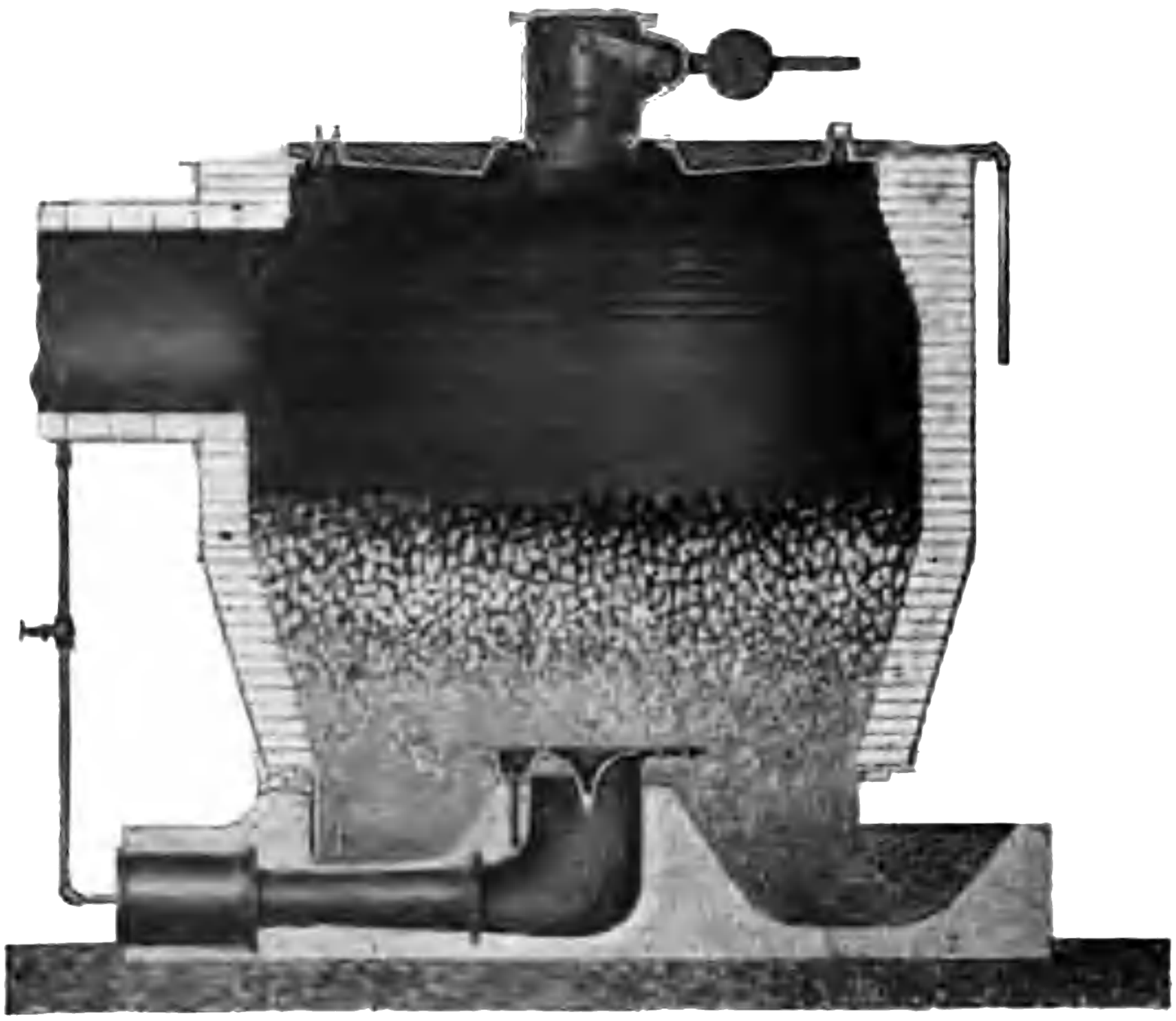

Fig. 81. Sectional View of Hughes Continuous Gas-Producer, Hand-Poked. Diameter inside brick lining, 10 feet.

air alone goes through the bed of coal, it will not be possible to keep the temperature low when the producer is running at its normal load; and consequently there will be trouble with clinkers. The water vapor which is sent in with the air is generally necessary to prevent the formation of clinkers; it tends also to break them up when formed. If too much water vapor goes in with the air, the gas will be so rich in hydrogen as to cause premature ignition at the engine. If too little water vapor is introduced, the fire becomes too hot, and clinkers form. With most producer plants, the amount of water vapor tends automatically to adjust itself, since, if the producer gases become hotter, they vaporize more water, which in turn tends to re-

duce the temperatures in the producer. The correct adjustment of the vapor supply to the producer is one of the most difficult matters in producer operation.

It is possible to keep the temperature down in the producer without the use of water vapor, by sending through the bed of coal, together with the air, some of the exhaust gases from the engine. These gases are chemically inert; and as they absorb some heat, they tend to keep the temperature down. The gas from such a producer will have practically no hydrogen; and consequently a higher compression can be used in the engine without danger of pre-ignition. The resulting increase in the efficiency of the engine, it is claimed, counterbalances the lowered efficiency of the producer. There is, however, more trouble with clinkers than when water vapor is sent through with the air.

The gas, on its way from the producer to the engine, usually passes through two *scrubbers*. The first or *wet scrubber* (Fig. 80A) is a cylindrical vessel with wooden trays. The two lower trays are charged with coke or other material offering a large distributing surface for the cooling water. The cooling water is sprayed over the top layer of coke, and meets and washes the gas, which enters through a water seal at the bottom. The gas, after washing, goes through the top tray, which is charged with excelsior for the purpose of taking from the gas the particles of water which are being carried over by it. The scrubber water escapes at the bottom through an overflow pipe into a water seal.

In the pressure plant shown in Fig. 80A, the producer is actually under a vacuum, although gas is sent to the holder and the engine under pressure. This is accomplished by putting an *exhauster D* between the wet and dry scrubbers. The exhauster is a small blower driven by some outside source of power, sucking gas from the producer and forcing it into the holder. The gate valves *I* and *J* on the discharge side of the exhauster are provided so that the discharge may go to the purge stack *K* while the producer is being started up and the gas is too poor to use in the engine; and then, when good gas is being produced, by closing *I* and opening the other valve *J*, the gas may be sent through the dry scrubber *E* to the holder *F*.

The *dry scrubber* contains one or more trays covered with excelsior or sawdust, its function being to take water out of the gases.

The cleaning of the gases is most important. With many coals, so much fine dust goes off with the gas that the pipes leading to the scrubbers become choked up after a few months. There must be provision for their easy cleaning. In a suction producer where there is no holder, if the gas is imperfectly cleaned in the scrubbers, it may take enough dust to the engine to give trouble there after a while, either by getting on the valve-seats and preventing their complete closing, or by accumulating in the cylinder and causing pre-ignition.

An efficient producer of either the pressure or the suction type will waste not more than fifteen to twenty per cent of the heat of combustion of the coal, in converting it into gas; that is, the gas, on burning, will give up eighty to eighty-five per cent of the heat of combustion of the coal. Its efficiency exceeds that of a steam boiler. If the gas produced is a weak one, it is produced in greater volume, and it has to be mixed with a much smaller volume of air.

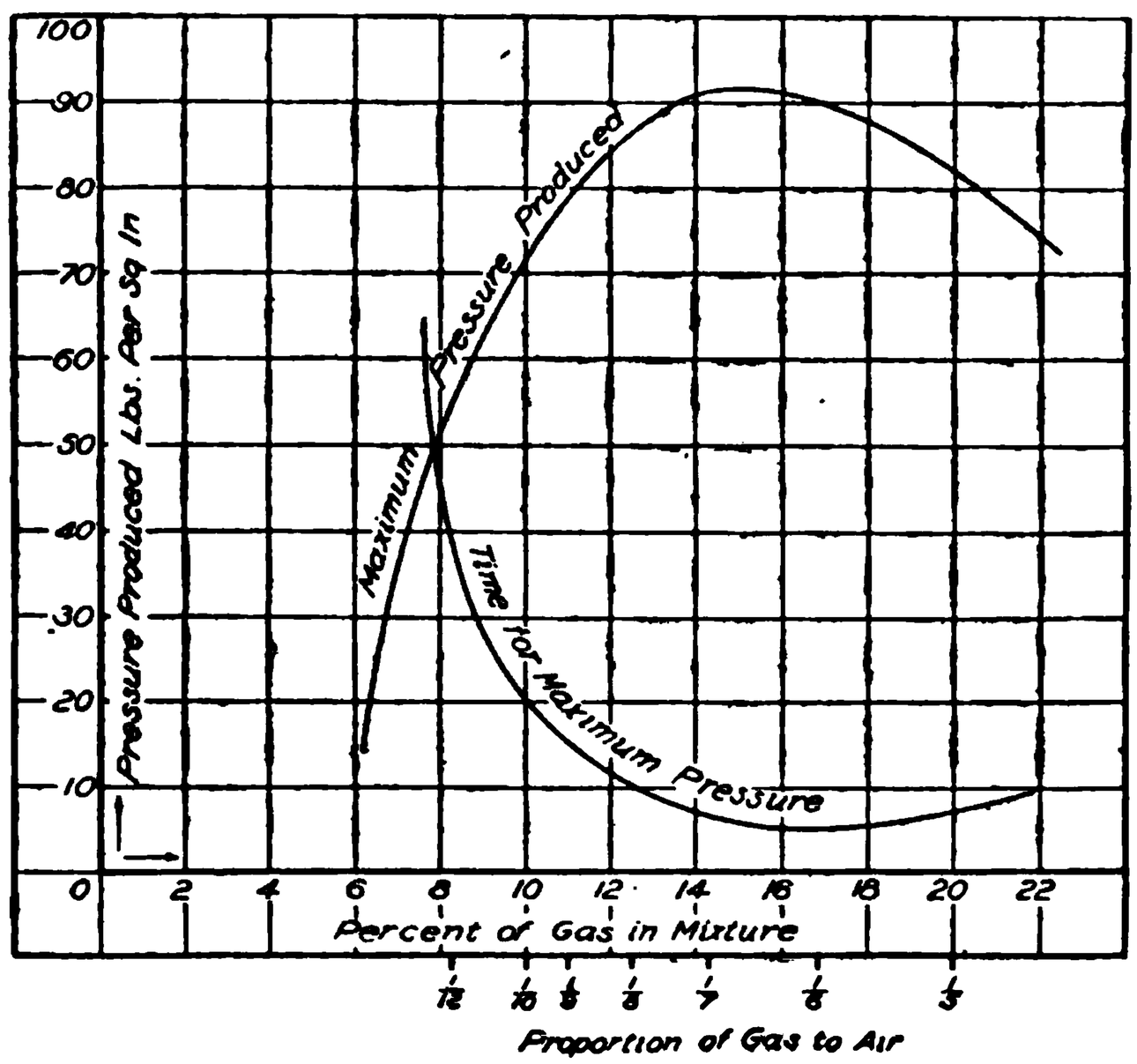

Fig. 82. Pressure Curves from Explosion of Uncompressed Coal-Gas Mixtures.

Explosibility. An important characteristic of a fuel is its *explosibility* with an excess or deficiency of air. It is not possible or desirable to regulate the air-supply to an engine so that there shall always be present exactly the amount chemically necessary. Other things being equal, that fuel is best which will permit the largest variation of the ratio of air to fuel without failure to ignite. Coal gas, which unites with 5 to 7 seven times its own volume of air, will ignite (at atmospheric pressure) with any amount of air between 4.2 and 1,15 times its

Purchase full membership to immediately unlock this page

DELVE INTO FANTASY, MAGIC, MYTHOLOGY & FOLKLORE

Forgotten Books' Full Membership gives access to 797,885 ancient and modern, fiction and non-fiction books.

Continue

*Fair usage policy applies

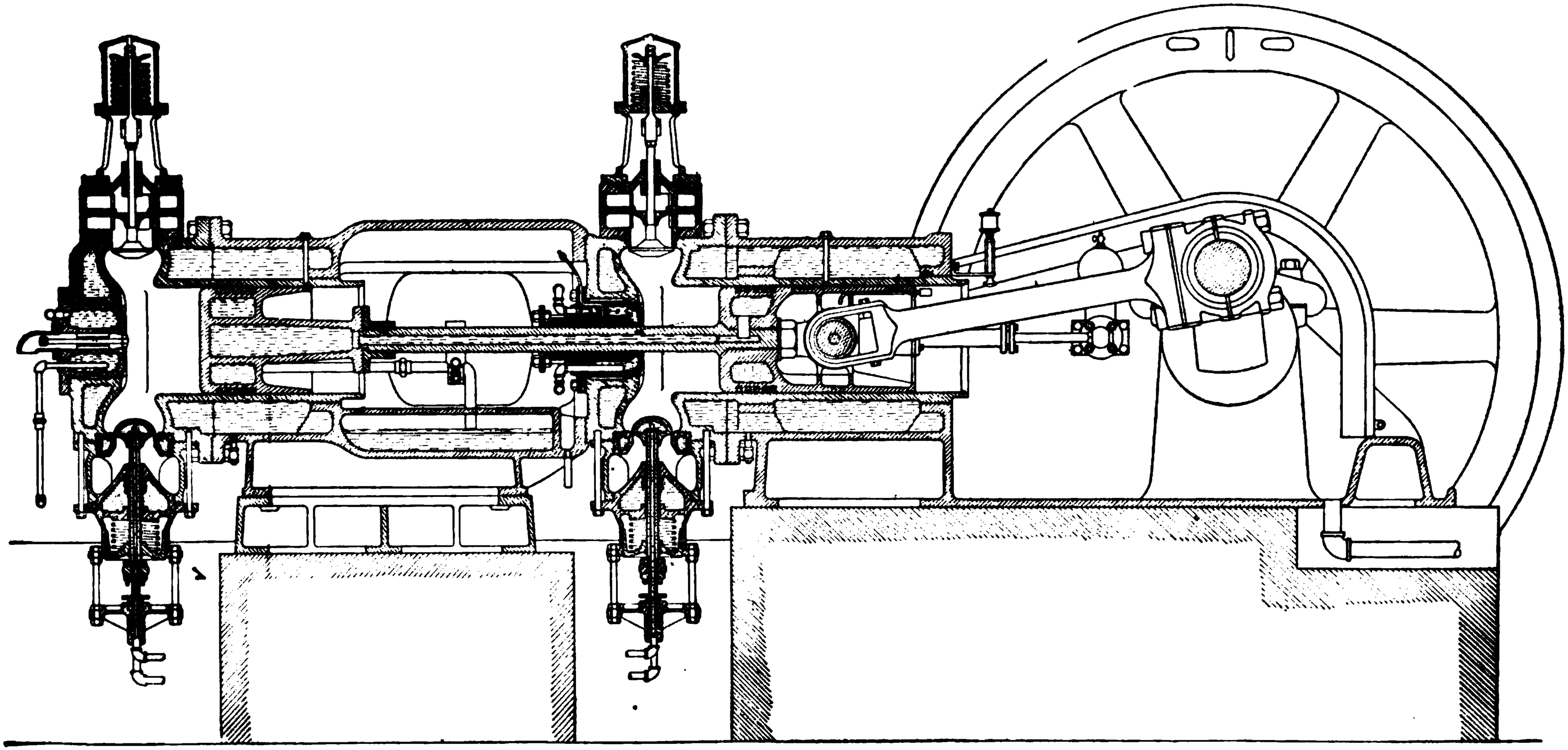

Fig. 83. Longitudinal Section of Warren Heavy-Duty Tandem Gas Engine.
Struthers-Wells Company, Warren, Pa.

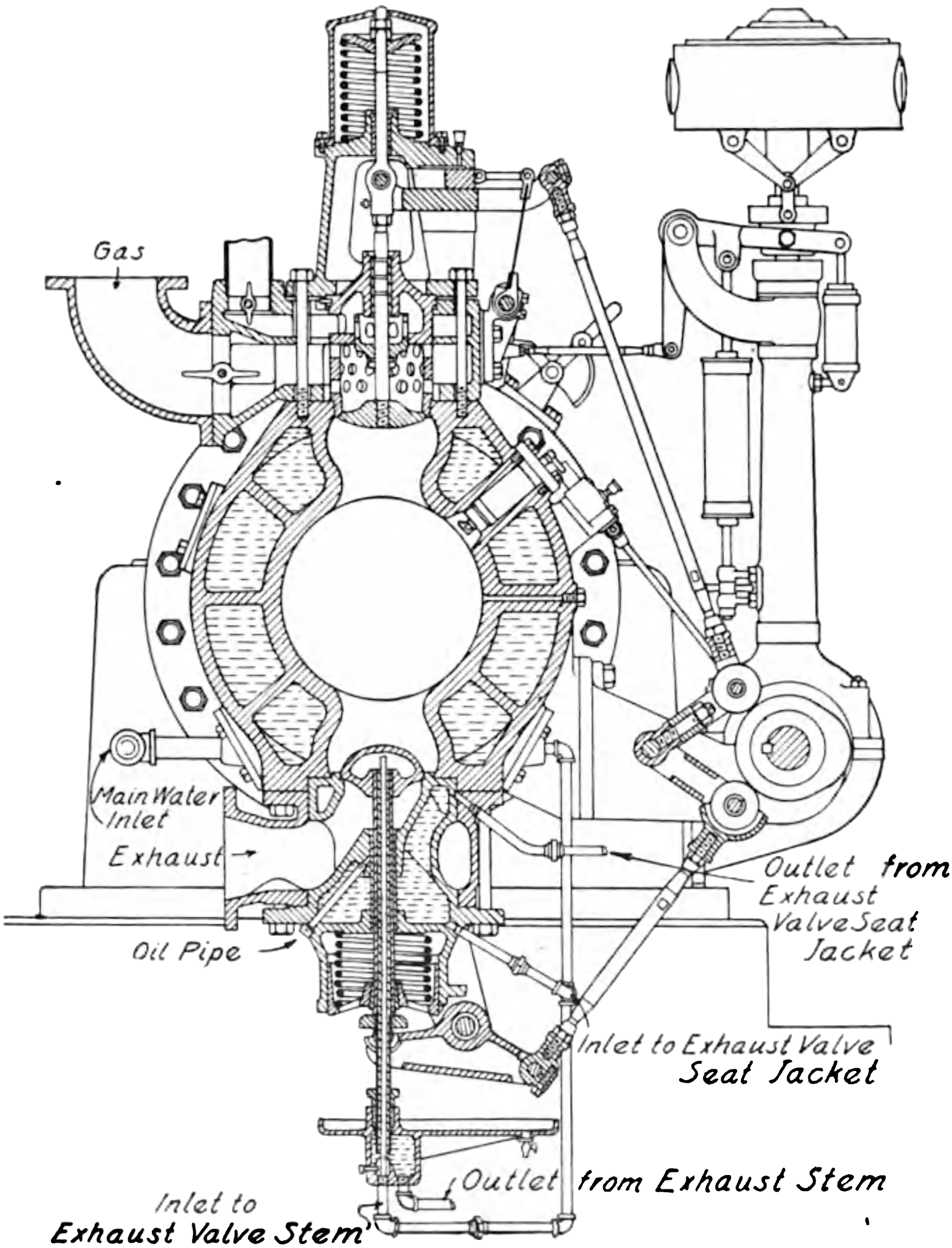

Fig. 84. Vertical Cross-Section through Valves of Warren Tandem Gas Engine. Shown in Longitudinal Section in Fig. 83.

oven gas. Gases rich in hydrogen are objectionable on account of the excessive stresses caused by pre-ignition in a large cylinder.

The American practice is to make large gas engines of the *side-crank* type. With the four-cycle type of 1,000 to 1,500 horse-power, a tandem, double-acting engine is usual; for 2,000 horse-power and over, double-tandem, double-acting engines are used. The tandem, double-acting engine gives two explosions per revolution, resulting in a very uniform speed of rotation. If two-cycle engines are used, they are always double-acting engines, and consequently give two explosions per revolution in a single-cylinder engine, and four explosions per revolution in a two-cylinder engine.

An example of a moderate-sized tandem, single-acting engine is given in longitudinal section in Fig. 83, and in cross-section through the valves in Fig. 84. This arrangement requires a stuffing-box in the front cylinder. The piston and piston-rod, the exhaust valves, and the exhaust-valve cages are water-jacketed. The water enters the front piston through a pipe sliding through a stuffing-box; goes through the hollow piston-rod to the rear piston; and from there discharges through a pipe into a trough in the intermediate bed. The jackets are cast separate from the cylinders, and make sliding joints at their front ends so as to allow of differential expansion of the cylinders and jackets. The jacketing of the exhaust valves is shown clearly in Fig. 84.

The valves are situated vertically above one another, the exhaust as usual being below. They are worked by a single cam on the lay shaft, through intermediate push-rods and levers—the exhaust valve, through a massive lever with a fixed fulcrum; and the admission valve, through a lever with a movable fulcrum. The position of the movable fulcrum is controlled by the governor through a flexible steel strip; the further in it is pushed, the less does the admission valve open, and consequently the more is the charge throttled. The movable fulcrum is quite free to move at all times except when the admission valve is actually being operated. The governor is free to move even at that time, as it can bend the flexible strip; consequently the work on the governor is extremely slight, and it can be made very sensitive. These engines have converted 32 per cent of the total heat of the gas supplied to them into useful work.

Purchase full membership to immediately unlock this page

HISTORY

Tens of thousands of important historical sources, many previously unobtainable, are now available for the first time with a Forgotten Books Full Membership.

Unlimited Access
$8.99/month

Continue

*Fair usage policy applies

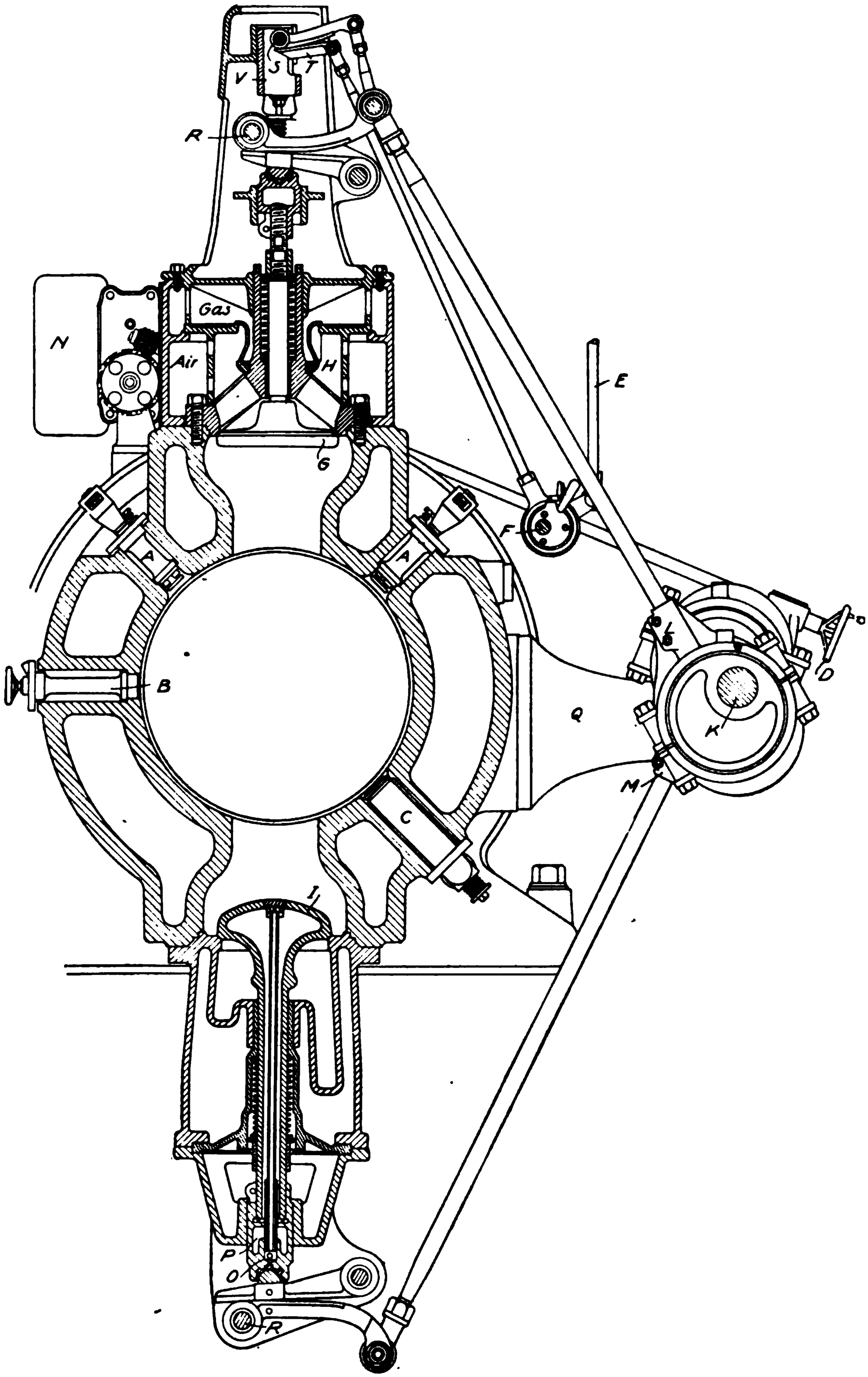

Fig. 86. Vertical Cross-Section through Valves of Allis-Chalmers Tandem Double-Acting Gas Engine Shown in Longitudinal Section in Fig. 85.

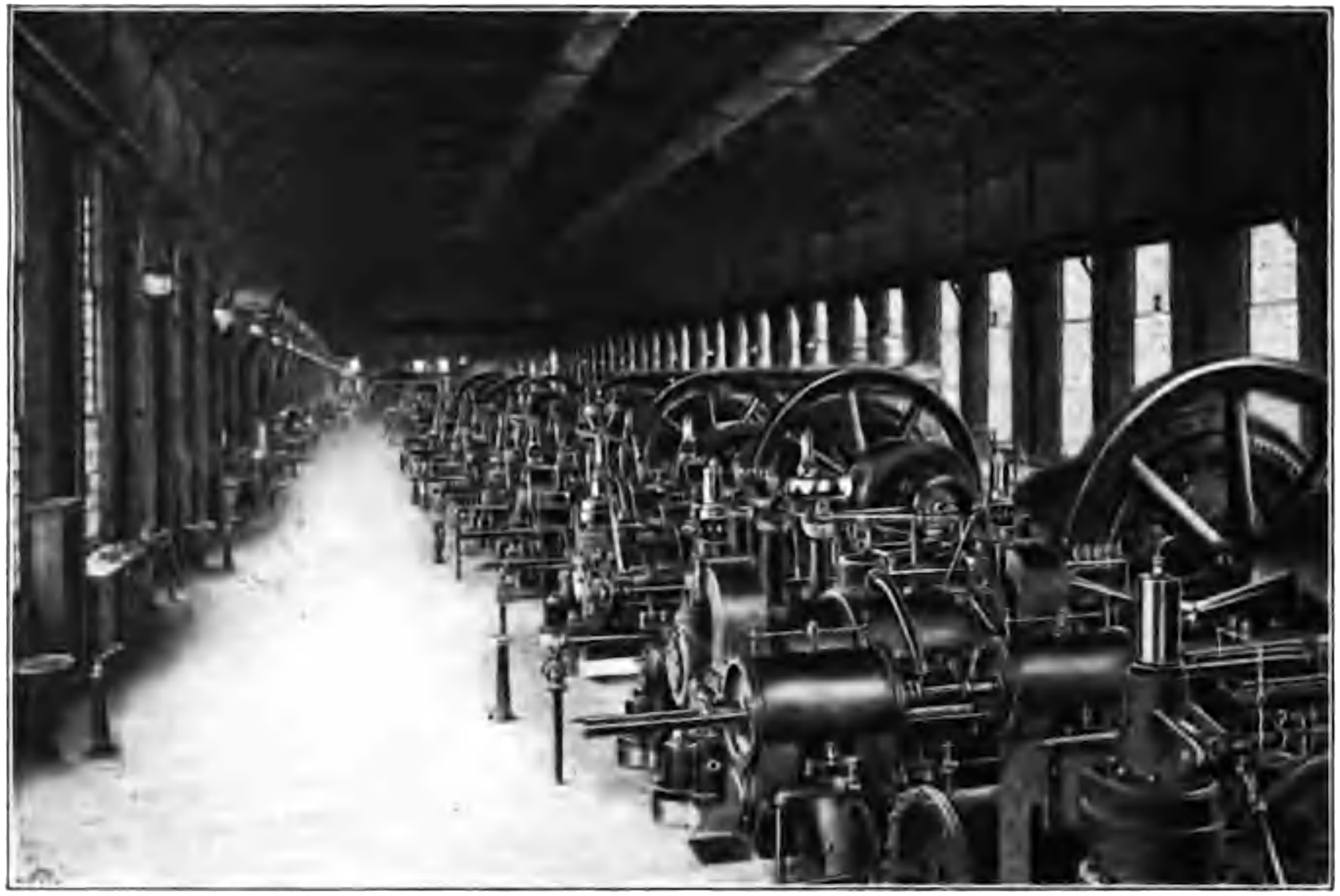

EIGHT 1,000 H. P. TWO-CYCLE GAS ENGINES, DRIVING ELECTRIC GENERATORS IN THE 40,000-H. P. PLANT OF THE LACKAWANNA STEEL CO.
Ferro Machine & Foundry Co., Cleveland, Ohio.

Purchase full membership to immediately unlock this page

DELVE INTO FANTASY, MAGIC, MYTHOLOGY & FOLKLORE

Forgotten Books' Full Membership gives access to 797,885 ancient and modern, fiction and non-fiction books.

Continue

*Fair usage policy applies

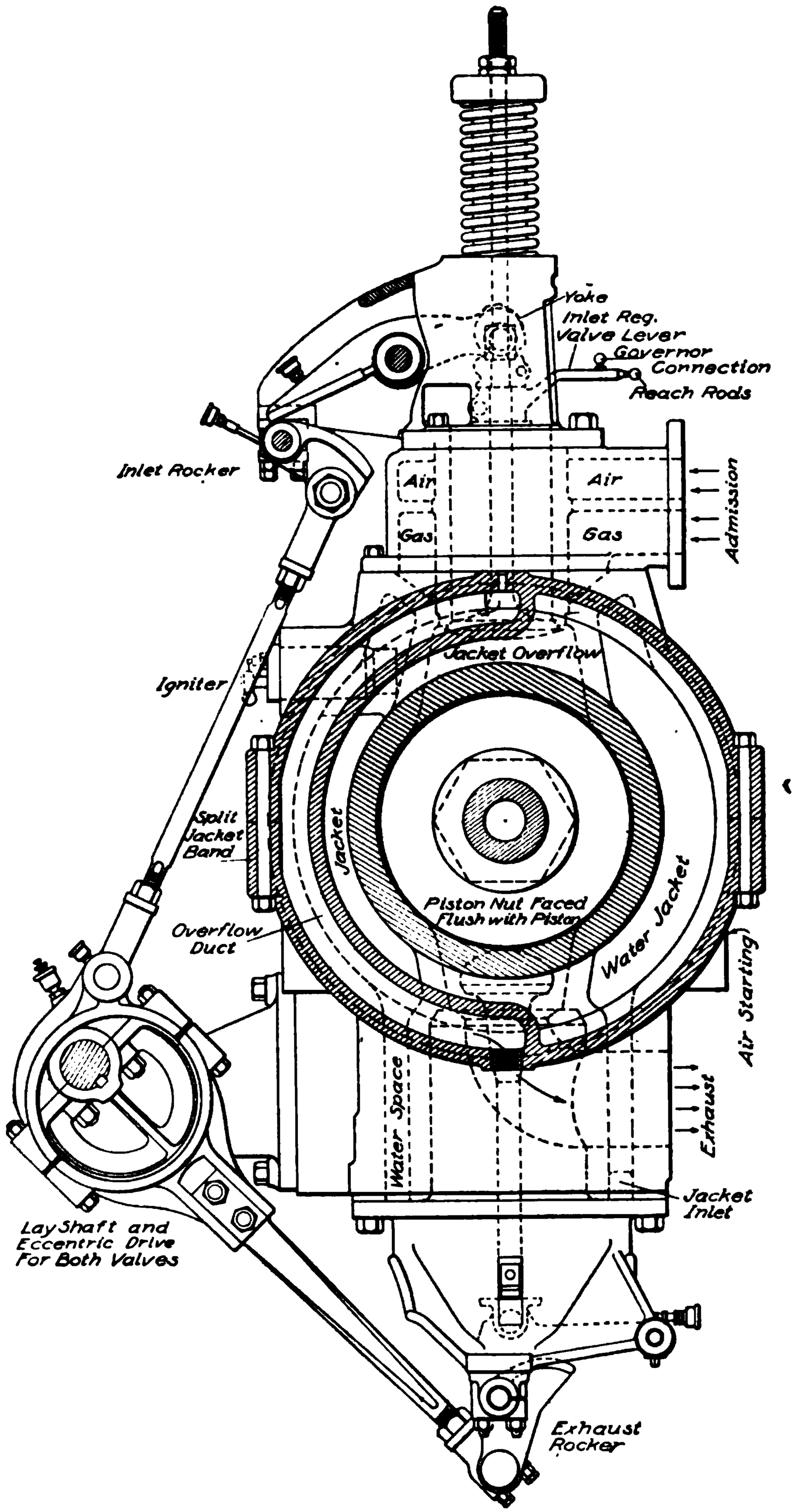

Fig. 87. Vertical Cross-Section of Westinghouse Tandem Gas Engine.

The position of the fulcrum lever T is controlled by the governor through the rod E and the eccentric on the shaft F; consequently the governor controls the movement of the rolling lever fulcrumed at S, and of the gas valve H.

Two independent igniter plugs A A are used at each end of the cylinder, and the ignition is of the electromagnetic make-and-break type. Starting is by compressed air.

The valve gear and governing of another type of large gas engine are illustrated in Fig. 87. One eccentric is employed for both the exhaust and the inlet valve. There is a single mechanism which combines the functions of inlet, mixing, and governing valves. The mechanism consists of a spring-operated poppet valve, a stationary cage in which it is housed, and a mixing or regulating valve sleeve that reciprocates within the cage and rotates on the inlet-valve stem. The regulating sleeve is provided with ports registering with corresponding ports in the surrounding valve cage. The valve has three distinct motions, a definite vertical motion of the poppet valve, the vertical motion of the sleeve, and a rotation of the sleeve controlled by the governor alone.

The main poppet valve is worked from the eccentric through a push-rod and rolling levers. When it is closed, the cylindrical sleeve closes the air and gas ports. As the main valve opens, the sleeve falls, uncovering the ports. The area of the ports uncovered is determined by the angular position of the sleeve. The rotating sleeve acts as a throttling valve, but does not affect the relative amounts of air and gas admitted. The governing is by quantity, not by quality.

The cylinders of the largest engines of this type are cast in halves fitted together with ground joints. An opening is left between the two halves of the jacket at the center; this opening is closed by a split jacket band (Fig. 88) making water-tight joints with the castings, but permitting independent expansion of the cylinder and the jacket.

Large Two-Cycle Engines. The double-acting two-cycle engine has separate air and gas pumps B and A, Fig. 89, to give the charge the pre-compression necessary to get it into the cylinder. The movement of the piston uncovers the exhaust ports in the middle of the cylinder, when it is about 12 per cent of its travel from the end of its stroke. The exhaust gases, which are then usually at 30 to 40 pounds pressure, escape rapidly. Meanwhile the air and gas pumps, which are driven

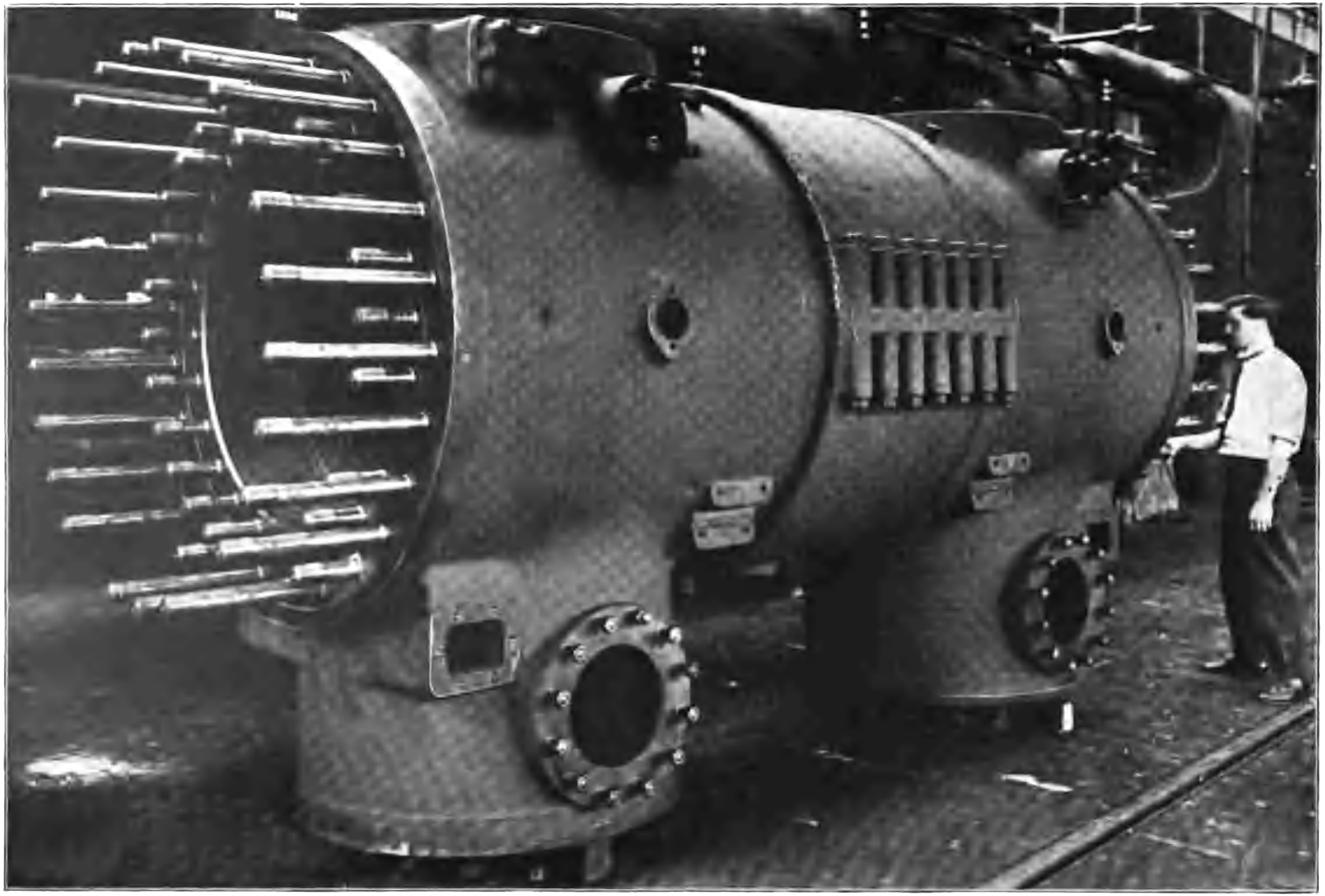

Fig. 88. Cylinder of Large Gas Engine.
Westinghouse Electric & Manufacturing Company, Pittsburg, Pa.

Purchase full membership to immediately unlock this page

HISTORY

Tens of thousands of important historical sources, many previously unobtainable, are now available for the first time with a Forgotten Books Full Membership.

Unlimited Access
$8.99/month

Continue

*Fair usage policy applies

in a short time, it is best to start it simultaneously at two or more points. In small engines this is not necessary, as the distance the flame has to go in order to fill the combustion space is small. The

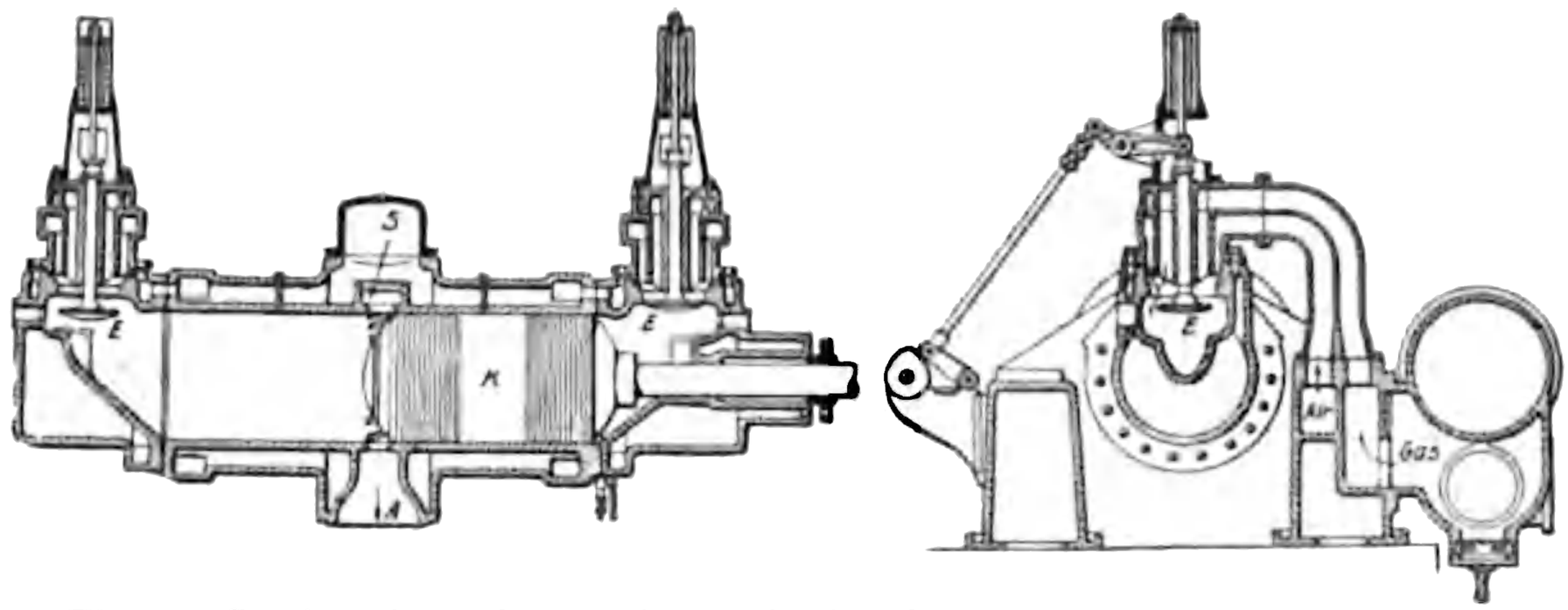

Fig. 90. Section through Cylinder (at left) and through Inlet Valve (at right) of Koerting Gas Engine.

effect of using two igniters is shown in Fig. 91, which gives two superposed indicator cards taken from a large engine. The dotted-line card was taken with one igniter in use; the full-line card, with two igniters. With two igniters, the combustion is seen to occur more rapidly than with one, giving a maximum pressure of 335 pounds, as against 272 pounds with one igniter. The difference between the areas of the cards is about 4 per cent.

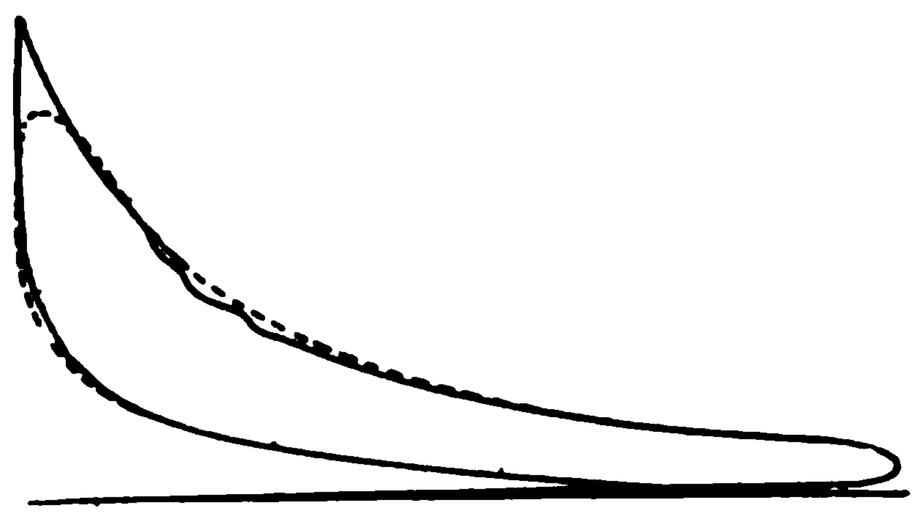

Fig. 91. Cards Showing Effect of Using Two Igniters.

Most of the large gas engines in use at the present day are running on blast-furnace gas. The success and security of operation of these engines depend more on the effective cleaning of the gas than on any other single factor. The cleaning is generally carried out by passing the gas through a series of large *cooling towers* provided with a number of shelves, in which it meets sprays of water; and then taking the gas to a centrifugal fan, which also is supplied with water. The gas and water are thrown against the casing of the fan, and the dust is more or less completely retained by the water.

The most effective of these gas cleaners is shown in Fig. 92. The cylindrical drum *E E* is rotated at a speed of about 850 revolutions per minute; it carries on its periphery an oblique vane forming

a continuous spiral curve. This vane, together with the casing which it almost touches, makes a spiral channel through which the gas must pass on its way through the cleaner. The front part of the drum, throwing the gas outward by centrifugal force, acts as a suction fan drawing the gas through the apparatus. Cleaning water enters through tangential openings *B* in the side of the casing, flows through

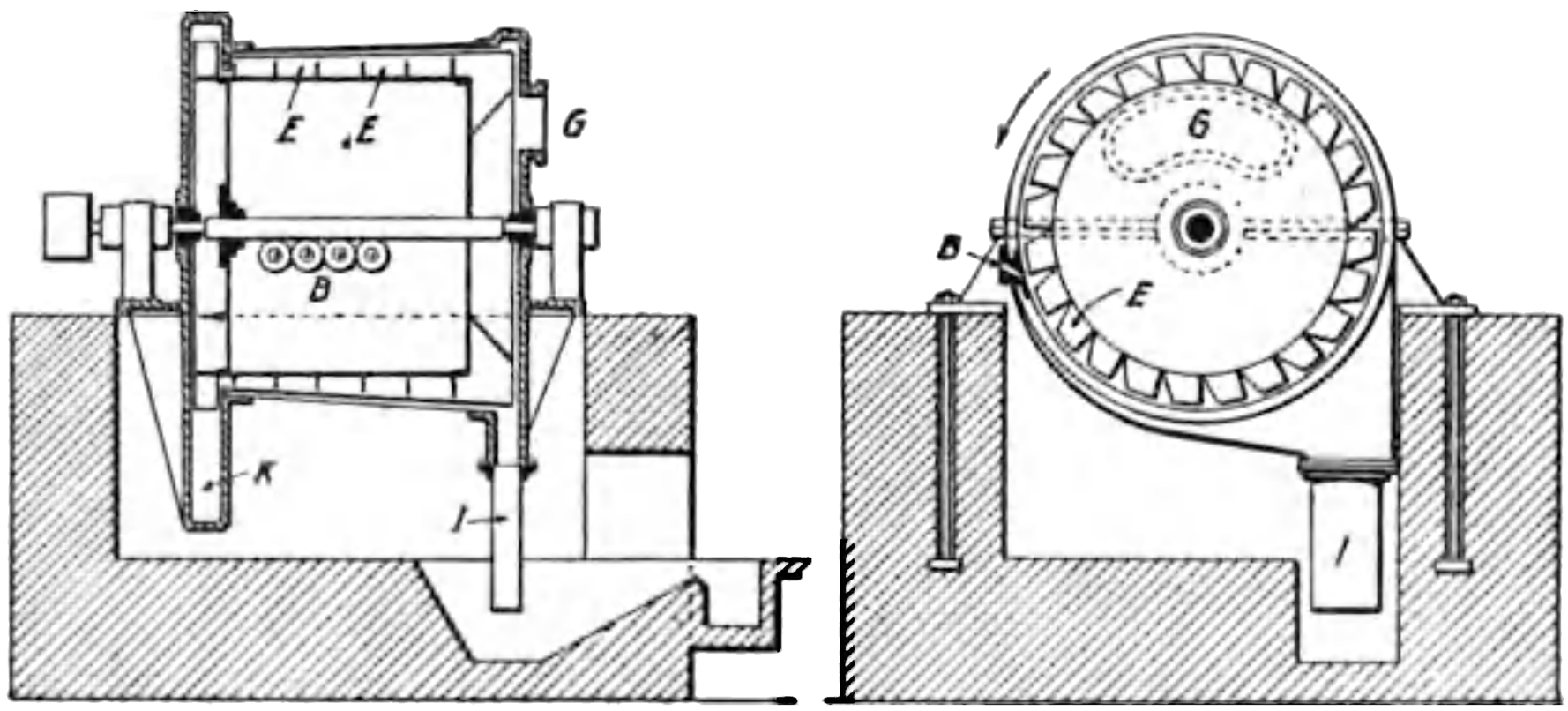

Fig. 92. Sectional Views of Theisen Gas-Cleaner.

the cleaner in the opposite direction to the gas, and escapes at *I*. The casing is covered on the inside with wire netting, which retains the water. The gas preferably goes to the cleaner when still hot, as this vaporizes some of the water, and moistens the dust particles, making them heavier.

Fuel Consumption. The consumption of fuel in a gas engine running at its rated load when natural gas is used, is from 12 to 15 cubic feet per brake horse-power per hour; with coal gas, 14 to 18 cubic feet per brake horse-power per hour; and with producer gas, about 1¼ pounds of coal per brake horse-power per hour. These are average good results; large engines show higher economy than smaller engines, and have given a brake horse-power with a consumption of 1 pound of coal per hour.

LIQUID FUELS

Internal-combustion motors can be made to work with any explosive mixture. Mixtures of air with gaseous fuels are naturally the mixtures most easily made and controlled. Mixtures of air with liquid fuels offer generally no particular difficulty. Mixtures of air with solid fuels (such as powdered coal) have been tried,

but are not practicable, on account of the ash which remains in the cylinder and rapidly abrades it.

The liquid fuels which are commercially available are *crude petroleum and its distillates*, and *alcohol*.

Crude petroleum occurs at many parts of the earth's surface, the principal sources being the Pennsylvania and Ohio fields, and the Baku district in the Caucasus. In the United States the principal fields are in Pennsylvania, Ohio, Texas, and California. The oils from these different fields are very different in their characteristics. They consist almost entirely of compounds of hydrogen and carbon—the so-called *hydrocarbons*. The crude oils are made up principally of closely related compounds, some of which, on separation, are gaseous, others liquid, and still others solid at ordinary temperatures. The liquid constituents are of different densities and volatilities, varying from an extremely light liquid which evaporates rapidly at atmospheric temperature (just as alcohol and ether do), to heavy, viscous liquids which have to be raised to a high temperature before they will give off vapors. The character of the crude oil depends on the relative amounts of these various constituents. The Pennsylvania, Ohio, and Baku oils contain a considerable proportion of the lighter liquid constituents. The Texas and California oils contain very little of the lighter constituents; they consist mainly of a different series of hydrocarbons, having close chemical relations with asphaltum.

The crude oils from Pennsylvania and Ohio can be used in oil engines. The Texas and California crude oils can also be used, but only with difficulty and in engines specially designed for such oils. The crude oil, because it is a mixture of substances of very divergent physical properties, is not a satisfactory fuel; those engine conditions which are favorable for burning one part of the oil are not necessarily favorable for the other constituents.

The Pennsylvania and Ohio crude oils are commonly refined before using. The refining is a process of distillation carried on in closed retorts. If crude petroleum is slowly heated, it gives off as vapor its various constituent elements, the more volatile being given off at the lower temperatures, and the residue becoming continuously more dense and more viscous. In the refining of petroleum, the vapors given off at various temperatures are condensed and collected

Purchase full membership to immediately unlock this page

DELVE INTO FANTASY, MAGIC, MYTHOLOGY & FOLKLORE

Forgotten Books' Full Membership gives access to 797,885 ancient and modern, fiction and non-fiction books.

Continue

*Fair usage policy applies

The density of a liquid is the weight of unit-volume of that liquid at 60° F., as compared with the weight of the same volume of water at 60° F. All the liquid fuels are lighter than water. It is the common practice to speak of the density of petroleum products in degrees Baumé. This is an arbitrary scale with nothing to recommend it. Its relation to true density, for liquids lighter than water, is given in the following table:

Baumé Degrees	Density Compared with Water	Baumé Degrees	Density Compared with Water
64 degrees	.724	72 degrees	.692
65 "	.720	73 "	.689
66 "	.717	74 "	.685
67 "	.713	75 "	.682
68 "	.709	76 "	.679
69 "	.706	77 "	.675
70 "	.702	78 "	.672
71 "	.699	79 "	.669

The density of gasoline varies from .67 to .71; of kerosene, from .75 to .82; of fuel oil, from .82 to .85.

The higher the density, the less the degrees Baumé. The heats of combustion of the various crude oils and their distillates do not vary greatly; they range from 18,000 to 20,000 B. T. U. per pound.

Carbureters and Vaporizers. In order to get an explosive mixture of a liquid fuel with air, it is necessary first to convert the liquid fuel into a vapor or gas. The lighter distillates (gasoline, naphtha, etc.) are easily vaporized; the illuminating oils offer some difficulty; the fuel or crude oils are still more difficult.

The cycle of operations through which the engine goes, and the general structure of the engine, may be the same for all these oils as for the gas engines already discussed; the only essential difference is in the addition of devices for supplying the oil to the cylinder, and for its preparatory treatment.

With the lighter oils, the apparatus for vaporizing the oil is called a *carbureter*; with the heavier oils, a *vaporizer*.

The vaporization of gasoline is effected by bringing the current of air that is on its way to the cylinder, over, through, or in some other way into intimate contact with the gasoline. A given volume

of air will take up an amount of gasoline which depends on the composition of the gasoline, the temperature of the air and gasoline, and the humidity of the air. When it has taken up its charge of gasoline vapor, the air is said to be *carbureted*. The lighter (and more volatile) the gasoline, the more of it will be vaporized by a given volume of air; the higher the temperature of the air and gasoline, the more gasoline is evaporated; also, the dryer the air, the greater is its capacity for taking up the gasoline. Gasoline is a mixture of many components; and on the passage of air over a surface of gasoline, the more volatile components vaporize first, leaving a residue which becomes denser and denser and which gives off vapor at a constantly decreasing rate. As it is desired in all engines that all of the gasoline should be used, and that there should be no variation in the composition of the carbureted air, this selective evaporation has to be prevented. The process of vaporization of the gasoline necessitates the supply of the latent heat of vaporization partly from the air, and partly from the body of the fluid. This results in a cooling of the gasoline, which in turn diminishes the rate of vaporization. In cases where the arrangements are such that this cooling of the body of the oil by vaporization is possible, it is necessary to supply heat from outside (either from the exhaust gases or the jacket water), to make up for the loss of heat. With gasoline the necessary amount of heat is small and can be taken from the jacket water.

It is not necessary, however, in all cases to supply heat from outside to the carbureter. There are many devices by which selective evaporation and the cooling of the body of the gasoline can be entirely prevented, but even with such devices it is often desirable to raise the temperature of the gasoline somewhat, so as to increase its volatility.

Air which at ordinary temperatures has passed over or through the ordinary gasoline of commerce and is consequently saturated with the vapor of the gasoline (that is, contains as much gasoline vapor as it is possible for it to carry), is too rich in fuel to be explosive. If the temperatures are low or the gasoline dense, this may not be the case. It is necessary, with such rich mixtures, to add more air to the carbureted air in order to get an explosion in the cylinder, or, at any rate, even if an explosion is possible, in order to get an economical performance of the engine. Such admixture of air with the

carbureted air may take place either at the cylinder or in the carbureter itself.

The carbureters which are generally used in the relatively large and slow-speed stationary engines, are quite different from those which are in practically universal use in small high-speed automobile and motor-boat engines. In the latter case, compactness, simplicity, and the absence of a gasoline pump (an appliance not easy to keep tight) are obtained. The same type of carbureter, however, is not well adapted to the stationary engine, where larger volumes of carbureted air are required at longer intervals, instead of small volumes at short intervals.

Fig. 93. Westinghouse Carbureter.

An example of a carbureter for a stationary engine is shown in Fig. 93. It is a vertical cylinder surrounded by a water jacket. Gasoline is pumped to the top of the cylinder, and, passing through a spraying device, falls in a finely divided state. It meets a current of air entering through inlets at the bottom and drawn upwards by the suction of the engine. The carbureted air goes from the top of the carbureter to the engine, while any unvaporized gasoline drains to the suction side of the gasoline pump, and is returned later to the carbureter. The water jacket has circulating through it some of the heated jacket water from the cylinder. The actual temperature of the jacket is controlled by a thermostat which varies the amount of water circulating.

Gasoline is very fluid, and will atomize completely when injected in small quantities into a pipe through which a current of air is passing. The air in that case carries the gasoline with it, partly in the form of a mist and partly vaporized. This process is largely used in gasoline engines, and is illustrated in Fig. 94, which shows the whole arrangement of a gasoline plant. The gasoline tank is buried below the floor level and outside the building, so as to reduce the danger in case

Purchase full membership to immediately unlock this page

HISTORY

Tens of thousands of important historical sources, many previously unobtainable, are now available for the first time with a Forgotten Books Full Membership.

Unlimited Access
$8.99/month

Continue

*Fair usage policy applies

of fire or explosion, and also so that there can be no leakage of gasoline from the pipes when the engine is not running. The gasoline is taken through a strainer near the bottom of the tank, and through the suction pipe by the action of a gasoline pump, which is worked from the cam-shaft. It is then forced through the control valve *A*, and is sprayed into the air-pipe *N* through the jet *H* whenever the fuel-admission valve *G* opens. A vertical branch of the discharge pipe from the gasoline pump has an overflow connecting with the tank. The pump always delivers more gasoline than is required, the excess being returned to the tank through the overflow pipe. This maintains a constant pressure of the gasoline, depending only on the constant overflow level. With a given opening of the control valve *A*, and a constant head on the gasoline, the amount of gasoline admitted each time remains constant.

Carbureters. The carbureters used for automobiles or motor-boats may be divided into three classes according to the method by which the air and gasoline are brought into contact

1. **Surface Carbureters.** In the surface carbureter, air is made to pass over a gasoline surface, or an extended surface wetted with gasoline. The most common form is a wick or flannel carbureter such as is shown in Fig. 95. The air, entering at *a*, is forced by the sheet-metal spiral *c c* to pursue a spiral path till it gets to the center of the carbureter, when it escapes from *b*. The metal spiral has flannel on its surface, and the whole vessel is half-full of gasoline. The air, passing through the carbureter, comes in contact with an extended gasoline and gasoline-wetted surface, and is thereby saturated with vapors. The objections to this type are: (1) selective evaporation and (2) cooling of the mass by the vaporization.

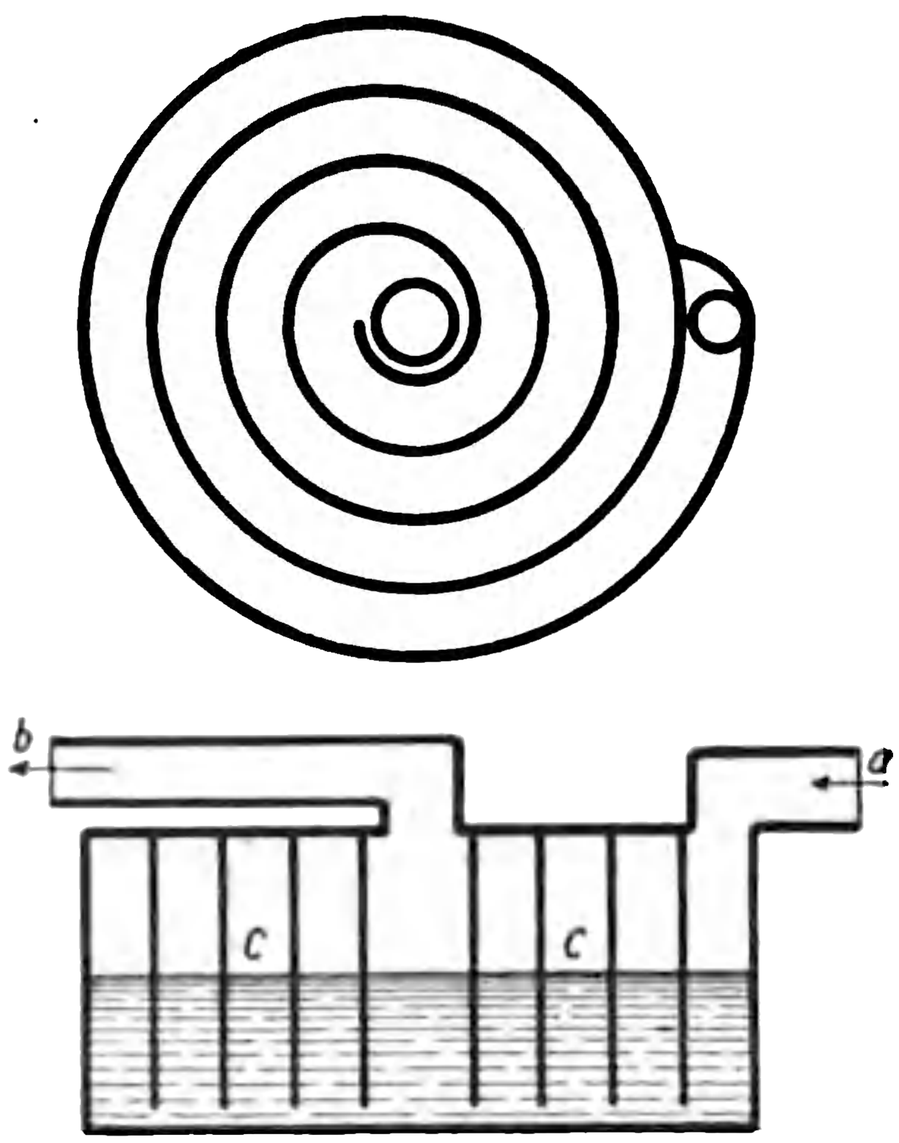

Fig. 95. Surface Carbureter.

2. **Bubbling Carbureters.** In the bubbling carbureter air is made

to pass through a moderate depth of gasoline, and, in bubbling through it, becomes saturated. The same objection holds as with the surface carbureter. Both these types have now become rare, and have been superseded by the third type.

3. **Spray Carbureters.** With spray carbureters the amount of gasoline which is required for carbureting during one admission to the cylinder, is sprayed into the entering air, is thereby partly vaporized and partly atomized, and consequently is carried into the cylinder partly as a vapor, partly as a liquid. In consequence of its separation from the main body of the gasoline, there is no cooling action on the mass of the gasoline by the vaporization, and no alteration in its composition by selective evaporation. If heating of the main body of the gasoline is used, it is in order to increase its volatility, and not to make up for cooling by vaporization.

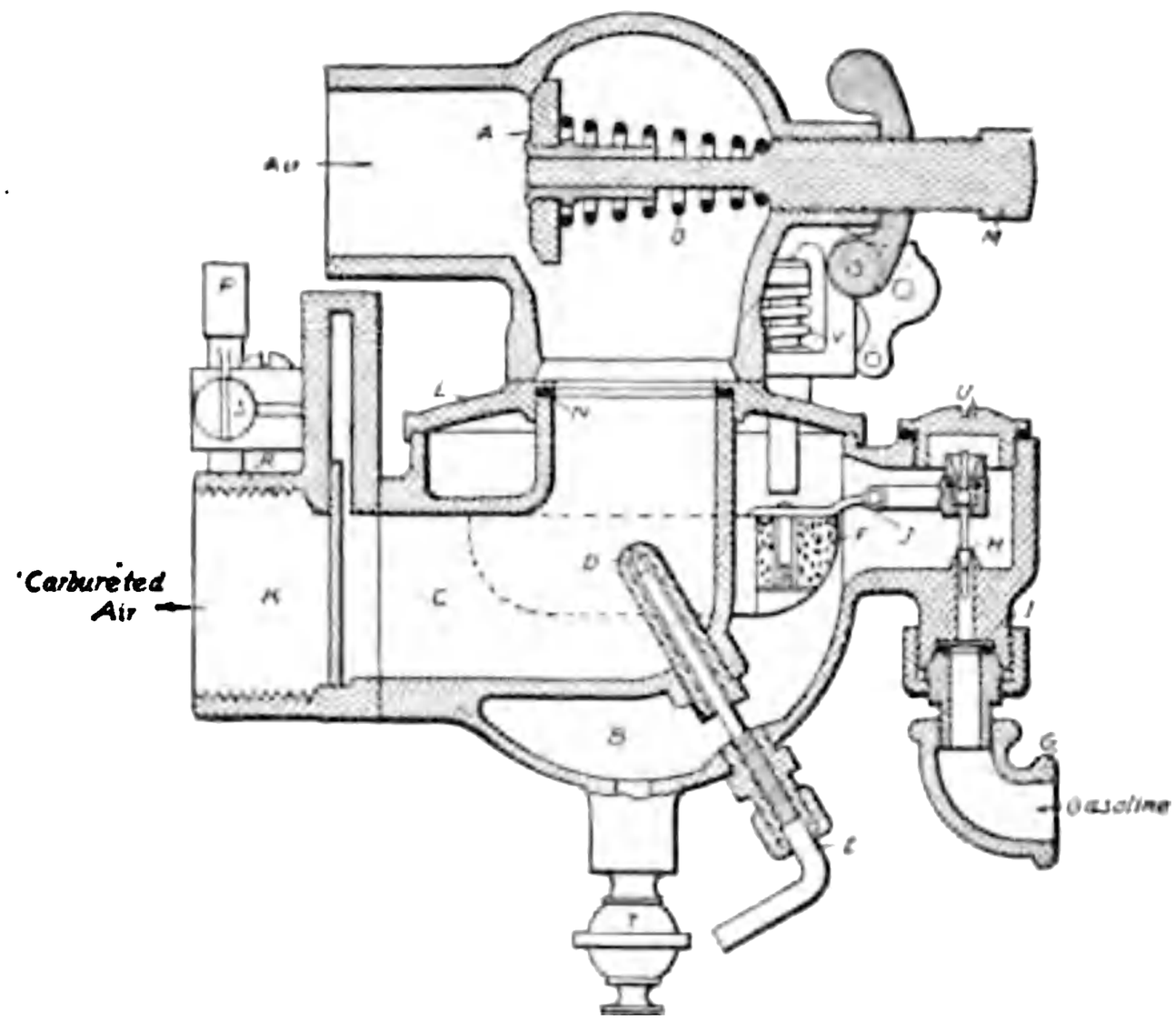

Fig. 96. Schebler Carbureter.

The spraying of the gasoline must occur only when air is being drawn into the cylinder; consequently it is possible and usual to make the spraying result from the action of the suction during the admission stroke.

In the most common forms, the gasoline is kept at a constant level in the carbureter by means of a float. In Fig. 96 the U-shaped float *F* (which is hinged at *J*) lifts, when it falls, the needle-valve *H*, permitting gasoline to enter by gravity from the reservoir, through *G*, into the float-chamber *B*. As the gasoline rises in the chamber, it lifts the cork float *F* and closes the gasoline-admission valve. The float consequently keeps the gasoline at a constant level. This constant level is a little below the outlet of the spraying nozzle *D*.

Air enters the carbureter on each suction stroke of the engine; and passing through the mixing chamber *C* with considerable velocity, creates a slight vacuum there, sufficient to suck gasoline up through the spraying nozzle and to cause an intimate mixture of the gasoline with the air. The amount of gasoline admitted is controlled by the needle-valve *E*.

This carbureter has another feature in common with most automobile carbureters—namely, a device for automatically adjusting the opening for the air-supply as the engine speed changes. The compensating air-valve *A* remains in the position shown when the engine

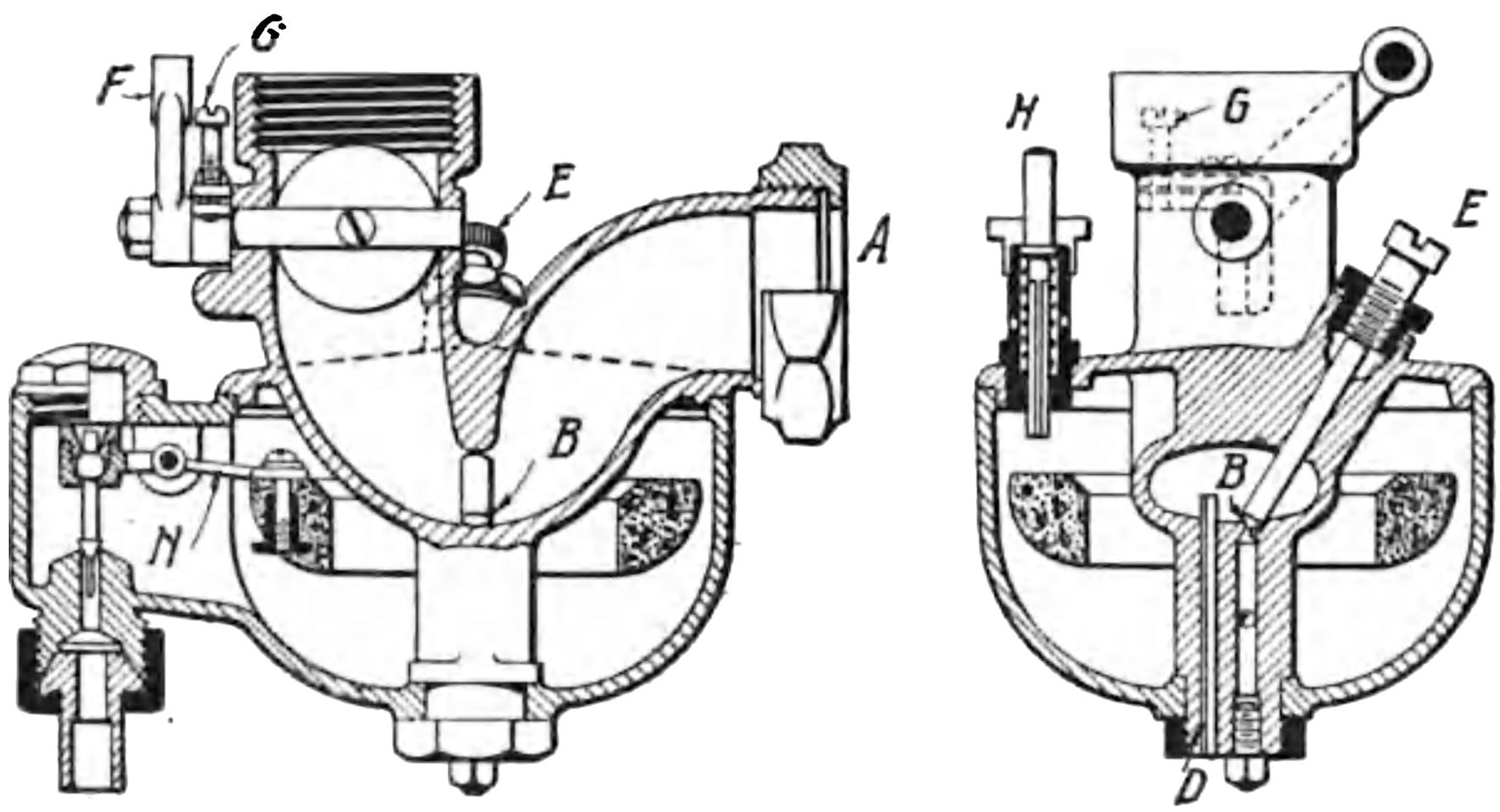

Fig. 97. Holley Carbureter.

is going at its lowest speed; as the speed increases, the velocity of the air through the carbureter is greater, and consequently the vacuum in the mixing chamber is increased. This results in an opening of the valve *A* against the resistance of the spring *O*, to an extent which depends on the engine speed. At the same time, the increased vacuum in *C* increases the gasoline flow through *D*. The increase of air and gasoline should both be in the same proportion, so that when once adjusted for a good mixture, the variation in speed of the engine should not alter that mixture. The throttle-valve *K*, worked by the lever *P*, controls the amount of the carbureted air going to the engine. The flushing pin or tickler *V*, when pushed down, keeps the float depressed, and permits gasoline to flow through *D* into the mixing chamber *C* before starting, so as to ensure the admission of an explosive mixture to the cylinder when starting up.

Purchase full membership to immediately unlock this page

DELVE INTO FANTASY, MAGIC, MYTHOLOGY & FOLKLORE

Forgotten Books' Full Membership gives access to 797,885 ancient and modern, fiction and non-fiction books.

Continue

*Fair usage policy applies

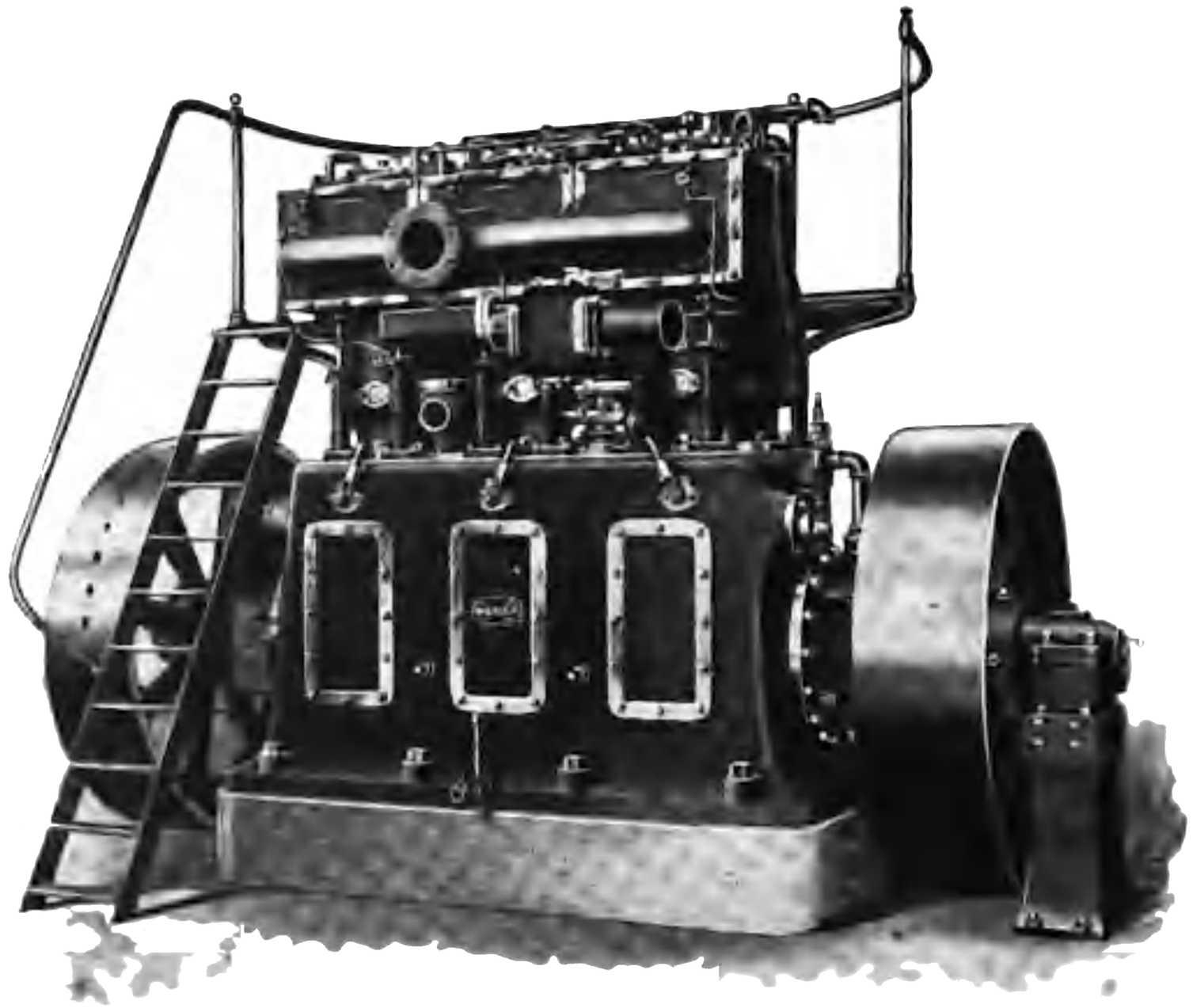

WEBER VERTICAL THREE-CYLINDER GAS ENGINE
Weber Gas Engine Co., Kansas City, Mo.

Another carbureter, shown in Fig. 97, has some special features. The ordinary spraying carbureter must have suction enough to lift the gasoline and make a spray; otherwise it fails to work. In the carbureter shown in Fig. 97, the gasoline is evaporated by causing the air-stream to impinge sharply on a puddle of definite area; and the proportions of the mixture are governed automatically by causing the area of this puddle to increase or diminish as the velocity of the air-stream is less or greater. Air enters at *A*, and passes down and up through the U-shaped mixing tube. Gasoline enters from the float-chamber through an orifice *B*, controlled by the adjustable needle-valve *E*. The normal gasoline level is $\frac{1}{8}$ inch above the bottom of the U, so that a puddle tends to form. At this point the air-passage is constricted, thereby increasing the velocity of the stream. As the motor speed increases, the area of the puddle is gradually diminished, thus preventing the formation of an over-rich mixture. At the highest speeds the puddle is completely wiped out, and an ordinary spray takes its place. To start, the float is depressed by the plunger *H*. An overflow *D* prevents flooding. The throttle is controlled by means of the arm *F* and stop *G*.

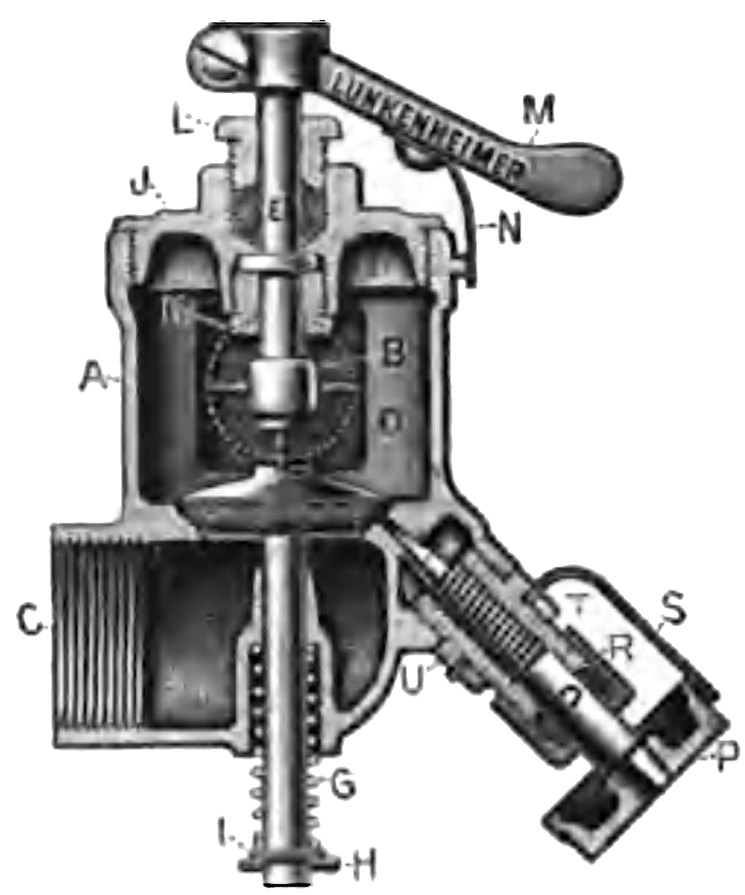

Fig. 98. Section of Generator Valve for Gasoline Engine. Revolving Throttle Controlling Outlet Passage. No Regulation for Lift of Disc.
Lunkenheimer Company, Cincinnati, Ohio.

A simpler form of carbureter, which eliminates the float and other parts, but which has not the same self-regulating qualities, is shown in Fig. 98. It is used principally on two-cycle motor-boat engines During the suction stroke of the engine, the vacuum created in the carbureter lifts the valve *F* off its seat, against the resistance of the spring *G*, and permits air to enter through *C*. The gasoline, which is stored at a level slightly higher than that of the carbureter, enters through a hole in the seat of the valve *F* whenever that valve is off its seat. The amount flowing is regulated by the needle-valve *O*. The amount of the mixture going to the engine (through *B*) is adjusted by the revolving throttle *D* and the lever *M* which operates it. Such a carbureter (or generator valve) requires much more ad-

justment than the usual automobile carbureter. The flow of gasoline will decrease as the level in the storage tank decreases; the rate of flow increases with the speed of the engine, on account of the increase of vacuum in the generator valve. Carbureters of this type are generally wasteful of gasoline.

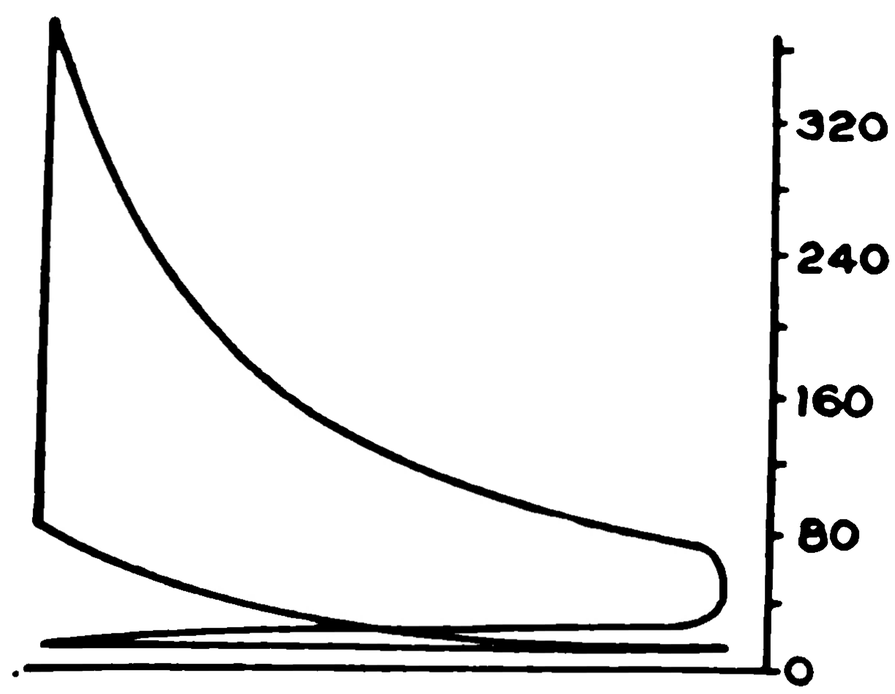

Fig. 99. Indicator Card of Gasoline Engine.

An engine using gasoline is usually provided with a clearance space somewhat larger than that used in a gas engine, so as to prevent excessive pressures during explosion. The indicator card, Fig. 99, taken from a gasoline engine, shows the rapidity and force of the explosion.

KEROSENE AND CRUDE-OIL ENGINES

There are two ways of preparing heavier oils such as kerosene, crude oil, or fuel oil, for combustion in an engine: (1) by preliminary vaporization; (2) by spraying the liquid fuel in an atomized condition into a cylinder containing highly compressed air at a high temperature, as in the Diesel engine to be described shortly. If a vaporizer is used, it is heated either by exhaust gases on the outside, or by the explosion taking place within it. It requires always a preliminary heating

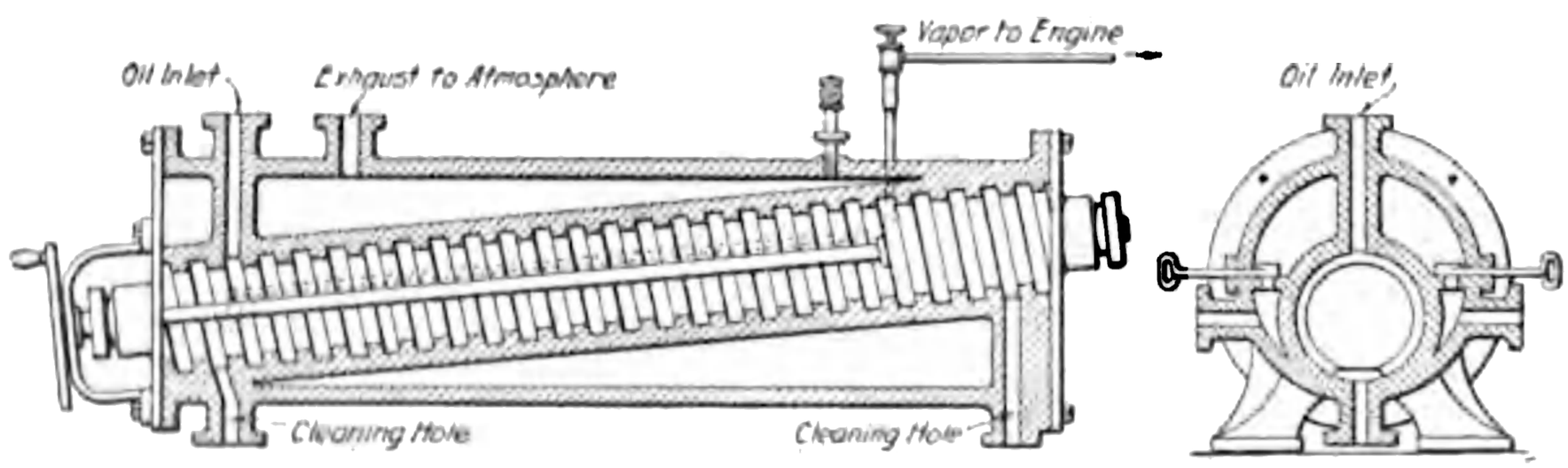

Fig. 100. External Vaporizer for Crude Oil.

before the engine can be started (unless, indeed, the engine is started with gasoline), and consequently is not so quickly put in action as a gasoline engine. The vaporization of the heavier oil differs from that of gasoline in that it is not necessarily a process of carburetion. It is

Purchase full membership to immediately unlock this page

HISTORY

Tens of thousands of important historical sources, many previously unobtainable, are now available for the first time with a Forgotten Books Full Membership.

Unlimited Access
$8.99/month

Continue

*Fair usage policy applies

for combustion enters at *E*, and is heated and mixed with the vapors. The unvaporized part of the oil drops, as the drum rotates, into the reservoir at the base of the vaporizer, and is automatically drained. With this kind of vaporizer, there is little chance of decomposition of the oil by reason of high temperatures; on the other hand, a considerable proportion of a crude oil will go off unused.

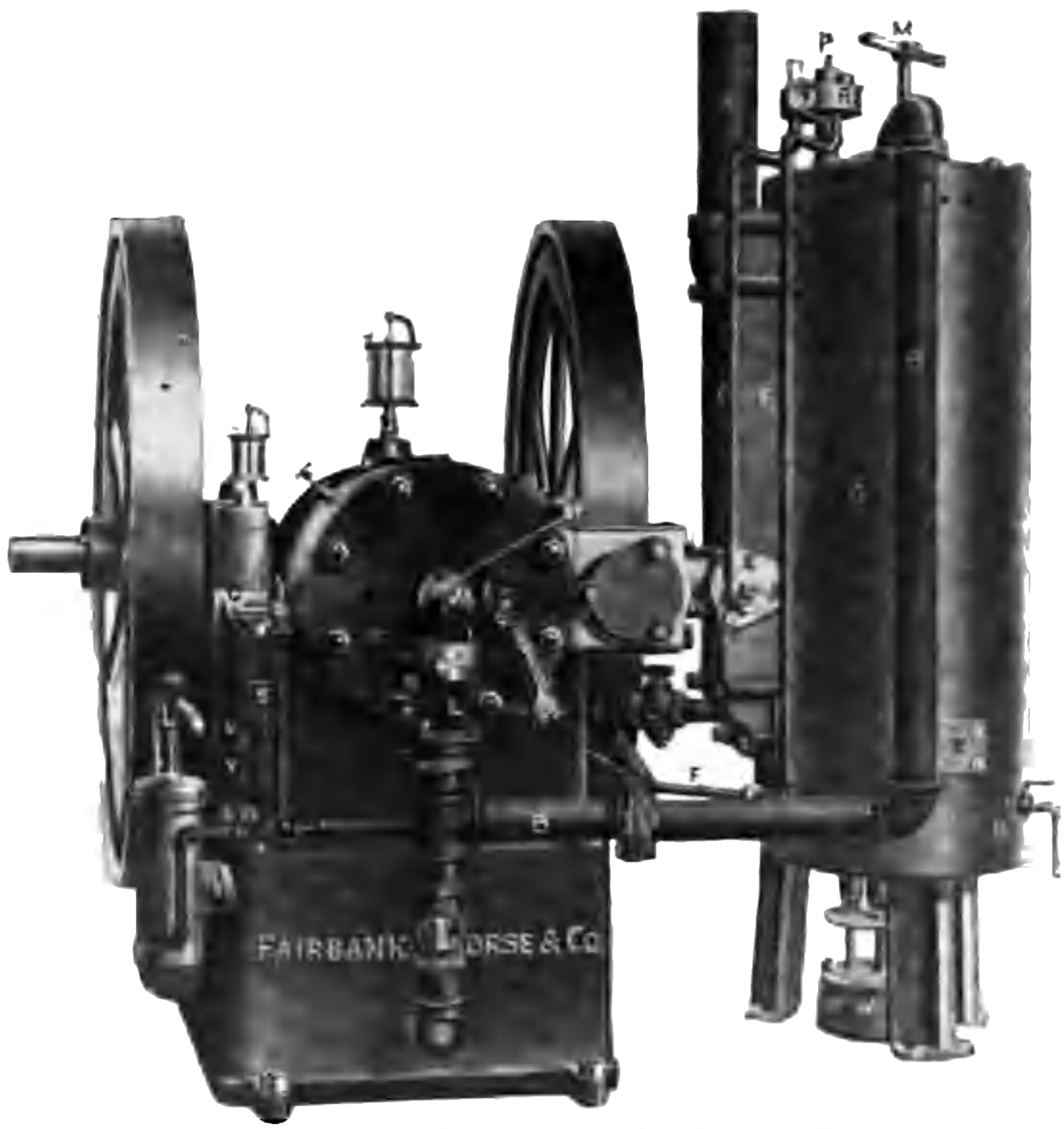

Fig. 102. Fairbanks-Morse Engine Arranged for Burning Heavy Crude Oil.

Where kerosene is used, it is sometimes broken up into a fine spray or mist by a current of air, and is then sent to a vaporizer before being admitted to the cylinder. In the vaporizer the carbureted air is raised to a high temperature, the heat of the exhaust gases being utilized for this purpose, and the kerosene is converted into a vapor. Unless the kerosene is completely vaporized before admission to the cylinder, it is difficult to insure its complete combustion. Some of the liquid kerosene in the cylinder may decompose or break up into its elements as a result of the very high temperature to which it is

subjected, and carbon will then deposit itself on the piston and the walls of the clearance space as a hard coating.

Another device for vaporizing heavy crude oil, such as is found in the Texas oil fields, is shown in Fig. 102. The generator *G* is placed close to the engine, so that the hot exhaust gases coming through the pipe *N* shall not be appreciably cooled before reaching it. The oil pumped by the engine goes through the pipe *F* to the small reservoir *R* on top of the generator, any excess returning by the overflow pipe *O* to the main supply tank. The amount of oil entering the generator is controlled by the throttle-valve *T* at the reservoir *R*. The oil trickles down over surfaces which are heated by the exhaust gases, and is partly or completely vaporized. Any unconsumed residue drains off through the cock *D* at the bottom of the generator. The temperature in the generator is regulated by a heat valve *E*, which may be set so as to circulate all or any fraction of the exhaust gases through the heating coil of the generator, the rest being sent directly to the exhaust pipe *X*. Air is drawn into the lower part of the generator through the pipe *C*; and the mixture of air and vapor, leaving the top of the generator by the pipe *B*, meets a fresh supply of air arriving through the valve *A* before being admitted to the cylinder. When kerosene is to be used, the generator is very much smaller, but the general arrangement is similar.

Internal Vaporizers. The internal vaporizer is always a part of the combustion space of the engine. A well-known example is shown in Figs. 103 and 104, which are sections of an engine using kerosene or crude oil. A combustion chamber or vaporizer is attached to the end of the cylinder, and communicates with it through a narrow neck. The outer part of the vaporizer is unjacketed, and consequently is kept at a good red heat by the successive explosions. The engine follows the usual four-stroke cycle. During the admission stroke, air alone is admitted to the cylinder, while oil is injected into the vaporizer and is vaporized there. During the return stroke, the air is compressed into the vaporizer, mixes with the oil vapor, and forms an explosive mixture which is ignited by the hot walls of the combustion chamber. The proportions of the combustion chamber are designed so that the explosion does not occur till near the end of the compression stroke. The fuel supply is regulated by the governor, which controls a by-pass permitting part of the discharge from the pump

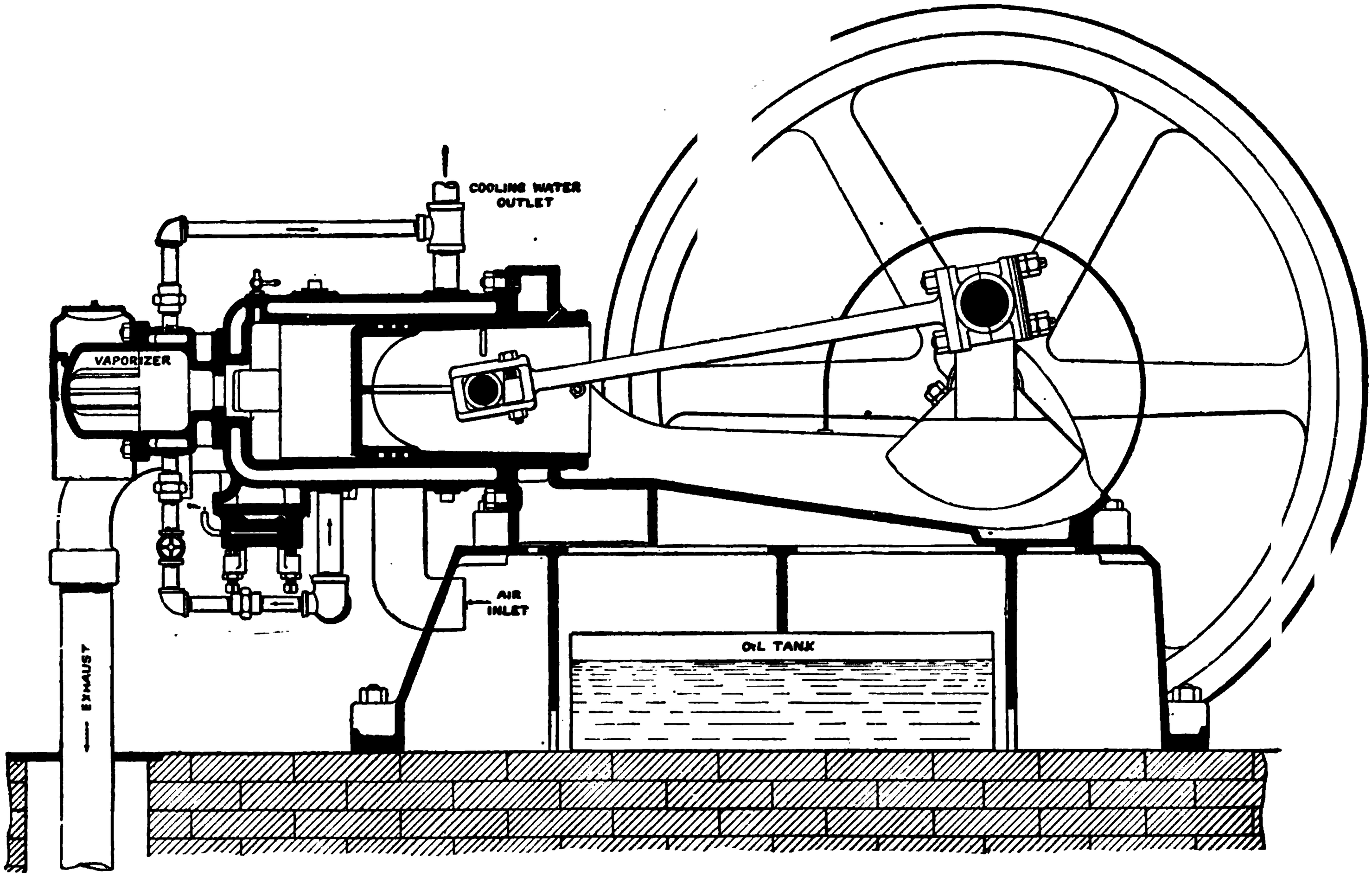

Fig. 103. Longitudinal Section of Hornsby-Akroyd Oil Engine. De La Vergne Machine Company, New York, N. Y.

Purchase full membership to immediately unlock this page

DELVE INTO FANTASY, MAGIC, MYTHOLOGY & FOLKLORE

Forgotten Books' Full Membership gives access to 797,885 ancient and modern, fiction and non-fiction books.

Continue

*Fair usage policy applies

the projecting lip of the hot bulb *C*. The bulb is heated to a dull red heat by the kerosene burner *D* before starting up, and is maintained at that temperature by the explosions when the engine is running. The cylinder-head is not jacketed. The amount of oil delivered is regulated by the governor. Air is taken into the closed crank-case from the interior of the base, through the suction port when that is

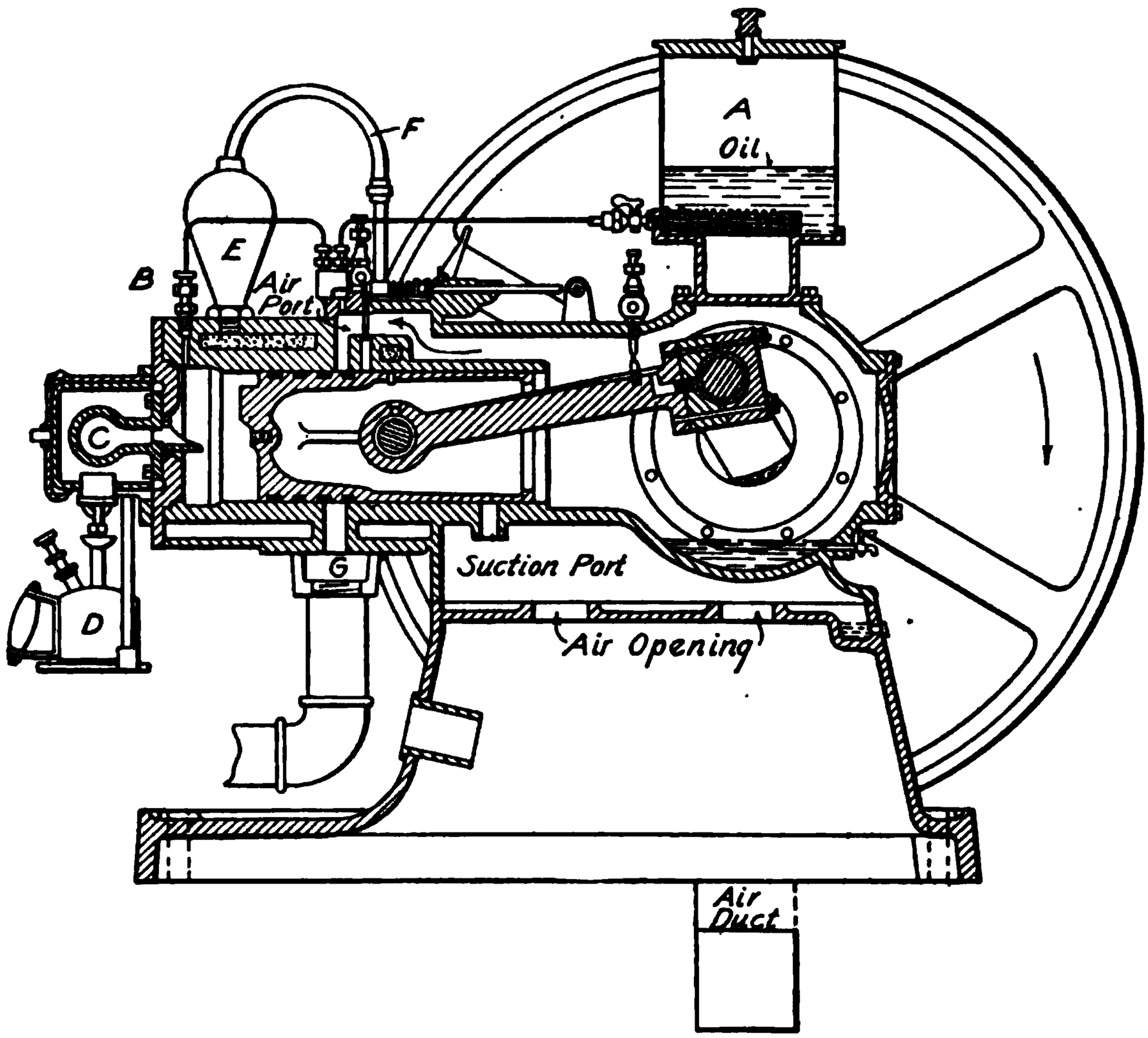

Fig. 105. Mietz & Weiss Oil Engine.

uncovered near the end of the compression stroke. The air enters the cylinder (after slight pre-compression in the crank-case) through the air-port, in the way usual with two-cycle engines. It carries with it whatever steam has been formed in the jacket, the steam coming from the chamber *E* through the pipe *F* to the air-port. The water level in the jacket is kept constant by a float (not shown). The oil is injected into the cylinder during the compression stroke. The air being compressed enters the hot bulb *C*, carrying with it some of the vapor of the oil that has fallen on the projecting lip; and near the end of the compression stroke the conditions as to pressure and tem-

perature in the vaporizer are such as to cause ignition and explosion. The exhaust occurs through the port *G*. The presence of the steam reduces the pressure resulting from explosion, and permits a higher compression.

The combustion in an engine of this kind cannot be as complete as in the type where a thorough mixture of the fuel and air can be brought about. Some of the air admitted will remain inactive, as it does not get near the oil; and consequently such engines are comparatively large for the power they develop. Moreover, in all engines with internal red-hot vaporizers, a certain amount of decomposition of the fuel, and deposition of carbon, must take place.

THE DIESEL CYCLE

All the engines discussed so far have operated on the Otto cycle or some modification of that cycle. There has come into use for crude-oil or fuel-oil engines another cycle of operations, known as the *Diesel cycle*, which merits attention because of its high efficiency. The cycle will operate equally well with gas or gasoline, but is naturally used with the cheaper fuels. The Diesel cycle resembles the Otto cycle in requiring four strokes for its completion. The first out-stroke draws into the cylinder a charge of pure air alone, without any admixture of the fuel. On the return stroke the air is compressed; and since the clearance in this engine is only about seven per cent of the cylinder volume, the pressure at the end of compression rises to about 500 pounds per square inch, and the temperature of the air to about 1,000° F. As this high pressure is reached gradually, it does not cause a shock to the engine, such as an explosion to the same pressure would give. At the beginning of the second out-stroke, the oil-admission valve opens, and a charge of oil is blown into the cylinder in the form of a fine spray by a small quantity of air which has been compressed in a special compressor to about 550 pounds. The moment the entering oil meets the highly heated air in the clearance space, it ignites and burns. The combustion goes on as long as the fuel is being blown in—usually for about one-tenth of the forward stroke; and since there is no large quantity burning at any instant, there is nothing in the nature of an explosion. Usually the heat generated by the combustion is not sufficient to prevent the pressure in the cylinder falling while the admission is taking place, so that the admission

line on the indicator card falls below a constant-pressure line as seen in the indicator card, Fig. 106. The method of burning is, in fact, essentially similar to that of an ordinary gas burner, and not to that of an explosive mixture; and consequently the oil will burn with any excess of air present. After the admission valve has closed, the charge expands, and then is exhausted on the return stroke. The indicator

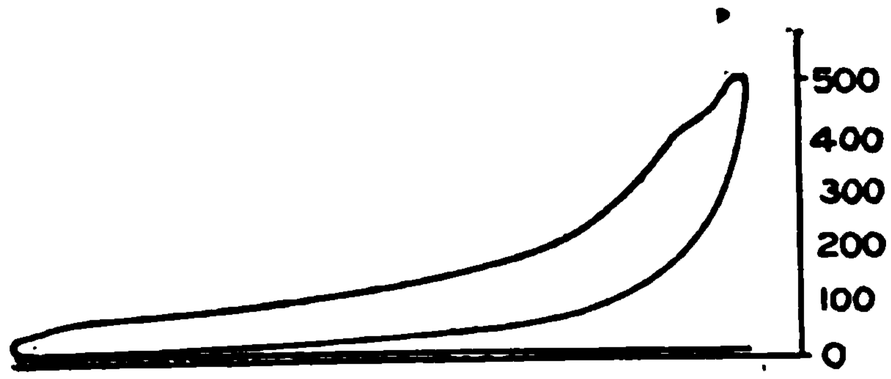

Fig. 106. Indicator Card, Diesel Engine.

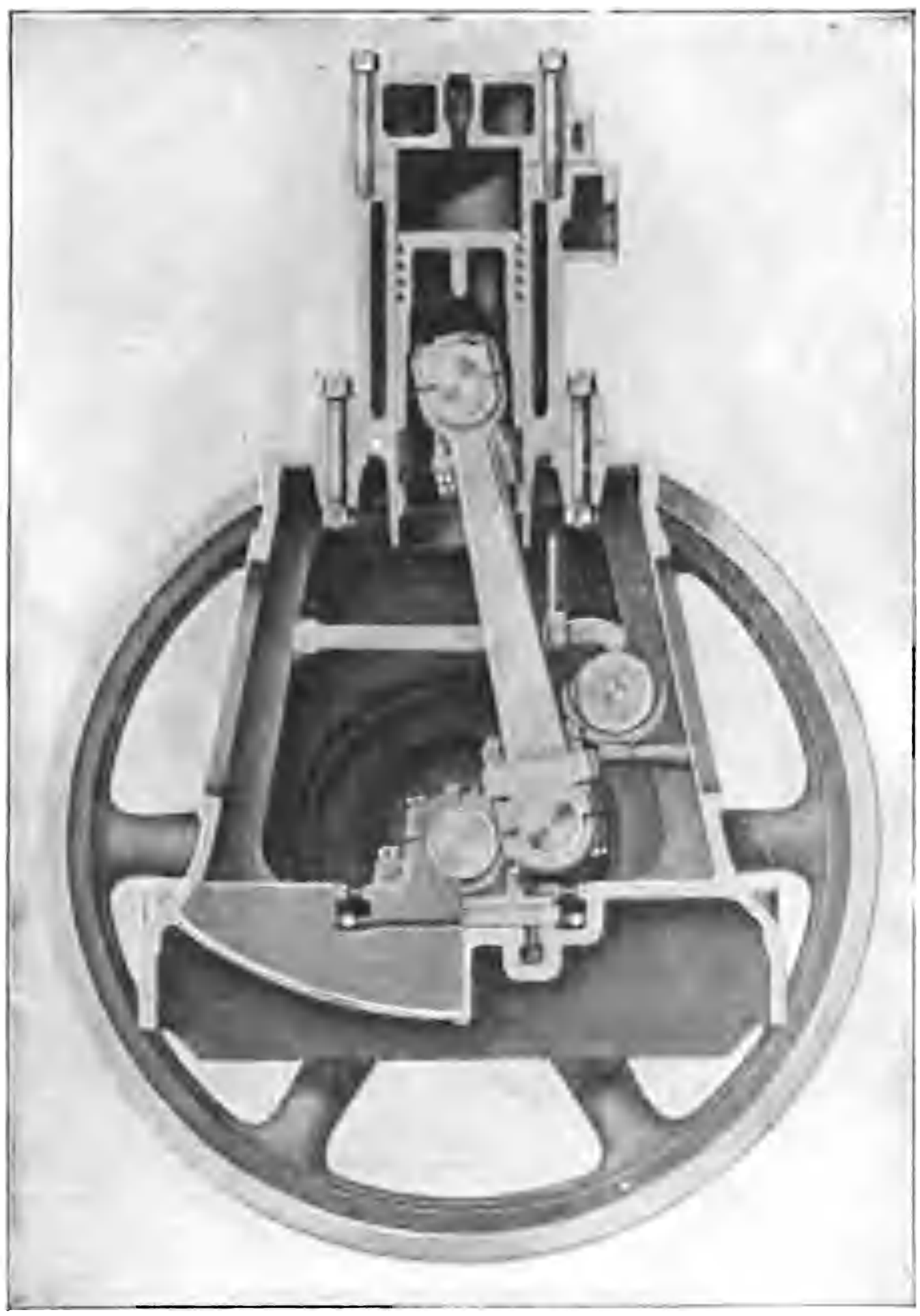

Fig. 107. Sectional View, Diesel Engine.

card, Fig. 106, shows the cycle of operations of the Diesel engine.

The general structure of the engine, and a detail of the valves,

Purchase full membership to immediately unlock this page

HISTORY

Tens of thousands of important historical sources, many previously unobtainable, are now available for the first time with a Forgotten Books Full Membership.

Unlimited Access
$8.99/month

Continue

*Fair usage policy applies

cylinder. The engine is started by compressed air from an auxiliary reservoir, a special starting valve being used for the purpose. Diesel engines have, under test, converted more than 35 per cent of the heat of combustion of the oil into work done in the cylinder.

The same general precautions are necessary in running an oil engine as in running a gas engine, and the same troubles are likely to occur. The starting by hand of a gasoline engine of small size has been described already. If the engine fails to start, it will probably be because either too much or too little gasoline was admitted. The amount admitted for starting must be varied with the temperature of the cylinder. In cold weather, about twice the normal amount must be used; while on the other hand, if the engine has been running and has been shut down for a short time only, a considerably diminished charge is necessary.

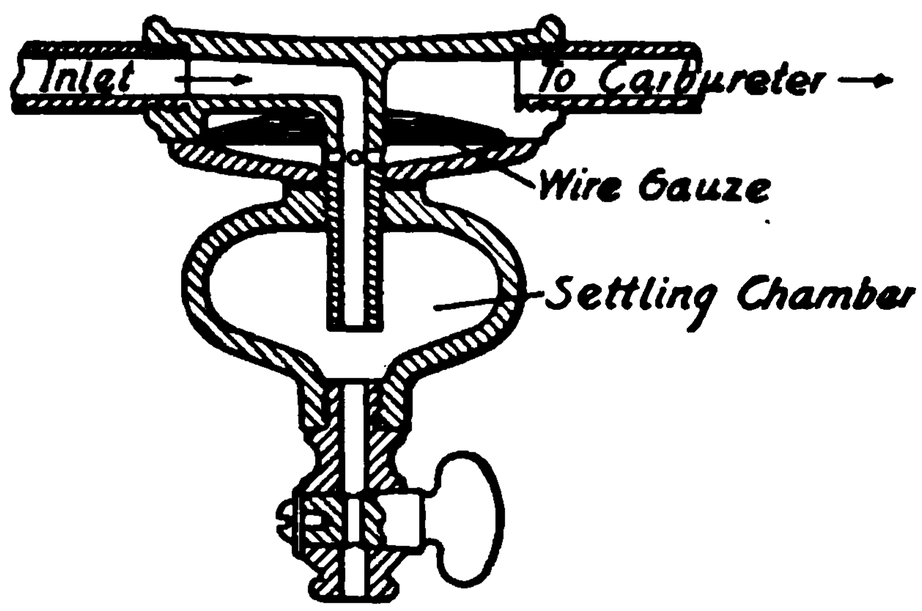

Fig. 109. Gasoline Strainer.

Great care must be taken, by the use of suitable strainers, that no solid foreign matter gets into the oil supply-pipe; otherwise there is great liability to obstruction of the flow. A strainer for an automobile engine is shown in Fig. 109. Owing to its more rapid explosion and to the greater richness of the explosive charge, a gasoline engine will develop more power than a gas engine of the same size, even when the latter uses natural gas.

OIL CONSUMPTION

The consumption of gasoline in an engine of small size averages about one-tenth of a gallon per brake horse-power per hour. In the Diesel motor, the average consumption of crude oil per brake horse-power per hour is less than one-tenth of a gallon.

The field for the use of the oil engine is very extended. It is the most compact of the heat engines, requiring nothing equivalent to boiler or gas generator, and consequently is inherently the most suitable for purposes of transportation. Its extensive adoption in automobiles and motor-boats is being followed by its application to locomotives and to large vessels. The absence of boiler

and of gas-generator losses makes it both potentially and actually the most efficient of all heat engines.

The relative cost of power developed by oil, gas, and steam engines depends on the cost of the oil and of coal, and this varies with the locality and the kind of oil or coal. In refining Pennsylvania or Ohio petroleum, not over ten per cent of the oil can be collected as gasoline, so that this oil, which is the easiest to use, is not available in as large quantity as the heavier oils, and consequently has a considerably higher cost. Kerosene forms twenty-five to fifty per cent of the crude oil and is consequently cheaper. Fuel oil and crude oil are the cheapest, but are also the most difficult to burn satisfactorily.

DENATURED ALCOHOL

The recent action of the United States Government in removing the excise duty from denatured alcohol, has made that substance commercially available for use in internal-combustion motors. There are two principal kinds of alcohol: (1) *Ethyl* or *grain alcohol* (C_2H_6O), which can be made from corn, rye, rice, molasses, beets, or potatoes, by a process of fermentation and distillation; and (2) *methyl* or *wood alcohol* (CH_4O), which is obtained from the destructive distillation of wood. Grain alcohol is that which is present in alcoholic beverages; wood alcohol is a virulent poison. Denatured alcohol is grain alcohol which has been rendered unpalatable and unfit for consumption by the addition of wood alcohol and a little benzine or other substance. One hundred (100) volumes of grain alcohol mixed with ten (10) volumes of wood alcohol and one-half ($\frac{1}{2}$) volume of benzine, is the common composition of denatured alcohol. This substance contains within itself some of the oxygen which is necessary for its combustion. It gives up about 11,800 B. T. U. per pound on burning; consequently it does not give up much more than one-half as much heat per pound as gasoline or kerosene. The weight and volume of denatured alcohol required to develop a given power in an engine, is considerably greater than the amount of gasoline for the same power; and therefore, if a gasoline engine is to be used with alcohol, the orifices in the carbureter or other spraying device have to be enlarged so as to admit a greater volume of the liquid. Wood alcohol cannot be used by itself in a gas engine, as it corrodes the cylinder.

The principal difference between the use of alcohol and gasoline in an engine arises, however, from the lower volatility of alcohol. Denatured alcohol is intermediate between gasoline and kerosene in its volatility. The amount of vapor which it gives off to air that passes over it, will generally be sufficient to give an explosive mixture if the temperatures of the air and alcohol are above 70° F. With an ordinary spray carbureter, a considerable excess of alcohol may be sent to the cylinder, as such carbureters act also as atomizers. If alcohol is supplied in considerable excess, there may still be good explosions, as the range of explosibility is very great. Most of the ordinary gasoline spray carbureters can be used for alcohol if the spray orifices are enlarged.

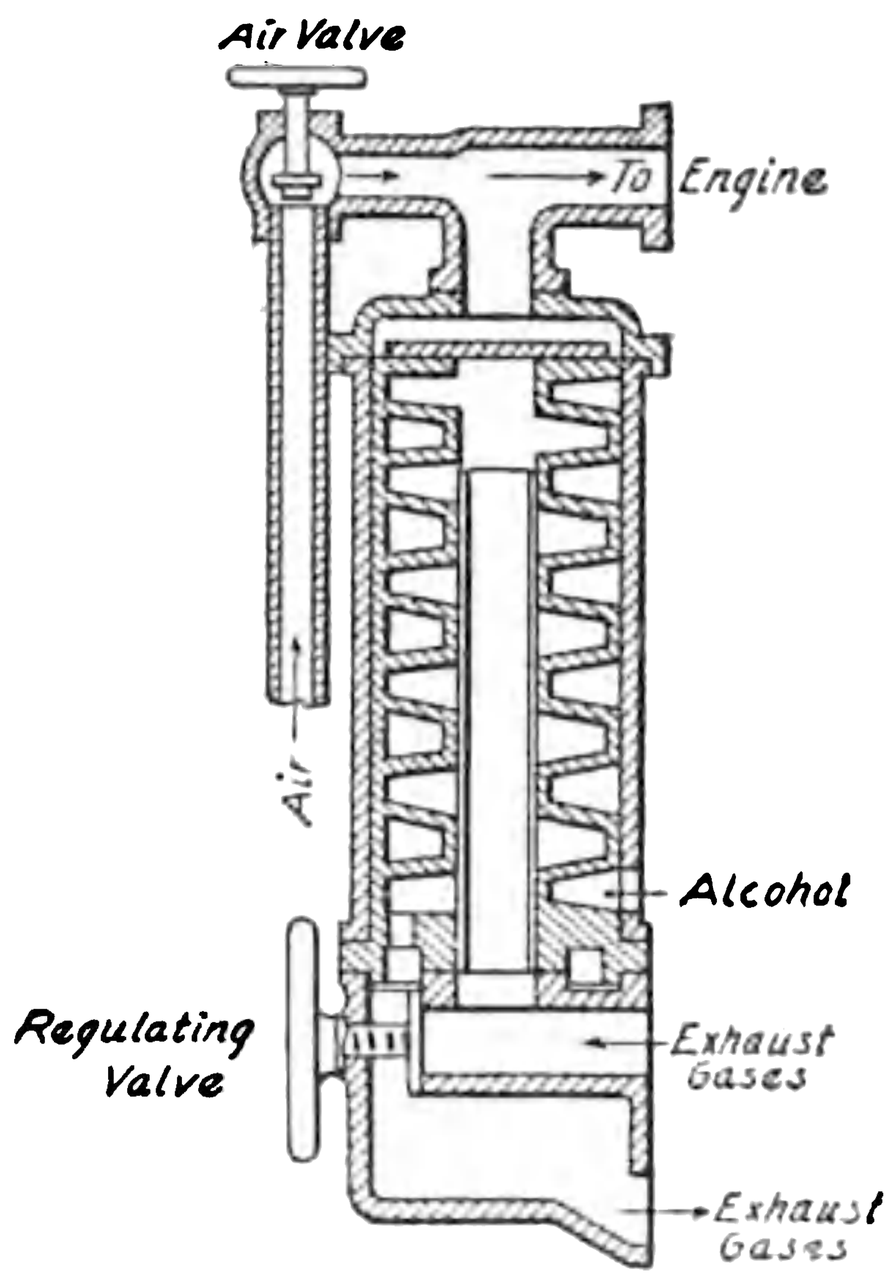

Fig. 110. Alcohol Vaporizer.

A special vaporizer for alcohol is shown in Fig. 110. The hot exhaust gases enter at the bottom; and a certain proportion of them, as determined by the regulating valve, rise to the top of the internal pipe, and then descend between that pipe and the helical cast-iron vaporizer. The alcohol is admitted near the bottom on the outside of the helix, and, being vaporized by the heat, flows upward around the helix, escaping to the motor at the top in a highly superheated state. The superheating prevents any condensation of the alcohol between the vaporizer and the cylinder. Air enters with the alcohol vapor as indicated. This vaporizer is of the boiling type, the rate of boiling being determined by the volume of the exhaust gases admitted to the helix.

Recent tests have demonstrated that any gasoline or kerosene engine can operate with alcohol without any structural changes, and that about 1.8 times as much alcohol as gasoline is required to develop the same power. Alcohol can be used with greater compression, as there is little danger of pre-ignition through too much

Purchase full membership to immediately unlock this page

DELVE INTO FANTASY, MAGIC, MYTHOLOGY & FOLKLORE

Forgotten Books' Full Membership gives access to 797,885 ancient and modern, fiction and non-fiction books.

Continue

*Fair usage policy applies

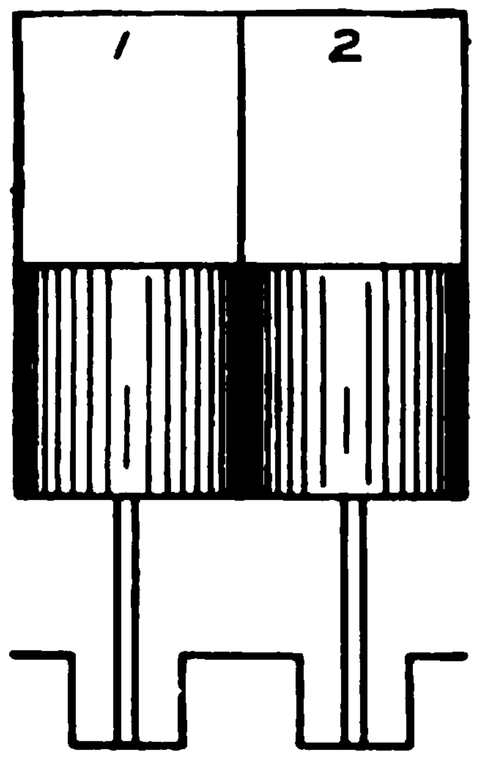

Two Cylinder
Cranks at 360°

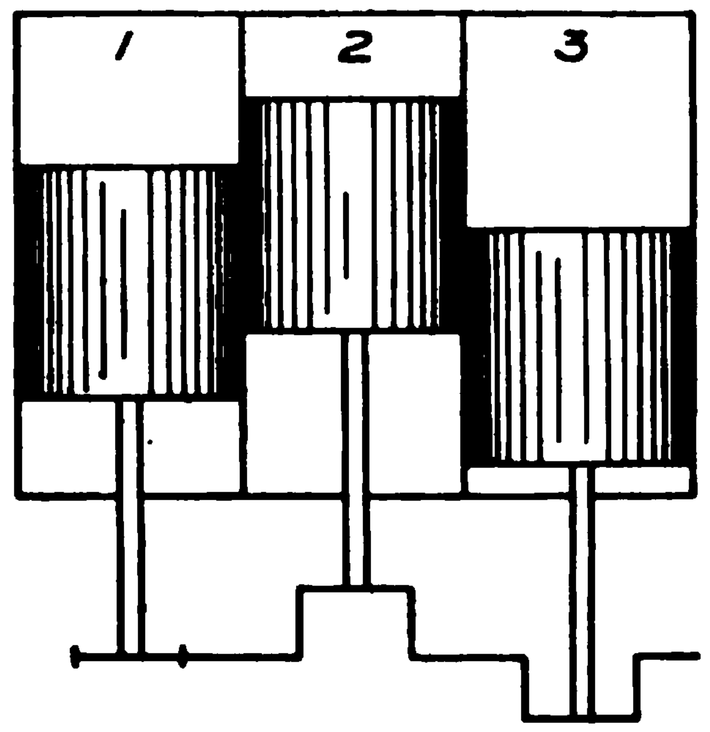

Three Cylinder
Cranks at 120°
Fired 1-3-2

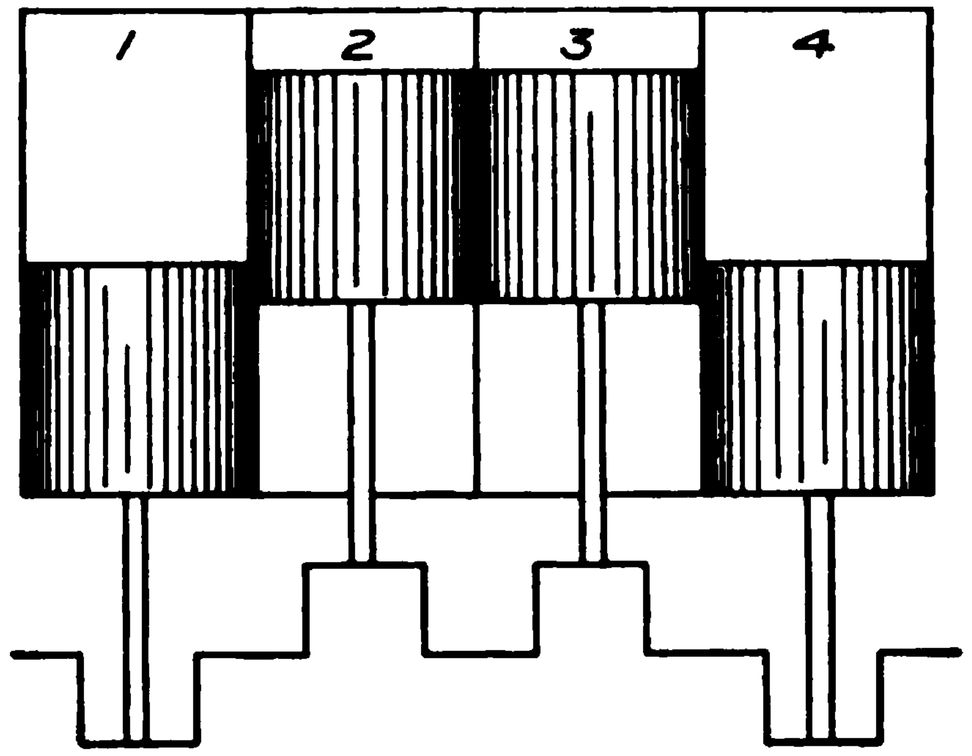

Four Cylinder
Cranks at 180°
Fired 1-3-4-2

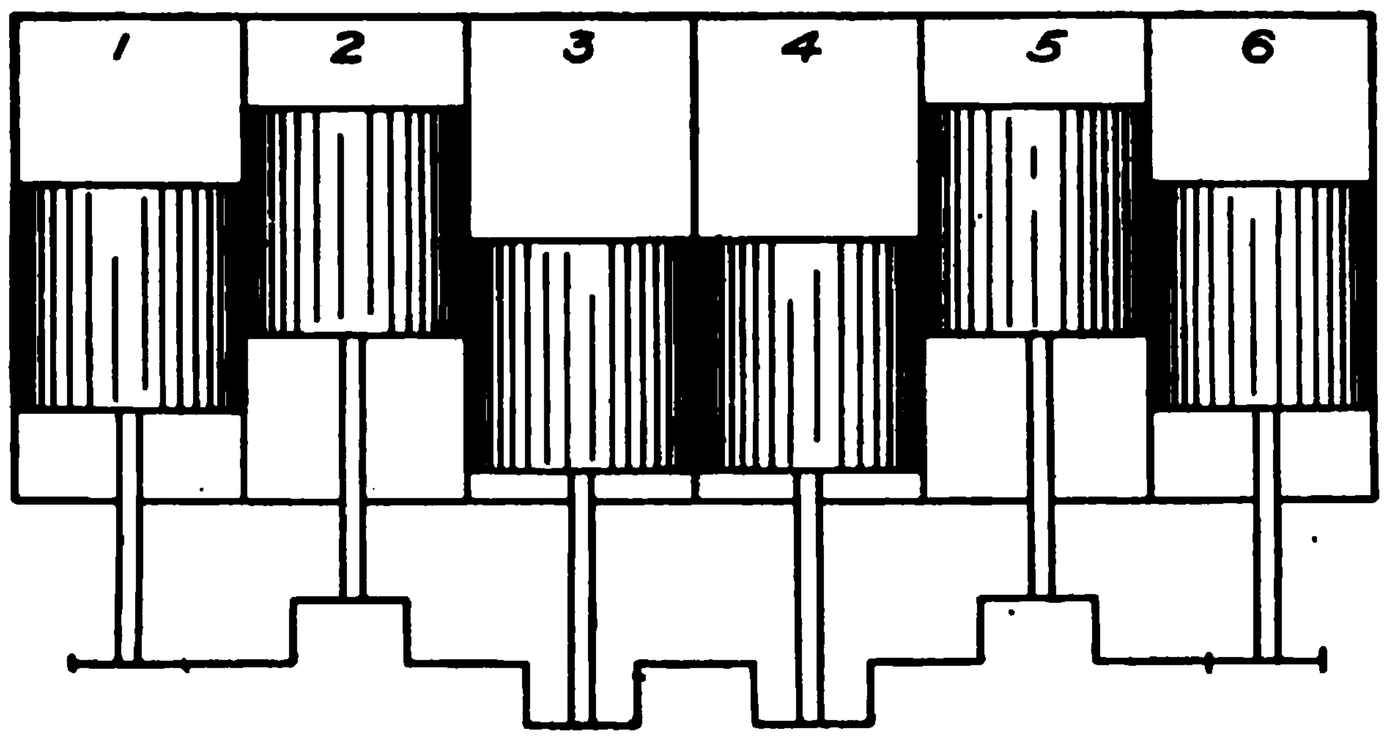

Six Cylinder
Cranks at 120°
Fired 1-5-3-6-2-4

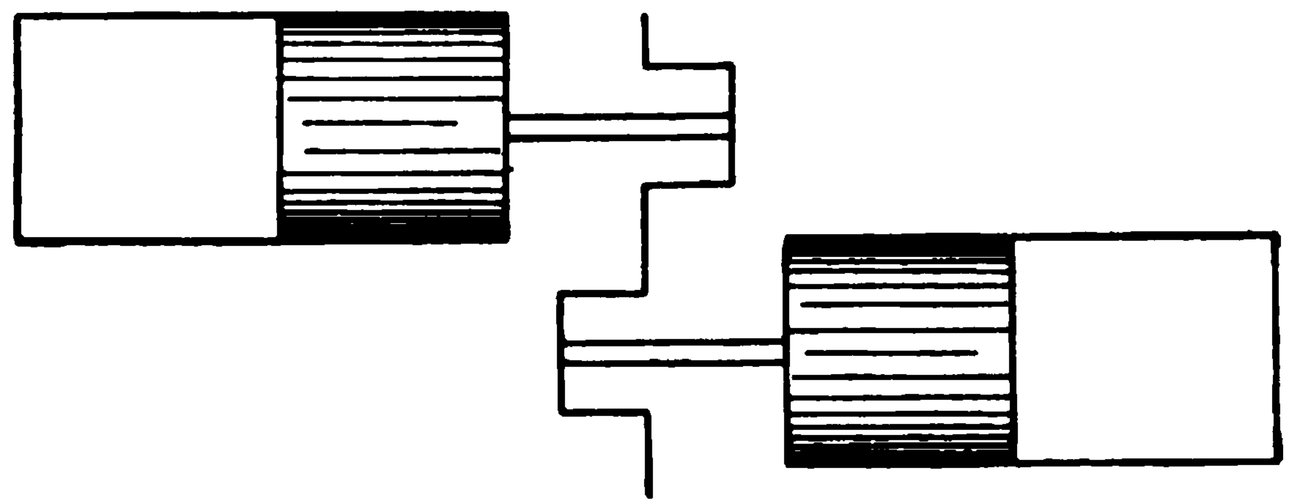

Opposed Cylinder Horizontal Engine
Cranks at 180°

Fig. 111. Arrangement of Multi-Cylinder Four-Cycle Engines for Best Balancing.

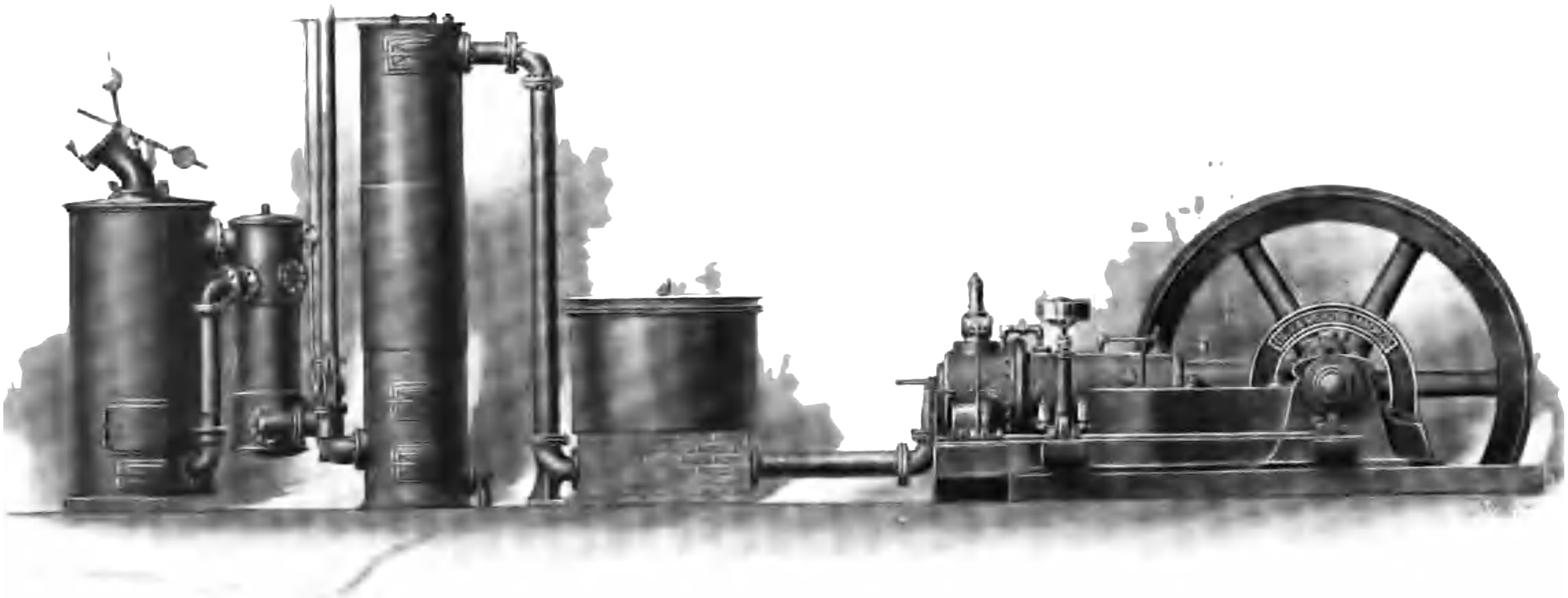

KOERTING SUCTION GAS-PRODUCER AND FOUR-CYCLE GAS ENGINE
De La Vergne Machine Co., New York, N. Y.

Purchase full membership to immediately unlock this page

HISTORY

Tens of thousands of important historical sources, many previously unobtainable, are now available for the first time with a Forgotten Books Full Membership.

Unlimited Access
$8.99/month

Continue

*Fair usage policy applies

best arrangement of cranks and order of firing for other multi-cylinder four-cycle engines.

There are several standard arrangements of the valves in automobile engines. The two valves may be on one side of the cylinder, on opposite sides of the cylinder, in the head, or else one on the side and one in the head. An example of the first arrangement is shown in Fig. 112. The cylinder, valve-chest, and jacket are in one casting; the head is separate, is air-cooled, and screws into the cylinder, making a gas-tight joint against a taper seat without packing. The valves and valve-stems are side by side, and to the latter are screwed short arms carrying the rollers on which the cams act. The cam-shaft is driven through a single pair of spur gears. The openings above the valves are closed by plugs held against narrow ground seats by two yokes. The crank-case is of aluminum. The spark-plugs are just over the inlet valves.

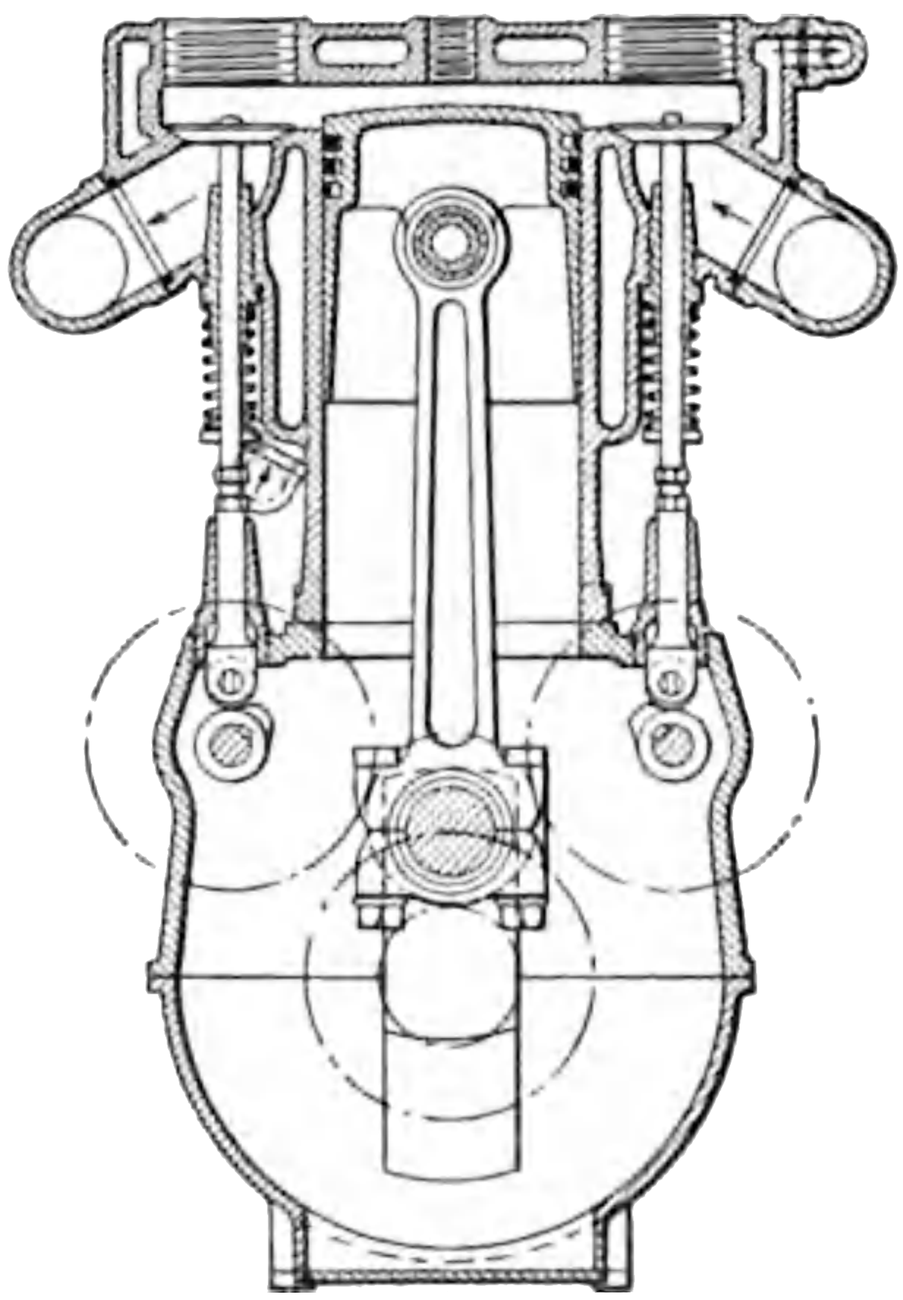

Fig. 113. Automobile Engine.

The arrangement of an automobile engine cylinder with valves on opposite sides, is shown in Fig. 113. This design requires two cam-shafts, which, in the figure, are shown driven through an intermediate gear.

When the valves are placed on top, it is necessary to use levers between the push-rods and the valves, with some such arrangement as that shown in Fig. 115. Engines having valves on top are illustrated in Figs. 68, 114, and 115. The inlet valve is here placed immediately over the exhaust valve. The exhaust valve is operated directly by a push-rod; the inlet valve is worked by a separate push-rod, through a rocker arm fulcrumed on the cylinder-head. The spark-plug is located between the two valves.

MARINE ENGINES

The principal difference between marine and automobile practice is in the much more extended use of two-cycle engines for small powers in motor-boats. Where four-cycle engines are used, they do

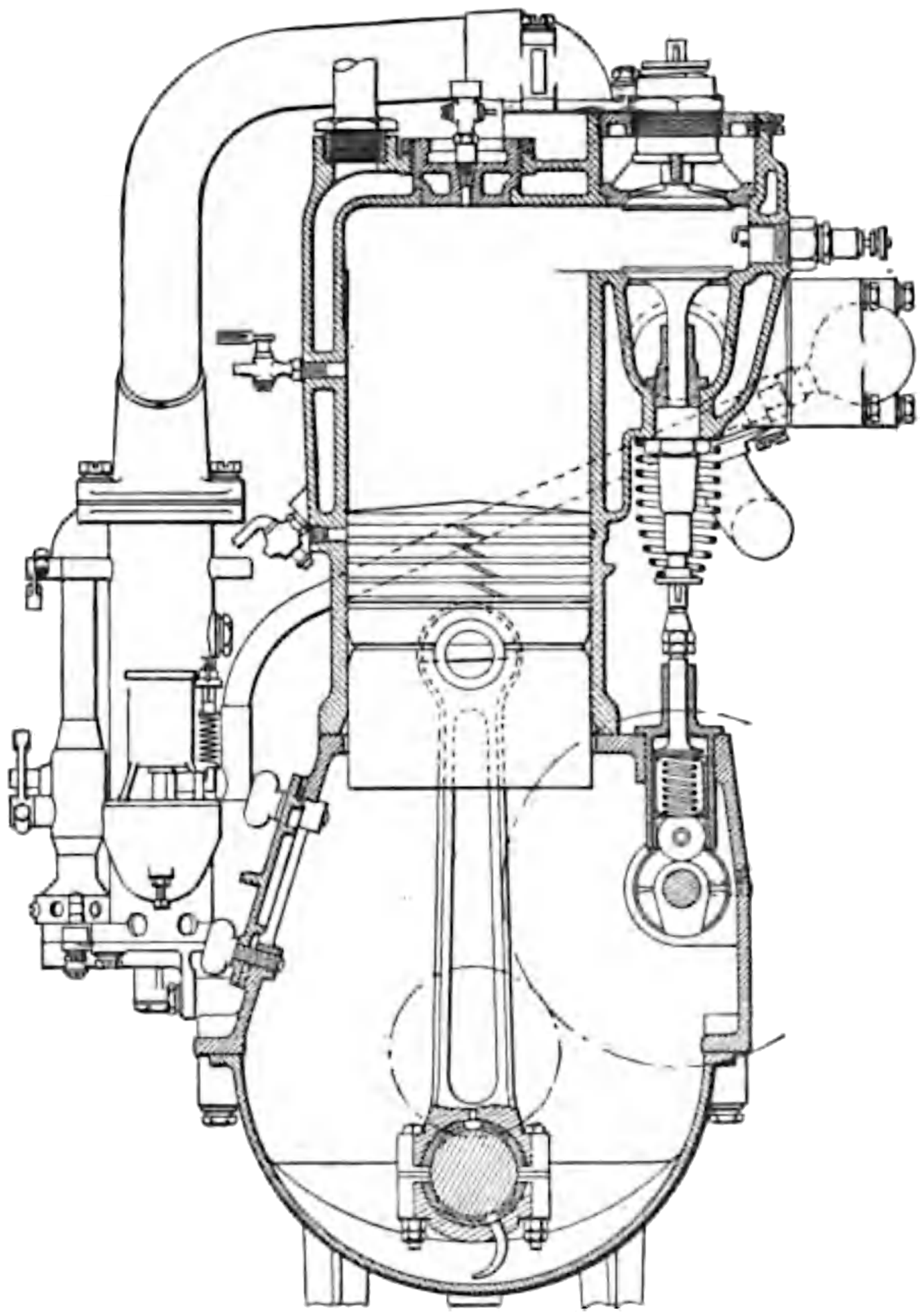

Fig. 114. Columbia Automobile Engine.

not differ appreciably from automobile engines, except that they are very generally made stronger and heavier, often of larger size and lower speed.

CARE OF A GAS ENGINE

For the successful operation of a gas engine, intelligent care and accurate adjustment are necessary, as well as an understanding of the processes going on in the cylinder. It sometimes happens that the engine fails to start, although the ordinary starting operations have

been carried out faithfully. The most common causes of this difficulty are incorrect strength of mixture, failure of ignition, or leakage of the charge. The setting of the gas valve which gives a satisfactory mixture one day, may give a non-explosive mixture on the following day as a result of changes in the pressure or composition of the gas, or other cause. The strength of the mixture should be varied in case of failure to start. If this is ineffective, the ignition should be tried. The batteries may have run down as a result of much use or of short-circuiting, and should be tested by short-circuiting momentarily, when they should give a bright spark. Too strong a current is undesirable, as it burns the contact-points rapidly. It is well to have on hand a spare set of cells for putting in circuit. There should always be a switch in the battery circuit, which should be thrown out when the engine is shut down, so as to prevent short-circuiting. If the battery is in good condition, the trouble may be with the electrodes, through their having become fouled or wet; or, in the make-and-break system, through a gumming of the spindle of the moving electrode, which makes it sticky and slow in action. The igniter plug should be withdrawn, and the electrodes examined. The whole igniter circuit should be examined for short circuits.

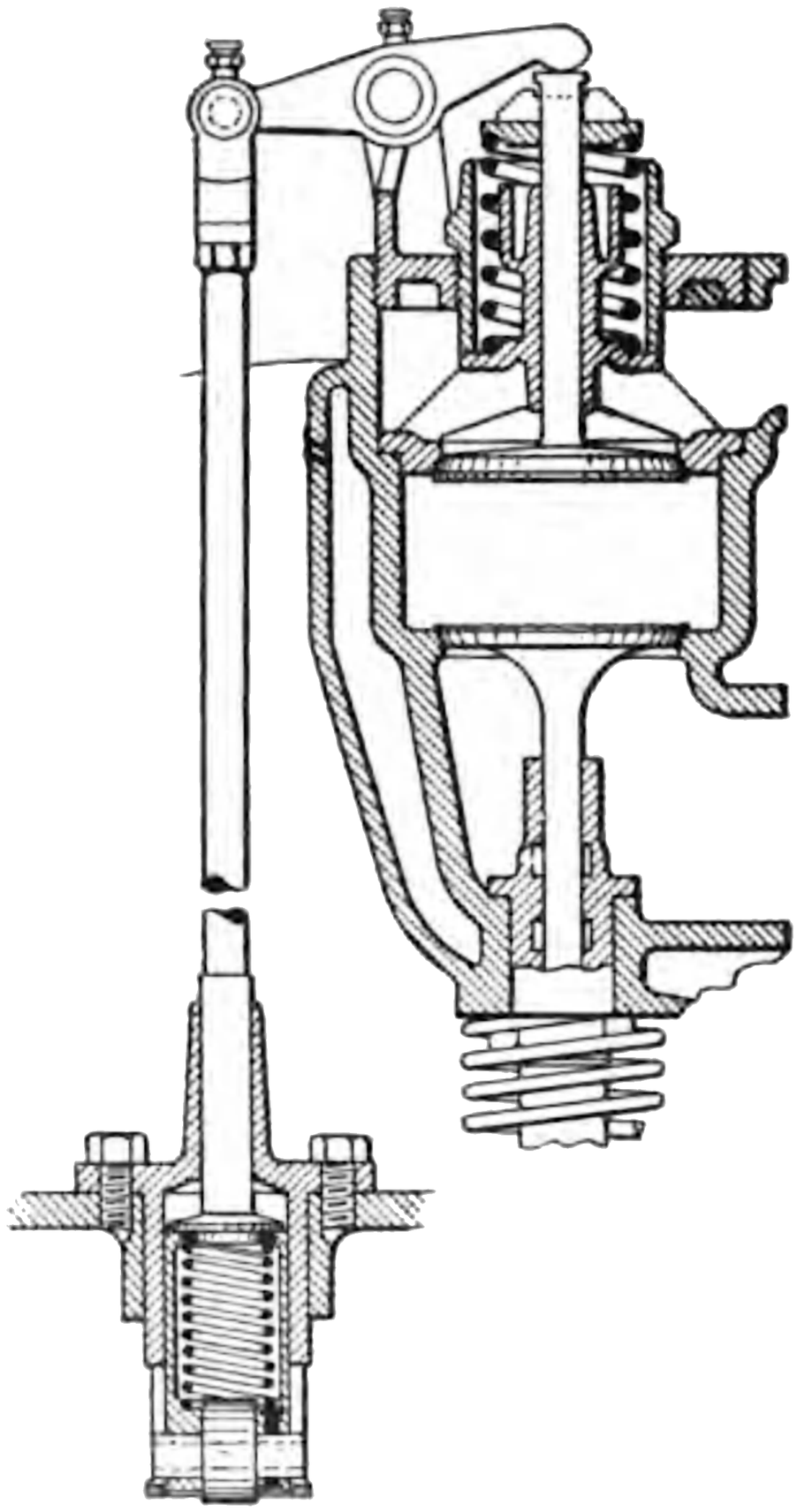

Fig. 115. Section through Valves, Columbia Automobile Engine.

If the trouble is not with the igniter, it may be caused by leakage of the charge. To test this, the engine, if not too large, is pulled over by hand. The resistance to turning, on the compression stroke, should be very considerable. If the resistance is not great enough, the compressed charge is escaping. The leakage may be

Purchase full membership to immediately unlock this page

DELVE INTO FANTASY, MAGIC, MYTHOLOGY & FOLKLORE

Forgotten Books' Full Membership gives access to 797,885 ancient and modern, fiction and non-fiction books.

Continue

*Fair usage policy applies

SCHEDULE FOR LOCATION OF GASOLINE MOTOR TROUBLES

- he motor ll not run
  - Ignition in working order
    - Compression
      - Carbureter in working order
        - Ignition timing is incorrect.
        - Exhaust valve does not open.
        - Gasoline is too dense or contains water.
        - Gasoline tank is empty.
        - Gasoline feed-pipe is clogged.
      - Carbureter not in working order
        - Carbureter flooded—needle-valve needs grinding, or float is too heavy.
        - Too little gasoline—needle-valve setting bad, float is too light, feed-pipe or jet obstructed.
        - Balance lever broken.
    - No compres sion
      - Valve broken.
      - Valve-stem sticks.
      - Valve spring broken or too weak.
      - Cylinder cracked or worn.
      - Broken piston rings.
      - Slots in piston rings are in line.
      - Piston rings gummed (inject gasoline).
      - Leakage past valves (regrind them if corroded).
      - Valve-stems too long.
      - Valve timing incorrect.
      - Leakage past igniter (if make-and-break type).
  - Ignition not in working order
    - With bat-ter.es
      - No spark at end of plug
        - Spark at trembler
          - Voltage or amperage sufficient
            - Trembler screws loose.
            - Trembler stuck.
            - Leak between coil and spark-plug.
            - Broken secondary wire.
          - Voltage or amperage insufficient
            - Replace battery.
        - No spark at trembler
          - Batteries run down.
          - Leak in primary circuit.
          - Trembler dirty or too far from platinum point.
          - Timer misplaced.
      - Spark at end of spark-plug (unscrew it)
        - Broken spark-plug.
        - Dirty or moistened spark-plug.
        - Spark-plug points broken or too far apart.
        - Voltage too low for the conditions inside the cylinder.
    - With mag-neto
      - Spark at the spark-plug
        - Magneto out of time.
        - Wiring incorrect.
        - No contact (carelessness or broken wire).
        - Make and break badly set, or damaged.
        - Carbon brushes worn, or used up.
        - Distributor contacts bad.
        - Wiring incorrect.
        - Bad insulation of wipers or spark-plugs.
      - No spark at the spark-plug

e motor starts, but stops after a few revolutions

- Piston seizes from lack of lubrication or cooling water.
- Too much oil in crank-case.
- Water leaks into the cylinder from the jacket.
- Poor carburetion or stuck float.
- Exhaust clogged.

It happens not infrequently that a gas engine will make a few revolutions, and will then stop. Some of the causes for this are also indicated in the schedule.

The cylinder oil that is commonly used in steam engines cannot be used in gas engines, as it carbonizes at the high temperature of the explosion, and forms a deposit in the cylinder and on the exhaust valve. A special oil is used; and even this, if supplied in excess, causes a gradual accumulation of hard deposit in the cylinder, which must be cleared out occasionally. Apart from its interference with the action of the igniter and exhaust valve, this deposit is liable to cause premature ignition by being raised to incandescence.

Cold water must be kept circulating through the jackets whenever the engine is running, being started as soon as the cylinder warms up. A stoppage of this flow, even for a comparatively short time, is liable to have a disastrous effect upon the cylinder. A gradual accumulation of sediment may occur in the water-jacket, with a consequent reduction in its efficiency. On shutting down, it is always better to drain the jacket, which not only prevents the possibility of its freezing up in winter, but also tends to clear it of sediment. In general practice, however, the jackets are drained only in cold weather.

In the running of a gas engine—especially under light loads—very loud and alarming explosions are sometimes heard in the admission pipe or in the exhaust pipe. The *back-firing* in the admission pipe nearly always results from a leaky admission valve. The explosions in the exhaust, indicating as they do the presence of explosive gases in the exhaust pipe, are caused either by the use of a mixture which is too weak or by faulty ignition. If the mixture is too weak, the charge taken in just after an explosion may fail to ignite, because it is mixed with the products of the previous explosion, while the next charge taken in may explode because it does not mix with burned gas but with the weak charge in the clearance. The hot exhaust gases ignite the weak mixture which was rejected unburned to the exhaust at the previous cycle. If the ignition is imperfect, a good mixture may fail to explode and be exhausted, and may then be ignited in the exhaust pipe by the next exhaust of hot gases.

TONNEAUETTE, MODEL O.
Knox Automobile Company, Springfield, Mass.

Purchase full membership to immediately unlock this page

HISTORY

Tens of thousands of important historical sources, many previously unobtainable, are now available for the first time with a Forgotten Books Full Membership.

Unlimited Access
$8.99/month

Continue

*Fair usage policy applies

location, such frame being capable of sustaining the loads to be carried. In addition to the above features shown in Fig. 1, the running gear (see Fig. 2) includes *steering devices* (controlled by hand-wheel, shown at upper right), for altering the direction of move-

Fig. 2. Typical Chassis of a Motor-Car, Showing Running Gear and Power Plant. Nordyke & Marmon Company, Indianapolis, Ind.

ment of the vehicle; *equalizing mechanism* or *differentials* (generally housed, as shown at center of rear axle), for permitting one driving wheel to turn faster than the other when the machine is turning a curve; *change-speed devices* (ordinarily controlled by hand-lever, shown between front and rear wheels at right), for altering the speed

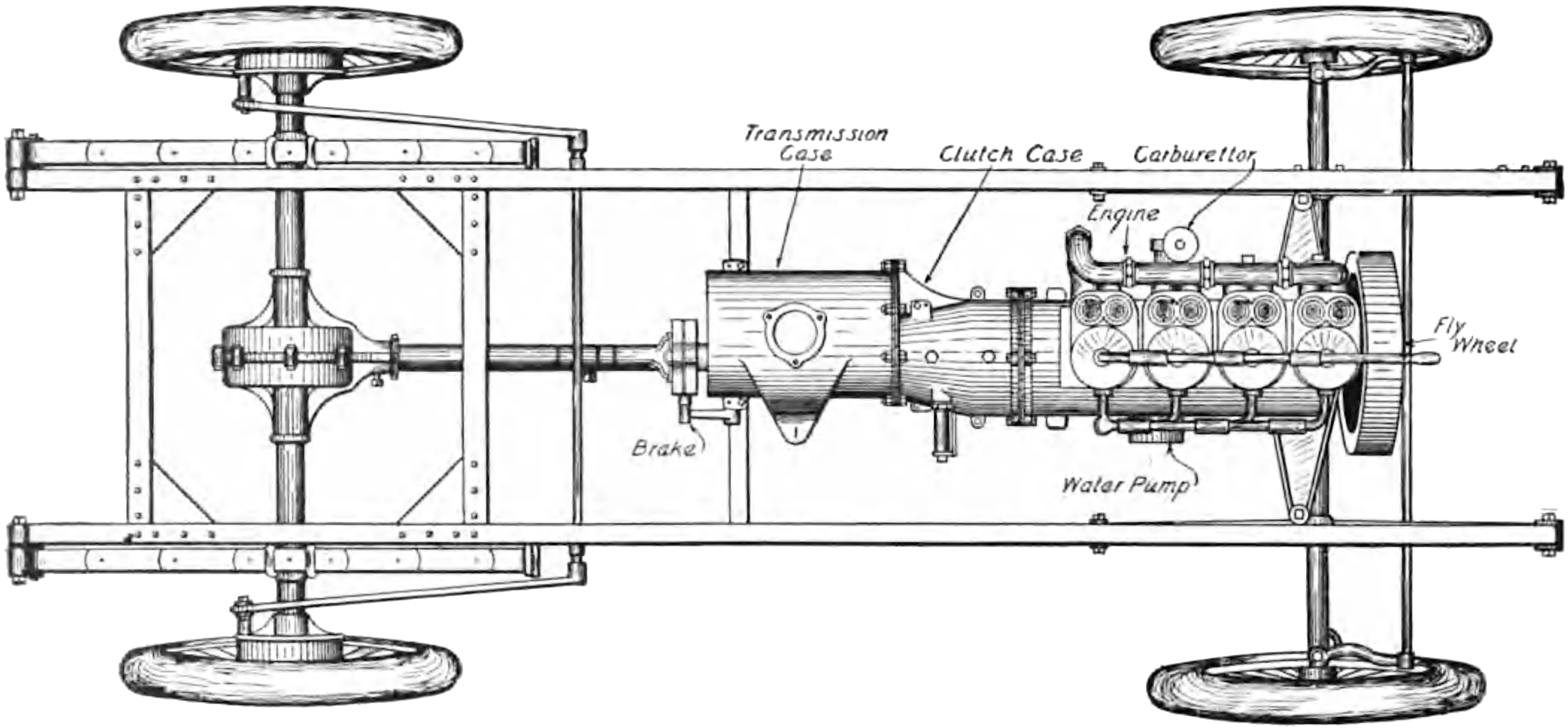

Fig. 3. Power Plant of a Gasoline-Driven Car.
Stevens-Duryea Company, Chicopee Falls, Mass.

of the vehicle while that of the engine may be left unchanged; and *brakes* (ordinarily operated by foot-levers, shown under steering wheel), for bringing the vehicle to a gradual or immediate stop.

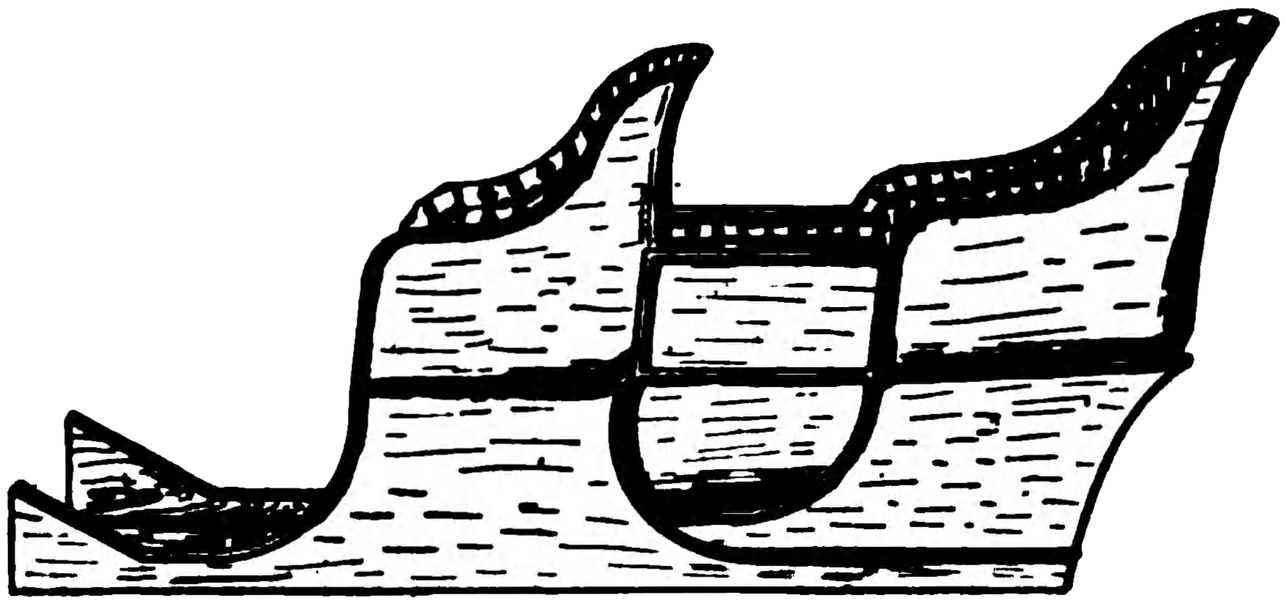

Fig. 4. Wood Body.

Power Plant. The power plant, in the case of the gasoline-driven car, consists of the *Engine, Fly-Wheel, Carbureter, Clutch, Transmission,* and *Water-Pump,* as shown in Fig. 3. In addition to these parts, the power plant of the gasoline-driven car includes: *Batteries, Spark-Coils, Spark-Plugs, Oiling*

Fig. 5. Component Parts of an Aluminum Body.
Nordyke & Marmon Company, Indianapolis, Ind.

Devices, and other features discussed in detail as to their operation under subsequent headings. The power plants of steam-driven and electrically driven cars are also described in detail in chapters devoted to these types.

Purchase full membership to immediately unlock this page

DELVE INTO FANTASY, MAGIC, MYTHOLOGY & FOLKLORE

Forgotten Books' Full Membership gives access to 797,885 ancient and modern, fiction and non-fiction books.

Continue

*Fair usage policy applies

largely eliminates the tendency to sag or settle. It must be remembered, from the very fact that the frame material is ductile enough to have permitted of its being pressed cold without cracking, that in the very nature of things it can have no real springiness, and repeated shocks and bounces will cause it gradually to settle. This settling will occur at the weakest part of the frame, and is usually not

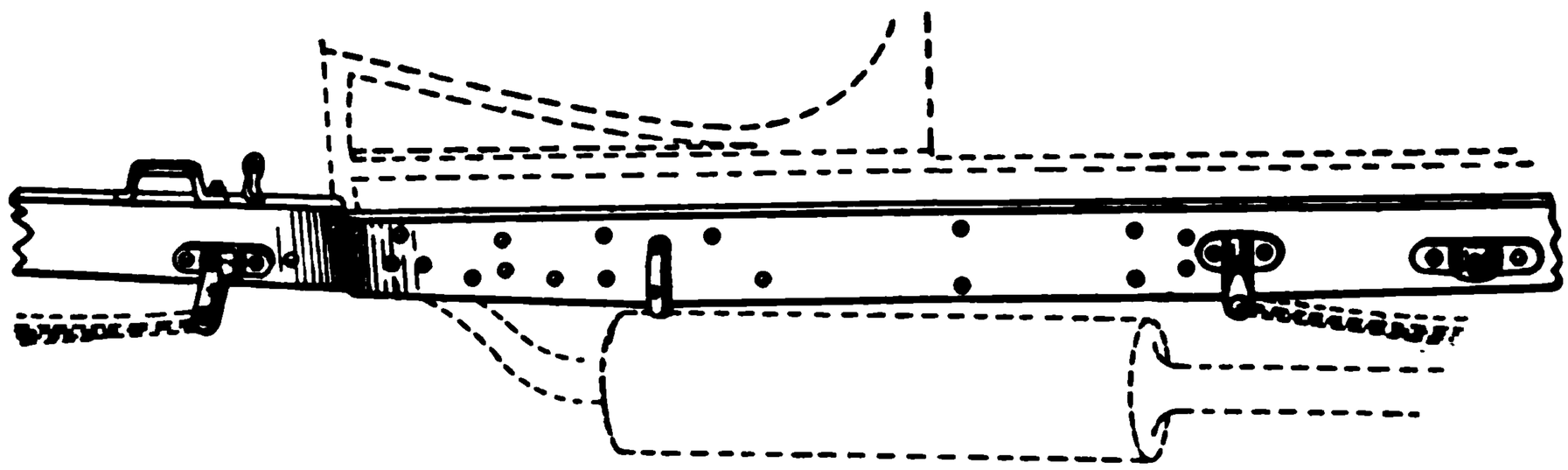

Fig. 7. Side Bar of Frame, Showing Excessive Riveting.

over one-eighth of an inch—hardly enough to be noticed with the eye; but it is enough to affect any mechanism that depends on the frame to maintain perfect alignment of parts. Troubles with bearings in engines and transmissions can often be traced to this source.

Theoretically the best material to resist this sagging tendency is steel, wood-filled. The trouble with wood filling, however, is

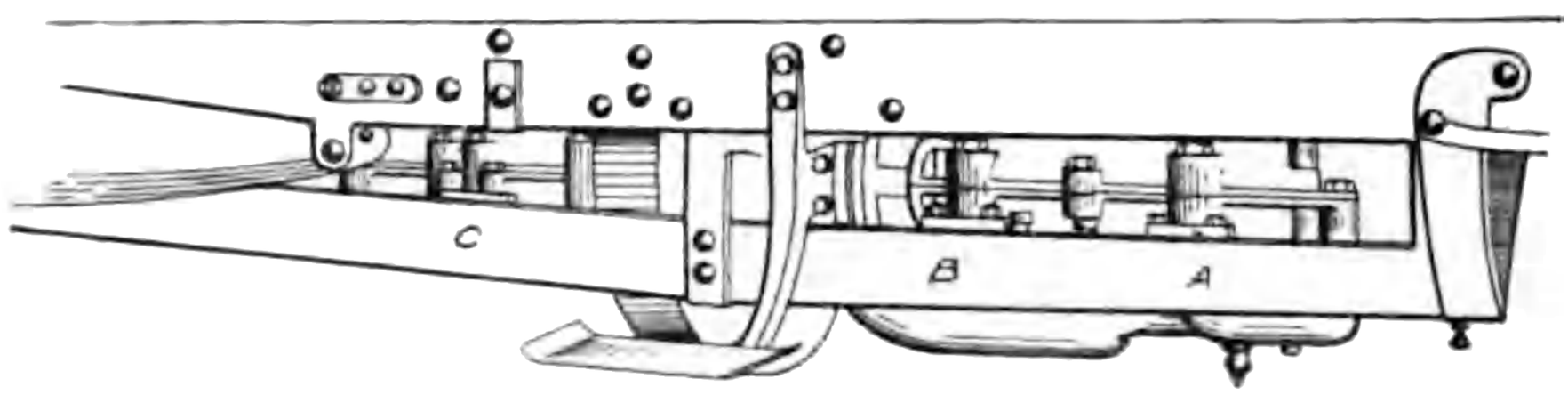

Fig. 8. Frame Weakened by Excessive Riveting in Parts Subjected to Heaviest Weight.

that hot riveting cannot be done, and cold riveting is likely to split the pressed-steel frame; so, in actual practice, the wood-filled frame has almost disappeared.

Fig. 7 shows a side bar of a typical four-cylinder car, in which altogether too many rivet-holes have been punched or drilled.

Fig. 8 shows a frame construction in which the strain tending to produce sagging has been allowed to come at points of the frame

which have already been weakened by rivet-holes. Both of these constructions are faulty, and should be avoided.

Fig. 9 shows a type of motor suspension which does away with the drop frame, and is designed for a minimum number of rivet-

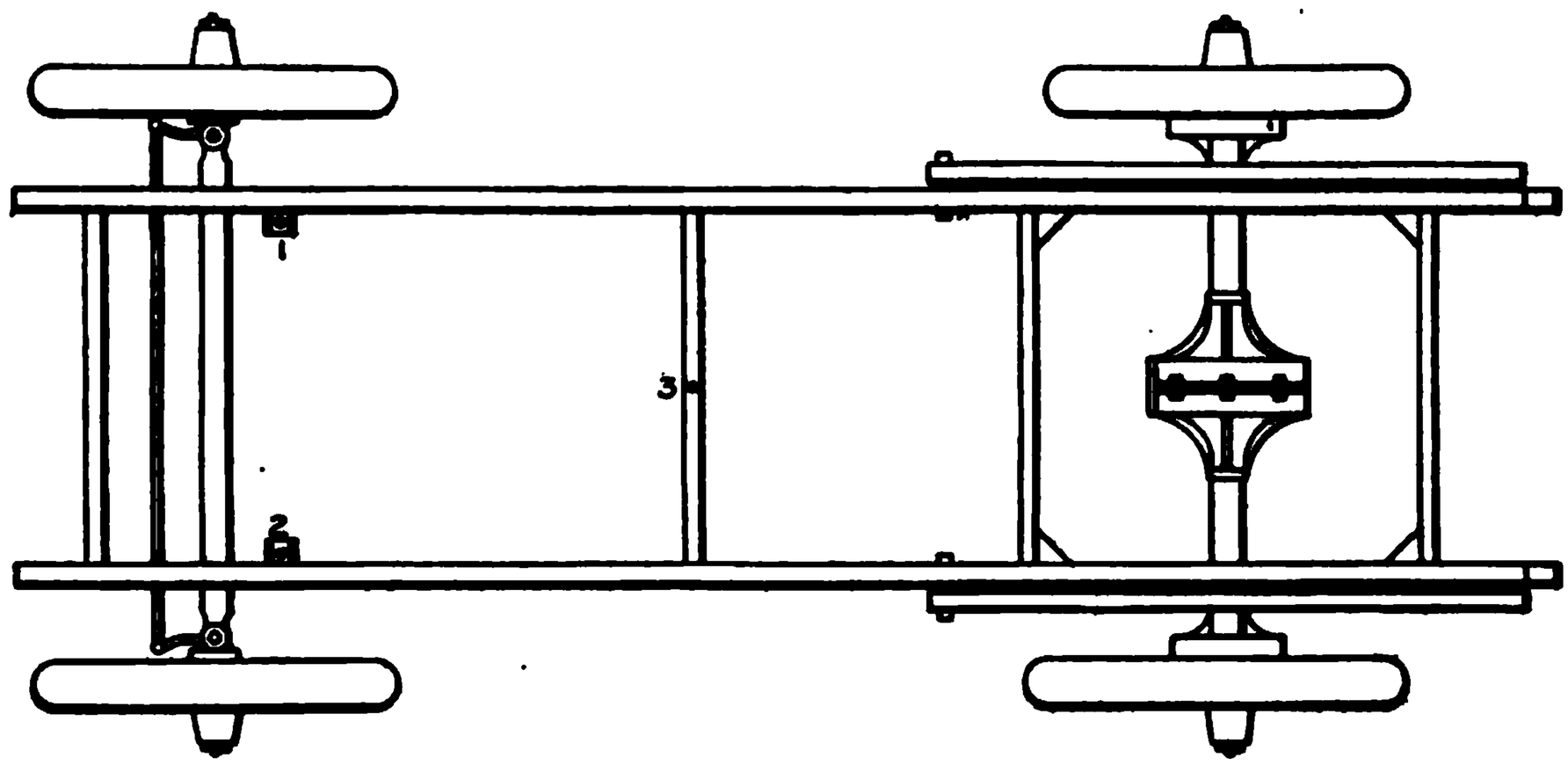

Fig. 9. Three-Point Motor Suspension.
Stevens-Duryea Company, Chicopee Falls, Mass.

holes. The motor frame is suspended at points 1, 2, and 3, points 1 and 2 being side lugs, and 3 being a cross-bar. This type of suspension is employed by the Stevens-Duryea Company of Chicopee Falls, Mass. It should be noted that the points of suspension are three. A three-point suspension of the motor is preferable to a four-point, for the reason that any lateral distortion produces an

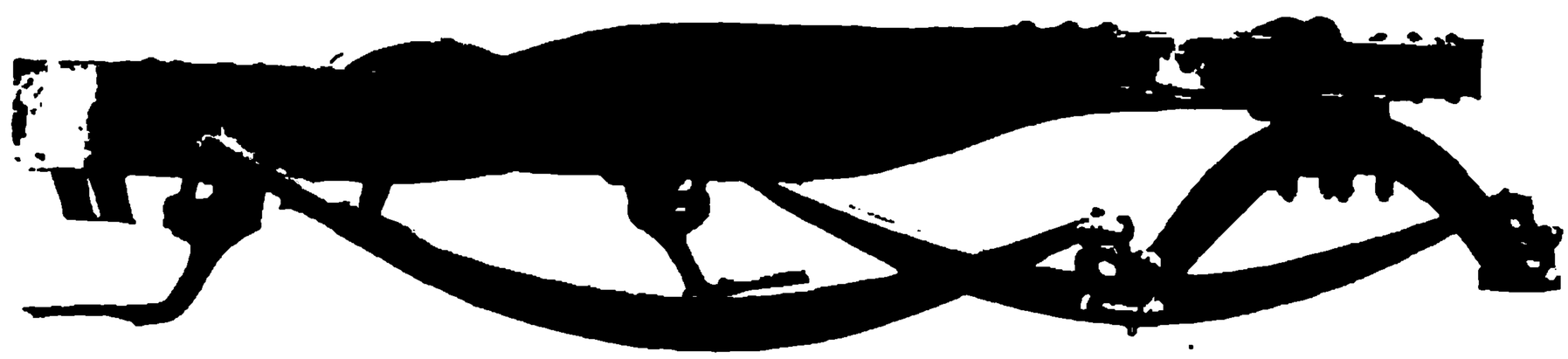

Fig. 10. Rear Spring Suspension.
Peerless Motor Car Company, Cleveland, Ohio.

undue strain at one of the four points in the latter type of suspension, while in a three-point suspension the strain is equally distributed.

Spring-Hangers. The spring-hangers are drop forgings closely fitting into the ends of the pressed-steel frame, as seen in Fig. 6. They must be of sufficient length not to unduly strain the frame, and must be hot-riveted to the frame.

Springs. Intermediate between the frame and the axles are the springs. These are attached to the spring-hangers by means of *spring links*, and rest on surfaces called *spring seats* on the axles.

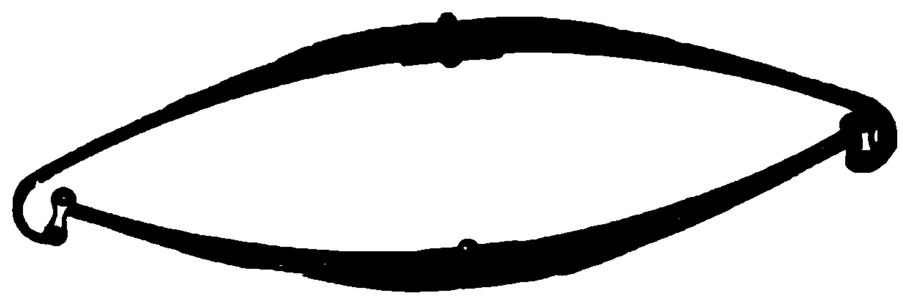

Fig. 11. Full Elliptical Spring.
Reliance Motor Car Company, Detroit, Mich.

Fig. 10 shows the rear spring suspension employed by the Peerless Motor Car Company of Cleveland, Ohio. The springs shown are what are designated as *semi-elliptical springs*, with eight leaves. Formerly springs were used as short as 34 inches, but the tendency is toward longer springs, 44

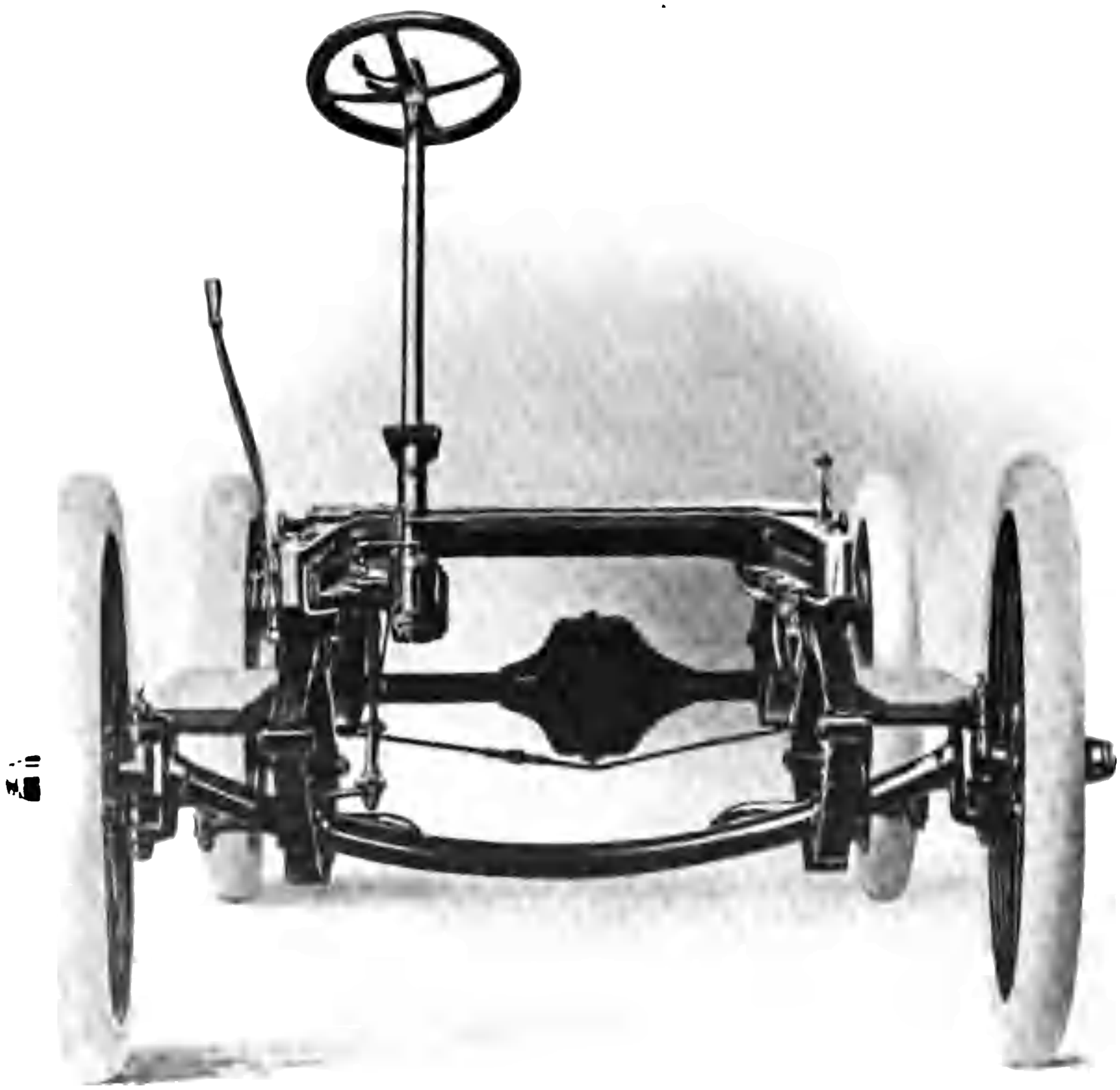

Fig. 12. Front View, Franklin Spring Suspension, Showing Tubular Front Axle.
H. H. Franklin Manufacturing Company, Syracuse, N. Y.

inches being not an uncommon length. Fig. 10 also illustrates what is called the *drop* type of frame construction, the frame drop-

Purchase full membership to immediately unlock this page

HISTORY

Tens of thousands of important historical sources, many previously unobtainable, are now available for the first time with a Forgotten Books Full Membership.

Unlimited Access
$8.99/month

Continue

*Fair usage policy applies

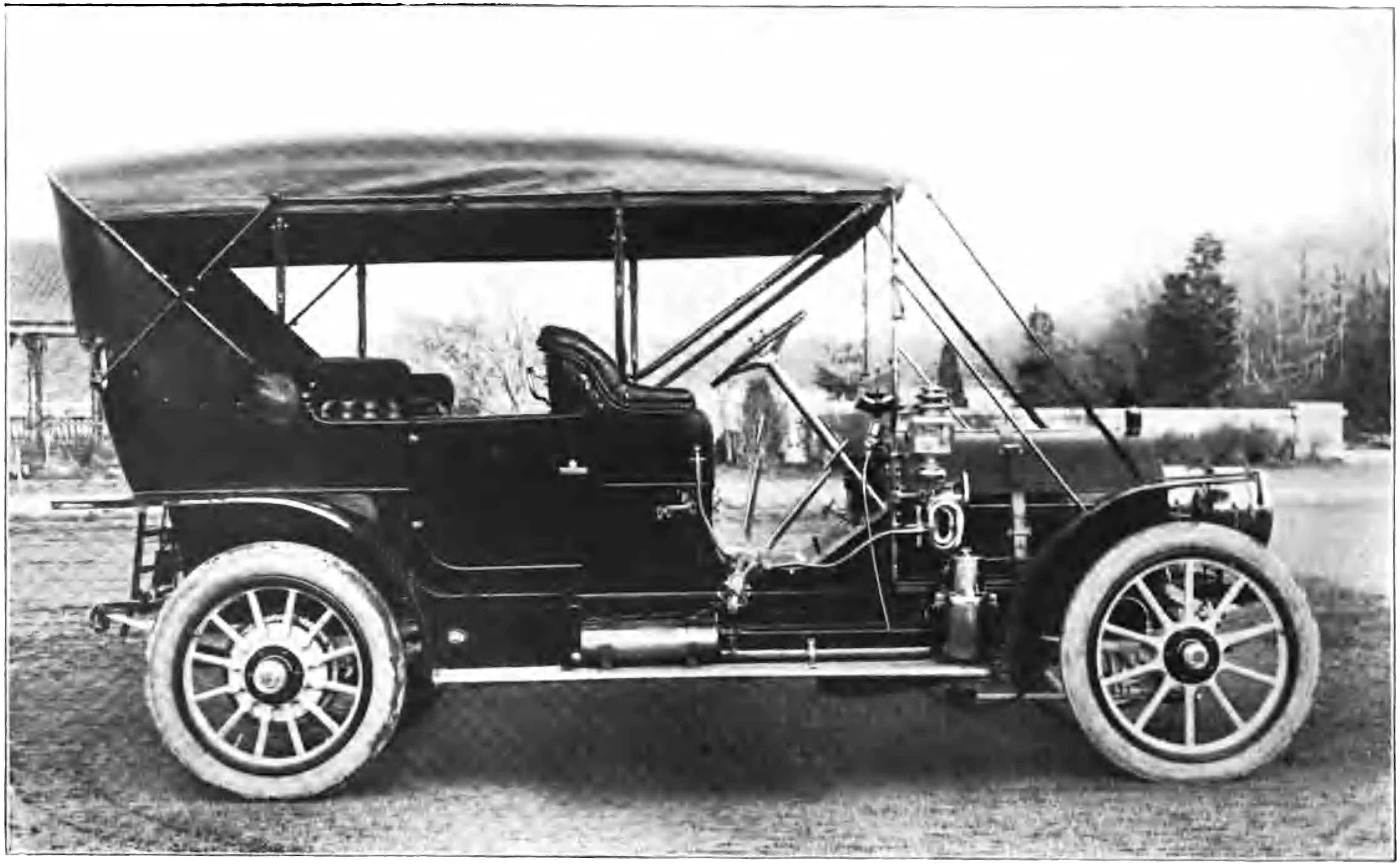

THOMAS FLYER.
E. R. Thomas Motor Company, Buffalo, N. Y.

ping down between the wheels so as to carry the passengers nearer the ground and thus lower the center of gravity of the loaded car.

Fig. 11 shows a *full elliptic spring*, with five leaves. This type of spring is used on the lighter types of cars, but has been largely superseded by the semi-elliptical in heavier cars.

Front Axles. Front axles have developed from the solid type with steering yoke part of the same forging, to the tubular type with drop center and with the steering yoke drop-forged and brazed onto

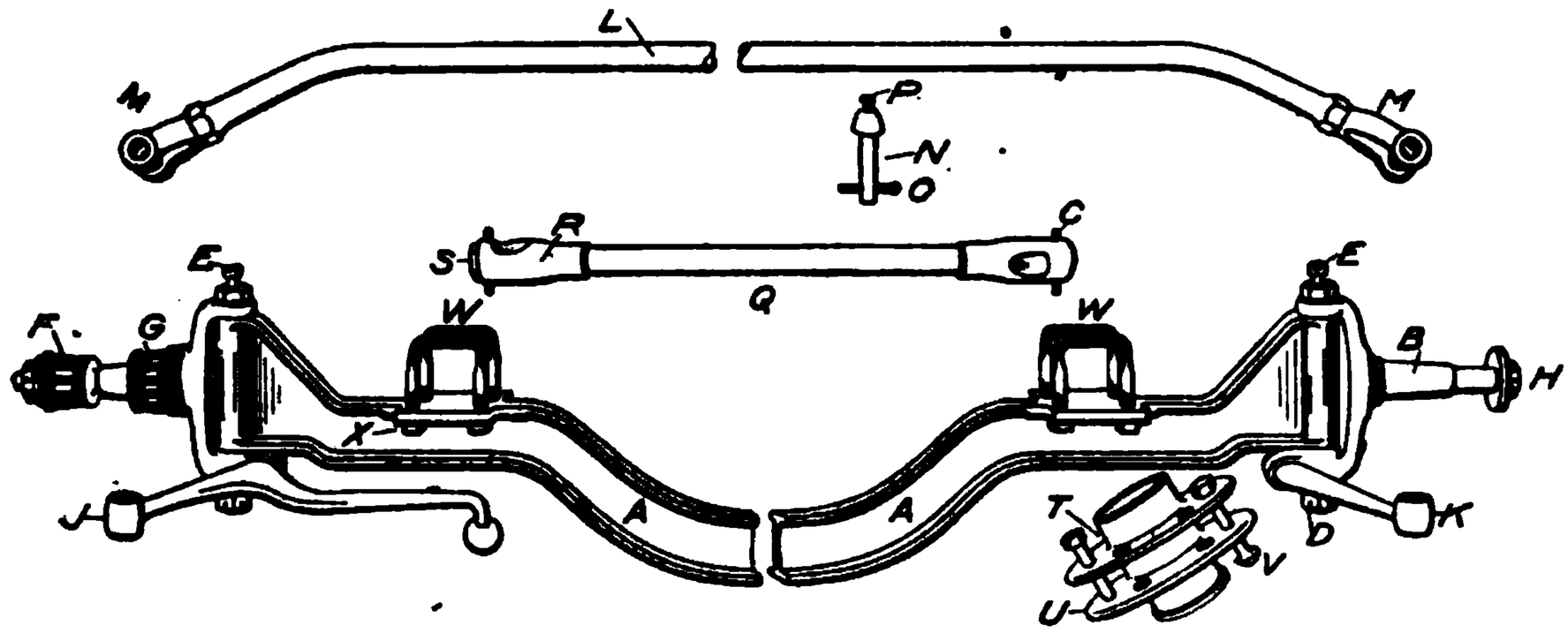

Fig. 13. I-Beam Type of Front Axle, with Parts Making Up Front-Axle System, as Used in Frayer-Miller Cars.
A—Axle; *B*—Knuckle; *C*—Pins; *D*—Nuts; *E*—Oiler; *F*, *G*—Roller Bearings (Timken); *H*—Nut; *J*, *K*—Steering Arms; *L*—Cross-Rod; *M*—Yokes; *N*—Pins; *O*—Cotters; *P*—Oiler; *Q*—Fore and Aft Connecting Tube; *R*—Ball Joint; *S*—Nut; *T*—Front Hub; U—Flange; *V*—Bolts; *W*—Spring Clips; *X*—Nuts.
Oscar Lear Automobile Company, Columbus, Ohio.

the main axle tube The tubes employed are seamless, of 2 to 2½ inches diameter, with ¼-inch walls. However, the uncertainty of workmanship in connection with brazing has resulted in a tendency toward the I-beam type of front axle, in which the steering yoke is part of the same piece, as is also the spring seat.

Fig. 12 shows the tubular type of front axle as employed in the Franklin motor-car. Fig. 13 shows the I-beam type of axle, together with a list of detail parts which go to make up the assembled front axle, as used in the Frayer-Miller car.

Rear Axles. Rear axles are mostly of the *live* or *rotating* type. A few cars which use the double-chain drive employ a *non-rotating* or *dead* rear axle—that is, one on which the wheels turn, while the axle itself does not turn with the wheels. This type of axle is considerably used on commercial trucks.

For touring cars and passenger cars generally, the tendency in America has been towards the *live* axle, usually made in halves, each

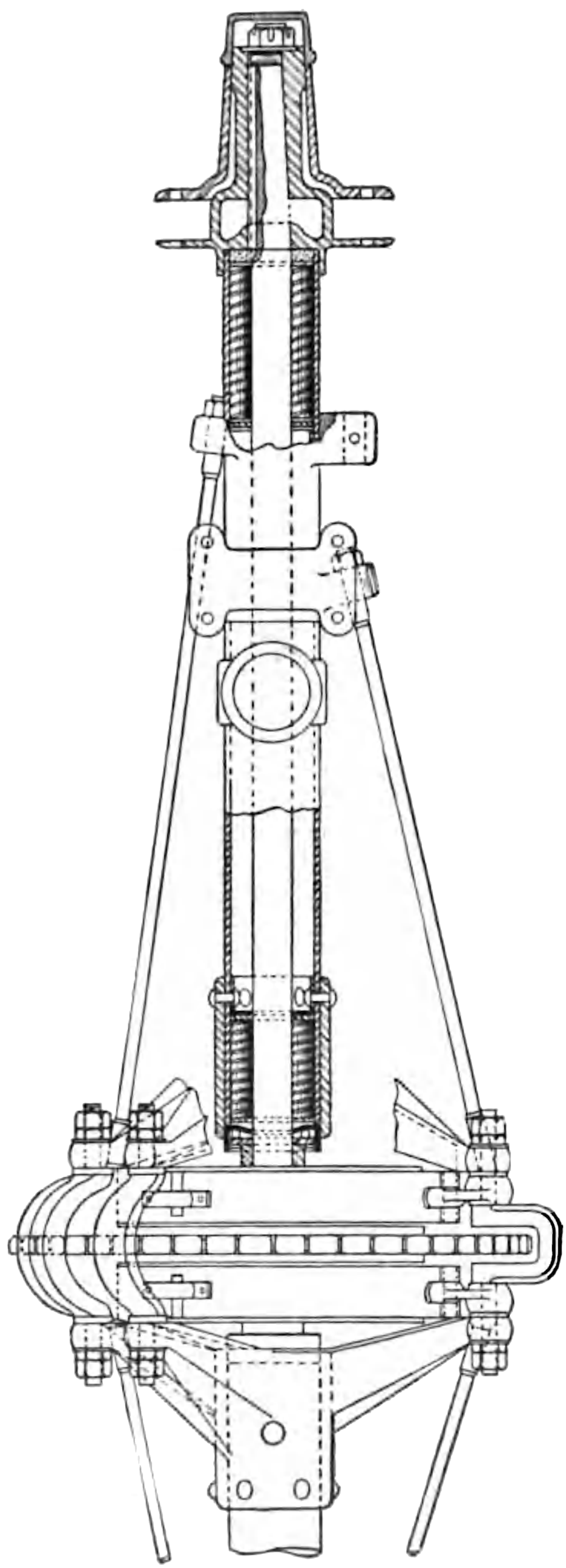

Fig. 14. Live Rear Axle, Halves Meeting at Differential, Chain-Driven, as Used in Cadillac Automobile, Detroit, Mich. Hyatt Roller Bearing Company, Harrison, N. J.

half driven from a centrally located differential gear set. The construction and operation of differential gears is more fully taken up later under the heading of "Power Transmission."

Fig. 14 shows a *chain-driven* rear axle, the axle being in two halves. The rear wheels are keyed onto each half of the live axle, which rotates in roller bearings. The illustration shows the axle used by the Cadillac Automobile Company.

Fig. 15 shows the axle construction used on Reo cars.

Fig. 16 shows a *shaft-drive* rear axle of the live type, the wheels rotating with the axle.

Fig. 17 shows what is known as the *clutch-drive* or *floating* type of live axle. In this type the rear wheels do not rotate on and with the live axle-halves, but, as seen in the cut, they rotate on the dead

Purchase full membership to immediately unlock this page

DELVE INTO FANTASY, MAGIC, MYTHOLOGY & FOLKLORE

Forgotten Books' Full Membership gives access to 797,885 ancient and modern, fiction and non-fiction books.

Continue

*Fair usage policy applies

outer casings of the axle, without being connected to it except through the dog-clutch, which is kept in position by the hub-cap. In this type the axle tubes carry the weight of the car and of the wheels.

Rear-axle tubing should be not less than 2 inches in diameter; some cars use as large as 3 inches in diameter. The tubing should be reinforced by a strut, as shown in the cuts.

Steering Yoke, Neck, and Knuckle. The front axle terminates

Fig. 18. Steering Yoke, Neck, and Knuckle. Packard Motor Car Company, Detroit, Mich.

at either end in the *steering yoke.* In the tubular type of front axle, the steering yokes are usually brazed into the axle tube. The I-beam type of front axle usually has the yoke part of the I-beam piece, thus making the axle and steering yoke all in one piece, securing a better construction.

Fig. 18 shows the tubular type of axle, together with steering yoke, neck, and knuckle, as employed by the Packard Motor Car Company, of Detroit, Mich. The yoke, it will be seen, carries the

vertical steering spindle or *neck*. The latter, in turn, supports the wheel, and is also attached to the *steering knuckle*.

Fig. 19 shows a detail of steering knuckle as used in the Rambler car built by Thos. B. Jeffery & Company, Kenosha, Wis. The load is carried on the thrust-bearing shown in section under the upper arm of the steering yoke. This bearing comprises two hardened tool-steel plates and a row of thirteen $\frac{3}{8}$-inch steel balls. The center pin is tapered from $1\frac{1}{8}$ inches at the top to $\frac{7}{8}$ inch at the bottom. At each end is a nut bearing against the yoke, whereby the position of the taper pin within this bearing in the knuckle may be adjusted. To adjust it, the nut at the upper end must be loosened, and the one at the lower end tightened. This will draw the taper downward into its seat in the knuckle. If too tight, release the lower nut and screw down the upper one. When properly adjusted, tighten both nuts.

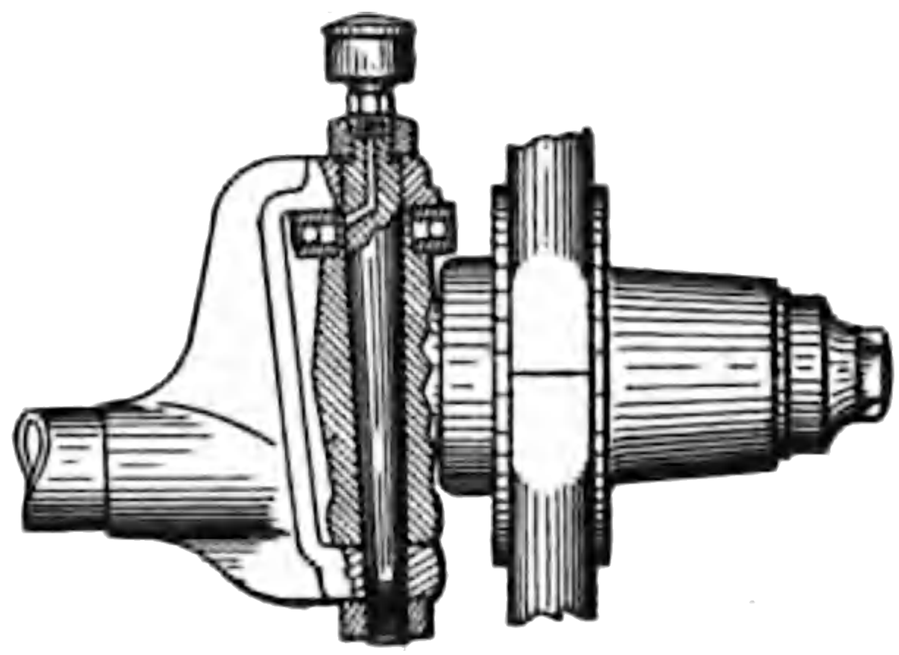

Fig. 19. Detail of Steering Knuckle, Rambler Car. Thomas B. Jeffery & Co., Kenosha, Wis.

The ball thrust-bearing is usually packed in hard grease, and will require very little attention. The center pin is provided with an

Fig. 20. Steering Mechanism of the Cartercar. Motor Car Company, Detroit, Mich.

oil-cup which feeds through a vent as indicated, into the bearing of the pin.

Steering Connections. The two steering knuckles are connected by a rod known as the *transverse rod* or *cross-rod*, so that they will move in unison. This rod is shown in Fig. 20, as used in the Cartercar, built by the Motor Car Company, Detroit, Mich.

The vertical steering spindle or neck, in addition to carrying the wheel bearing, in the case of the right-hand spindle is usually made so

as to form also in one piece the steering arm. This construction is shown in Fig. 21, as used by the Timken Roller Bearing Axle Company, Canton, Ohio. It will be noticed that the steering arm terminates in a round ball. This ball is part of a ball-and-socket joint

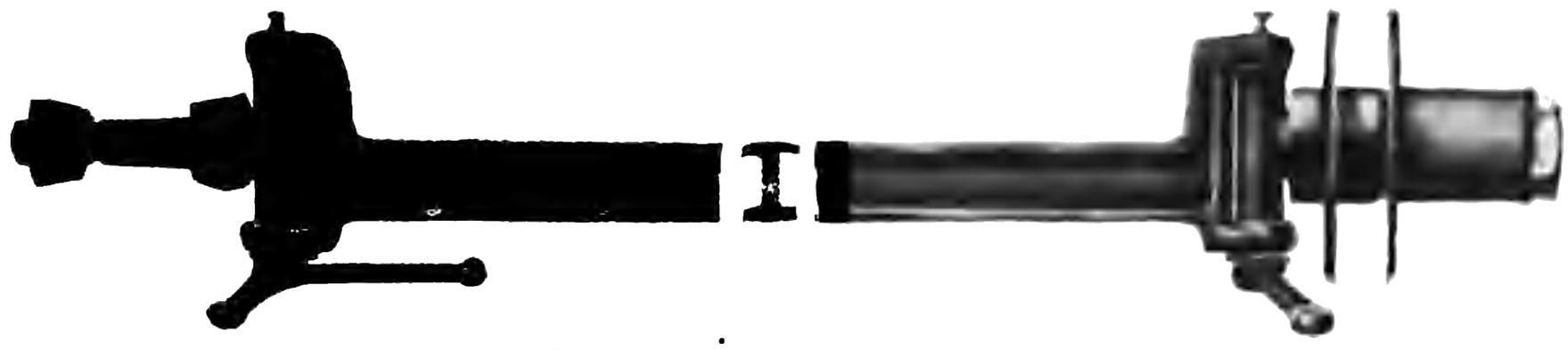

Fig. 21. Steering Arm, Showing Ball Joint.
Timken Roller Bearing Axle Company, Canton, Ohio.

connecting the steering arm, through a reach-rod, to the sector shaft of the steering column.

Fig. 22 shows the reach-rod as used in the Oldsmobile, made by the Olds Motor Works, Lansing, Mich. The socket part of the ball-and-socket joint is usually composed of two hollowed-out bronze blocks adjustable for wear.

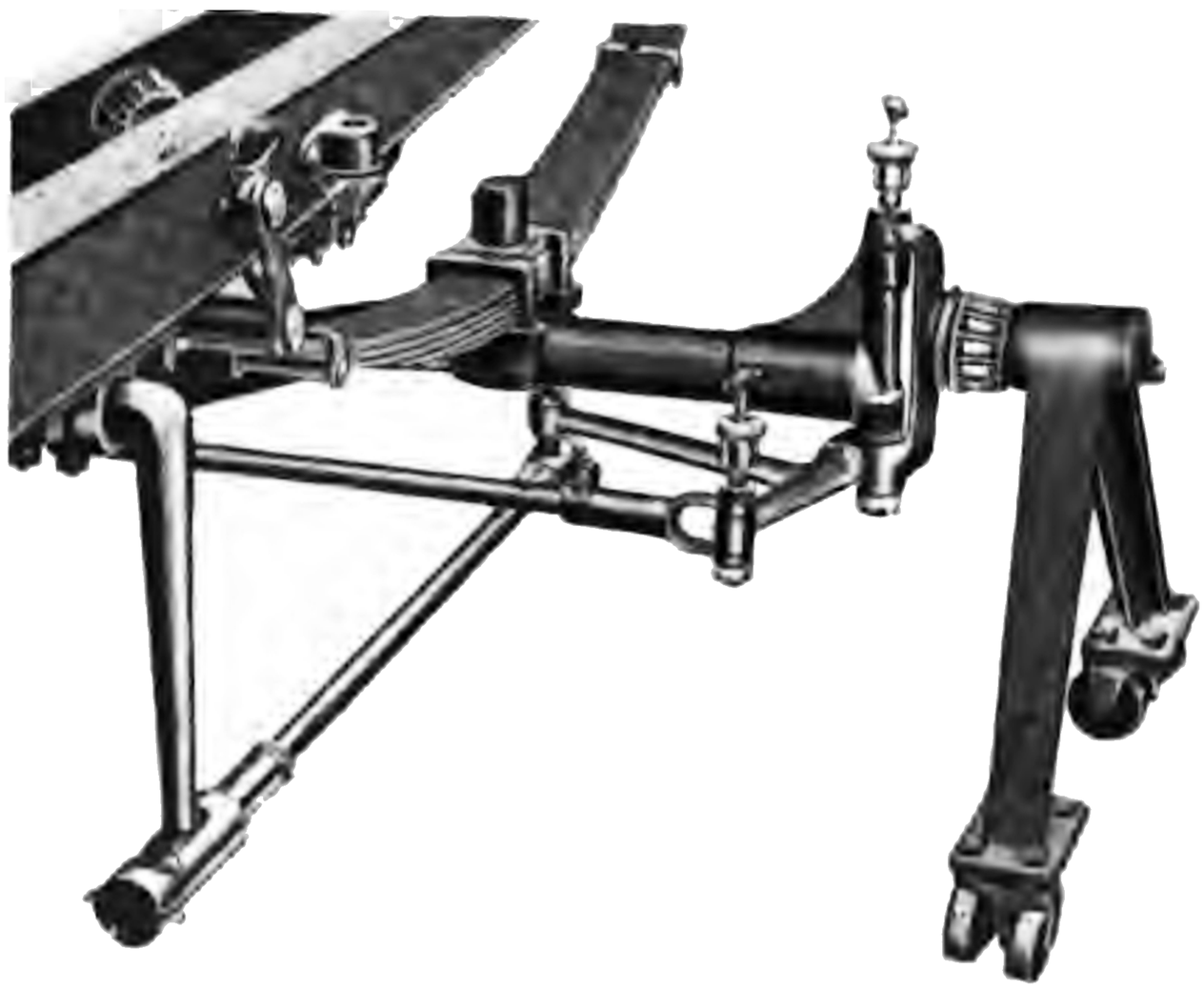

Fig. 22. Steering Connections of Oldsmobile.
Olds Motor Works, Lansing, Mich.

Steering Gear. Cars are almost universally steered by means of a large-diameter hand-wheel on the top of a considerably inclined tubular steering post or column. The steering wheel is usually made of a solid three-arm brass ring, covered with black walnut or cherry and given a natural wood finish. The steering column is made of heavy steel tubing with brass tube outside, the outer casing serving for a standard or support. The innermost tube is the one usually used for steering purposes. Concentric with the steering tube, and surrounding it, there are frequently placed other tubes

Purchase full membership to immediately unlock this page

HISTORY

Tens of thousands of important historical sources, many previously unobtainable, are now available for the first time with a Forgotten Books Full Membership.

Unlimited Access
$8.99/month

Continue

*Fair usage policy applies

the gears are perfectly cut, truly adjusted, and made of best material, there should be no perceptible wear. In the gearing system shown in the illustration, the worm is located at the base of the steering column proper. When the hand-wheel is turned, this turns a gear. A shaft is forged with this gear, to which is attached an arm operating the connecting-rod to the steering knuckles. Around the shaft, where it protrudes through the gear casing, is an eccentric bushing graduated by thirty-seconds of an inch, which may be moved to take up any lost motion in the steering wheel. Moving this bushing so that the widest part is away from the steering column, forces the gear into closer mesh with the worm. Moving this bushing a quarter of an inch at the most, should be enough to take up any wear. Should any of the teeth become worn, disconnect the arm from gear to connecting-rod, and five complete turns of the steering hand-wheel will give a new set of teeth on the gear. Thrust-bearings with $\frac{3}{8}$-inch balls are placed above and below the gear on the steering column, and are self-seating; and the worm is adjusted for end play by screwing down an adjusting nut at top of casing.

Fig. 24. Detail of Nut and Bell-Crank in Screw and Nut Type of Steering Gear.
Knox Automobile Company, Springfield, Mass.

The more usual form is to use simply a sector of a gear, instead of a whole gear. This type of construction is shown in Fig. 26, as used by the Corbin Motor Vehicle Corporation, of New Britain, Conn. The form shown is a worm and sector cut by the Hindley patented process. By this process, every tooth in the worm is in contact with, and for the full width of, the sector face. The steering case is of Parsons manganese bronze, and all minor parts of the steering system are made of high-class steel forgings.

THE POWER PLANT

The power plant of an automobile includes the prime mover and all the accessories necessary to start it and keep it in continuous motion. In the case of the electrically driven automobile, the power plant includes the batteries, rheostat, motor, and other details which will be described under the heading of Electrically Driven Cars. In the case of steam-propelled automobiles, the power plant includes the boiler, engine, heating outfit, and accessories as de-

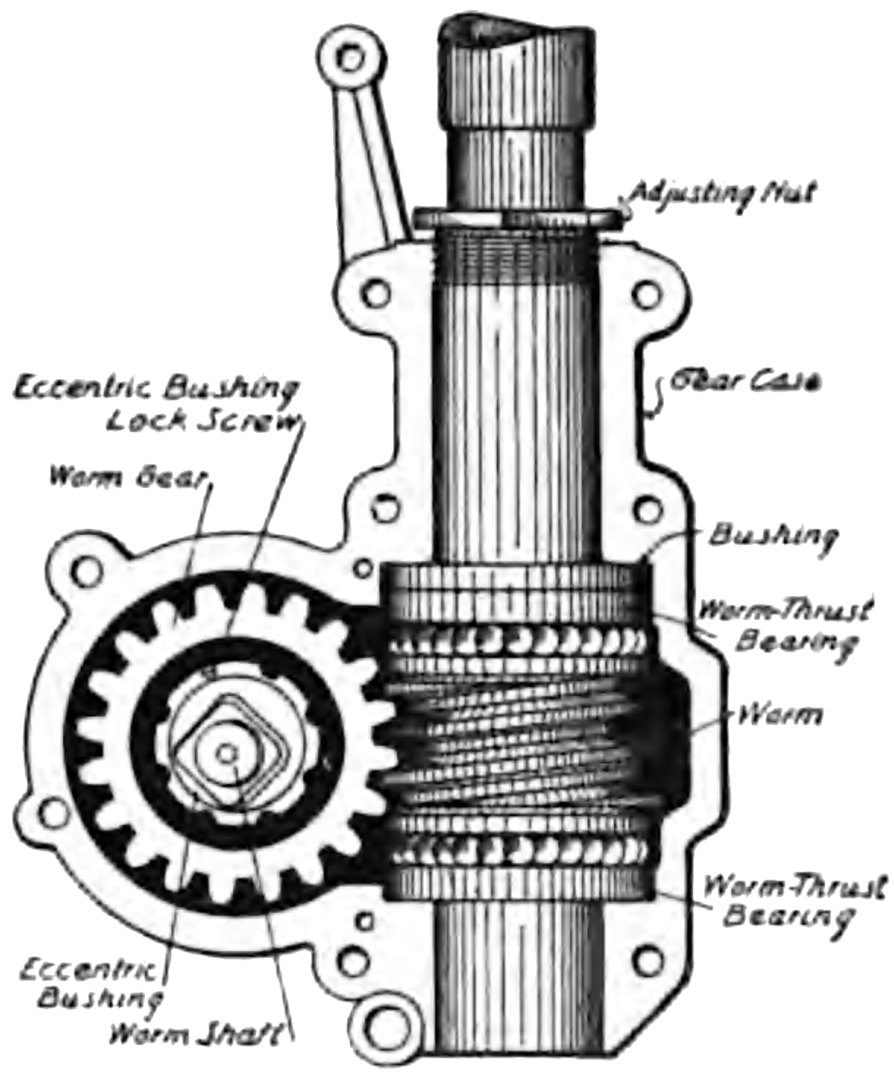

Fig. 25. Worm-and-Gear Type of Steering Gear.
Peerless Motor Car Company, Cleveland, Ohio.

Fig. 26. Worm and Sector Type of Steering Gear.
Corbin Motor Vehicle Corporation, New Britain, Conn.

scribed under the heading of Steam-Driven Cars. In the case of the gasoline-driven car, the power plant naturally groups itself as follows:

1. The engine proper, consisting of the reciprocating parts, the rotating parts, the cylinders, the crank-case, and the valves.
2. The fuel system, consisting of the gasoline tank and its connections through the carbureter to and from the engine.
3. The ignition system, consisting of the batteries, the spark-coils, the magneto or dynamo, the commutator, and the spark-plugs.
4. The cooling system, consisting of the fan, and, in water-cooled engines, also of the water tank, the water pump or siphon, the radiator, and interconnecting parts.
5. The lubricating system of the motor.

The Gas-Engine Cycle. The gas-engine cycle consists of four distinct steps—namely:

1. Admission of the charge of explosive fuel.
2. The compression of this charge.
3. The ignition or explosion of this charge.
4. Exhaust or expulsion of the burnt charge.

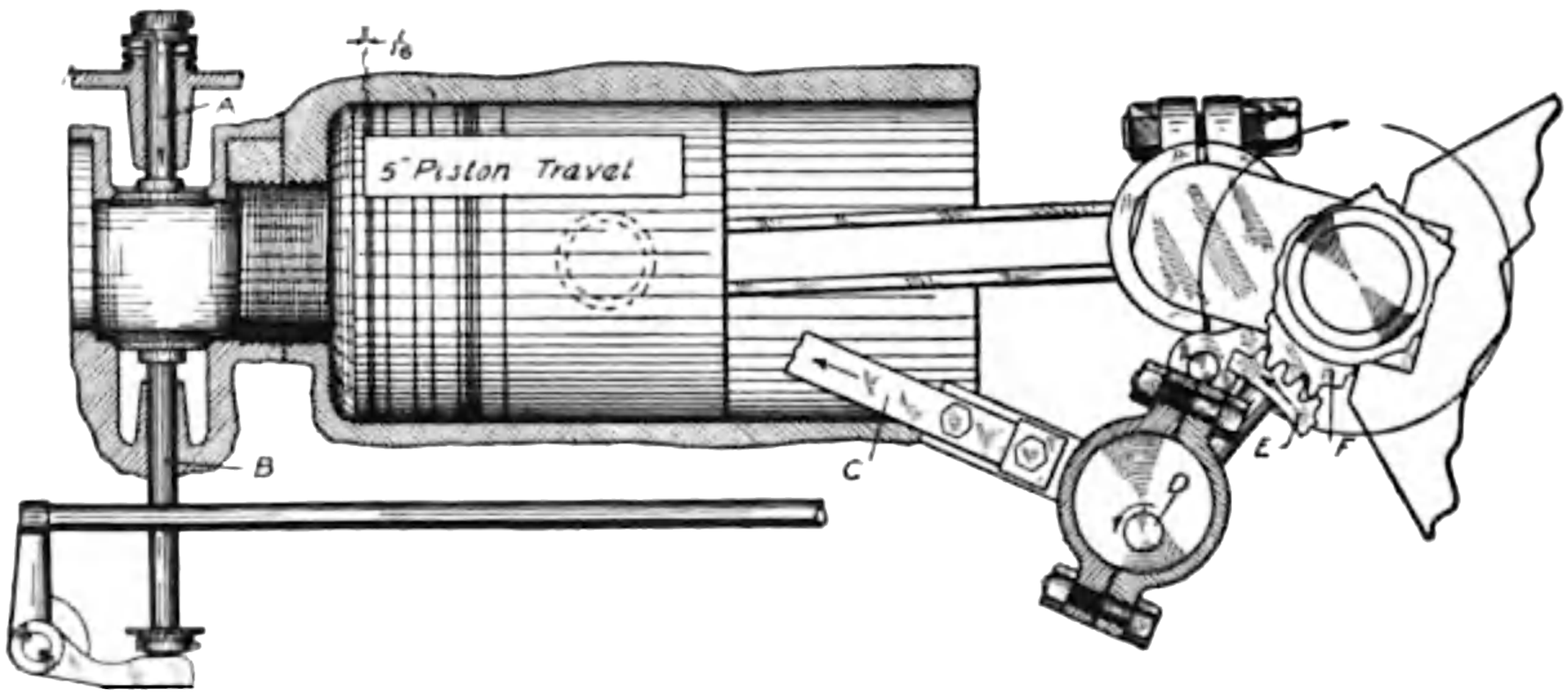

Fig. 27. Beginning of Suction or First Stroke in a Four-Cycle Engine. Cadillac Motor Car Company, Detroit, Mich.

If the complete process as above requires four strokes of the piston-rod in any one cylinder, the engine is designated as a *four-cycle engine*, although a more exact designation would be to call it a *four-stroke*

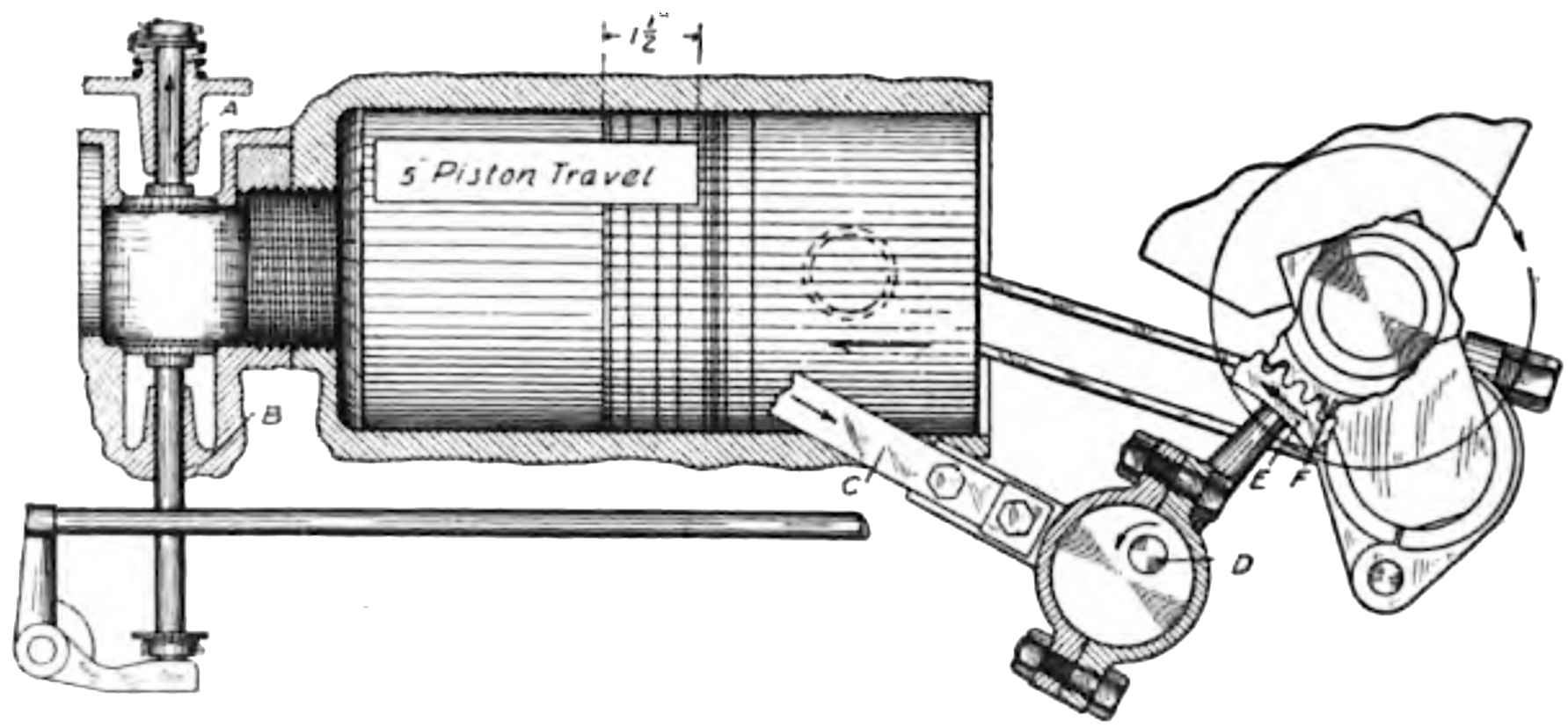

Fig. 28. Beginning of Second or Compression Stroke in a Four-Cycle Engine. Cadillac Motor Car Company, Detroit, Mich.

cycle. If the complete process is accomplished in two strokes of the piston, the engine is designated as a *two-cycle engine.*

Figs. 27, 28, 29, and 30 show the positions of piston and valves during these four steps, as they take place in the Cadillac single-cylinder four-cycle engine.

Purchase full membership to immediately unlock this page

DELVE INTO FANTASY, MAGIC, MYTHOLOGY & FOLKLORE

Forgotten Books' Full Membership gives access to 797,885 ancient and modern, fiction and non-fiction books.

Continue

*Fair usage policy applies

During the fourth or exhaust stroke, the gases are expelled from the cylinder through the valve *B*. The exhaust valve *B* is operated by the cam *I*, which pushes the exhaust rocker arm *J* and lifts the exhaust valve *B*.

Fig. 30 shows the position when the exhaust valve *B* has just closed $\frac{1}{32}$ inch of the stroke past dead center. The inlet valve *A* will open $\frac{1}{32}$ inch later, admitting new vapor, as in Fig. 27.

Two-Cycle Engines. In two-cycle engines the crank-case is used to admit the charge while the piston is on the upward stroke.

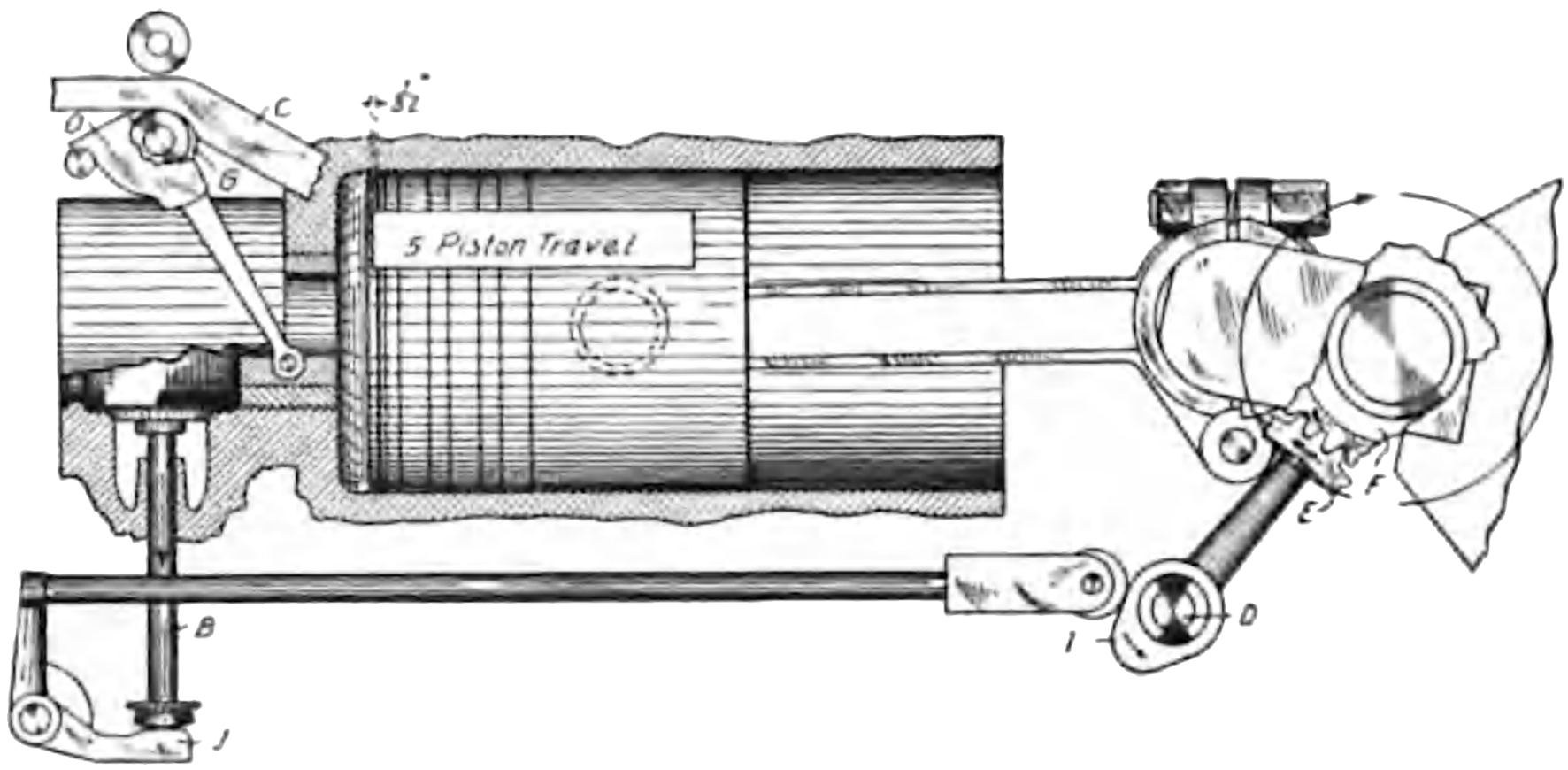

Fig. 30. End of Fourth or Exhaust Stroke in a Four-Cycle Engine.
Cadillac Motor Car Company, Detroit, Mich.

On the working or downward stroke of the piston, the vapor in the crank-case is forced through a by-pass, by the descending piston, this by-pass admitting it into the upper part of the cylinder, where it is compressed into small volume and ignited at the proper time.

In the two-cycle engine the process of exhausting the burnt gases and admitting the new charge are both performed during a single downward stroke, the exhaust port being uncovered first by the piston and allowing the greater part of the burnt gases to escape before the inlet port is opened. Hence, in the two-cycle engine, an impulse is received with each revolution of the fly-wheel and main shaft; in the four-cycle engine an impulse is received every fourth stroke or every other revolution of the fly-wheel and crank-shaft.

The two-cycle engine offers strong talking points, since all mechanically operated valves are replaced by mere port-holes, which

results in greater mechanical efficiency. Moreover, the more frequent working impulses should result in a constant torque and much smoother running. Two-cycle engines have been in use quite generally on motor-boats. The engines of the two-cycle type built for marine work have always shown considerable irregularity in running; and it has been the general impression that the operations of charging, compressing, firing, and exhausting cannot be properly accomplished during one revolution. However, it may be that, just as the air-cooled engine is gaining greatly in favor, though several years ago not considered equal to the water-cooled type, so a similar change in favor of the two-cycle engine may be brought about as this type of engine is perfected. There are several cars now on the market, notable among them being the Elmore and the Jewel, which are showing up very favorably with two-cycle engines.

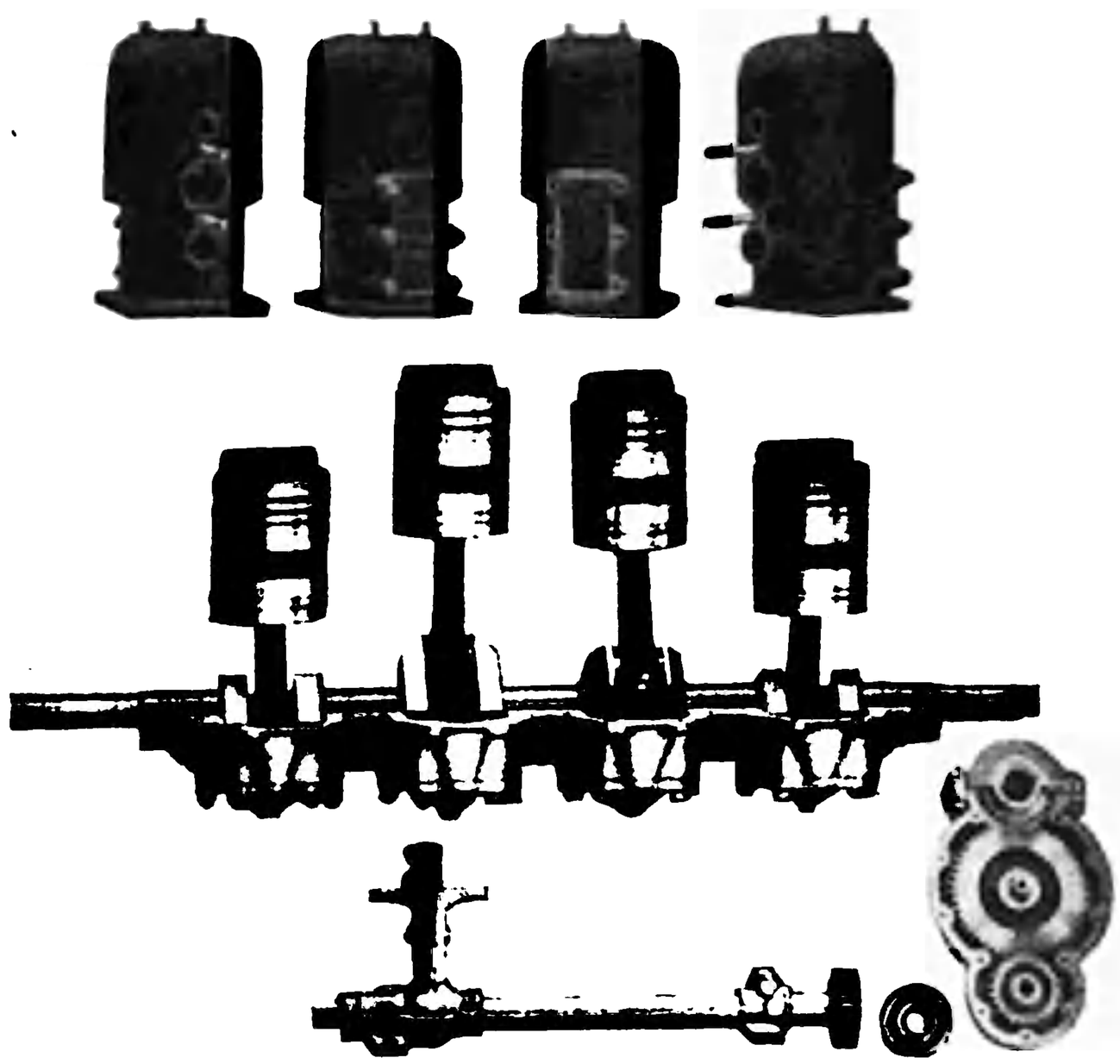

Fig. 31. Working Parts of Elmore 4-Cylinder 2-Cycle Motor, Showing Small Number of Parts. Elmore Manufacturing Company, Clyde, Ohio.

Fig. 31 shows the working parts of the Elmore valveless two-cycle engine. Each cylinder on a four-cycle engine has more parts than all of the cylinders here shown.

Working Parts of Engine. It is essential that every automobile operator should be familiar with the names of the working parts of the engine.

As the single-cylinder engines such as used in the Reo, the Oldsmobile, the Cadillac, and other well-known runabouts, are easier to list in detail than multiple-cylinder engines, a typical example of a single-cylinder engine, showing parts in detail, is given in Fig. 32.

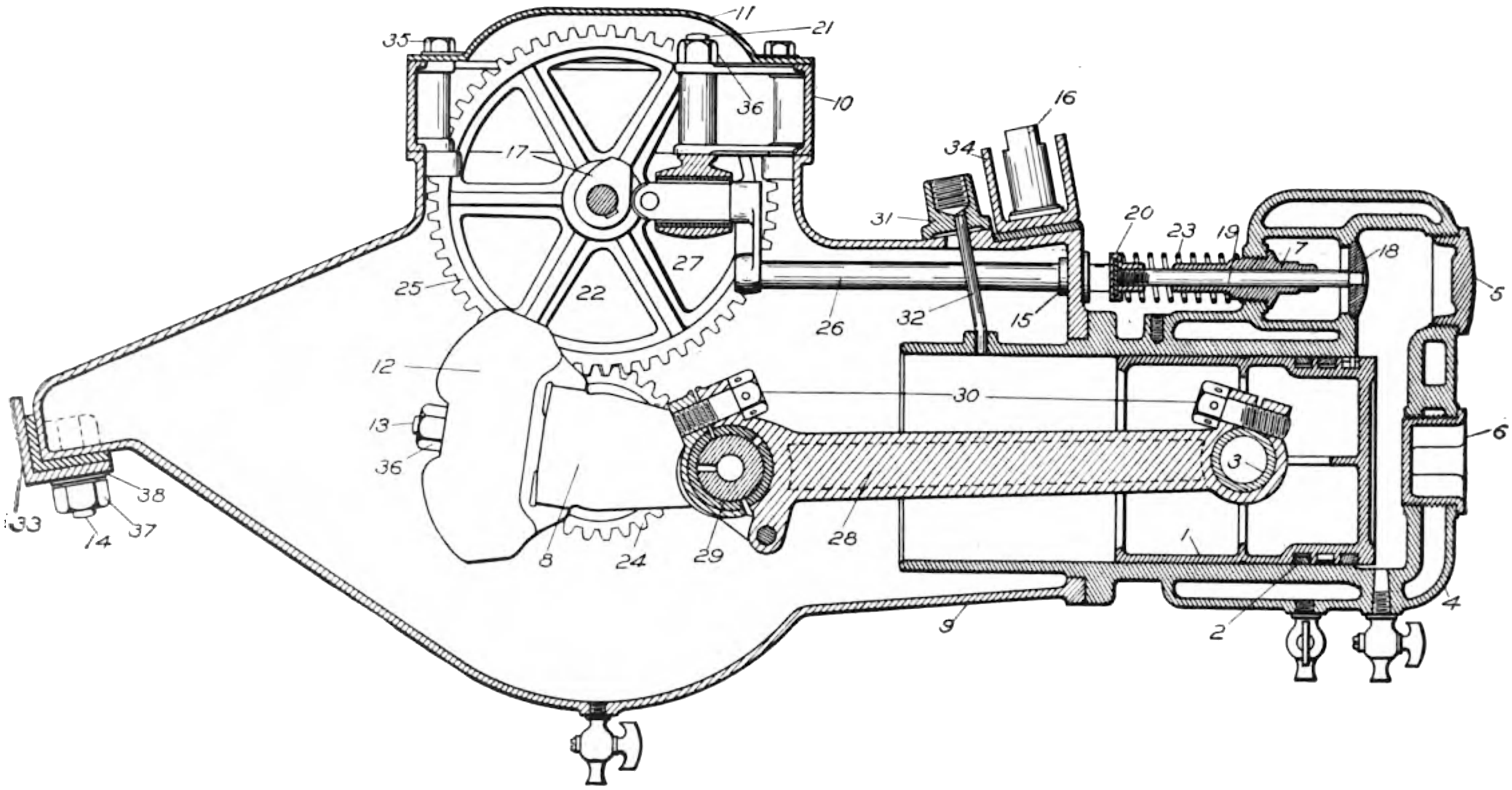

Fig. 32. Diagram Showing Detailed Parts of Single-Cylinder Engine as Used in the Reo Car. Reo Motor Car Company, Lansing, Mich.
1—Piston; 2—Piston-Ring; 3—Piston Pin; 4—Cylinder; 5—Valve-Cover; 6—Water-Jacket Plug; 7—Valve-Stem Guide; 8—Crank-Shaft; 9—Crank-Case; 10—Crank-Case Valve Box; 11—Crank-Case Valve Box Cover; 12—Counterweights; 13—Counterweights 15—Valve-Rod Bushing; 16—Nut for Crank-Case Stud; 17—Exhaust Cam; 18—Valve; 19—Valve Stem; 20—Valve-Stem Head; 21—Valve-Rod Bearing; 22—Valve Roller; 23—Exhaust Valve Spring; 24—Small Cam Gear; 25—Large Cam Gear; 26—Valve-Rod; 27—Valve-Rod Head; 28—Connecting Rod; 29—Connecting-Rod Cap; 30—Connecting-Rod Bolt; 31—Oil-Cup Support; 32—Cylinder Oil Tube; 33—Rear Engine Support; 34—Front Engine Support; 35—Hexagon Nut, 1/8-Inch; 36—Hexagon Nut, ½-Inch; 37—Hexagon Nut ⅝-Inch; 38—Spring Washer, ⅝-Inch.

Purchase full membership to immediately unlock this page

HISTORY

Tens of thousands of important historical sources, many previously unobtainable, are now available for the first time with a Forgotten Books Full Membership.

Unlimited Access
$8.99/month

Continue

*Fair usage policy applies

Single- and Multiple-Cylinder Engines. The *single-cylinder* engine is of necessity the type of engine used on the lowest-priced cars. It has the advantage of simplicity; and when it comes to a choice between a high-grade, relatively high-priced single-cylinder engine car and a multiple-cylinder car with a cheaply built engine, there can be but one choice, and that in favor of the high-grade single-cylinder engine, as, in the other alternative of cheaper cylinders and more of them, one buys only more trouble.

The single-cylinder engine, having only one working impulse

Fig. 33. One-Cylinder Engine as Used in Hewitt Motor-Car. Hewitt Motor Company, New York, N. Y.

for every two revolutions, requires a fly-wheel of heavier weight and larger diameter than is used in the multiple-cylinder engines.

Fig. 33 shows a well-proportioned one-cylinder engine, as used by the Hewitt Motor Company, New York City.

In the single-cylinder construction, even with the very best engine, the vibration is decidedly noticeable when the engine is slowed down under load, as when climbing a hill.

The *two-cylinder opposed type* of construction gives a very good balancing of reciprocating parts. Fig. 34 shows this type of engine as used in the Reo touring car. The motor runs in the same direction as the car, and causes no sidewise vibration, which adds materially to the life of the car. The original two-cylinder opposed cars placed the engine under the body, many of them having the

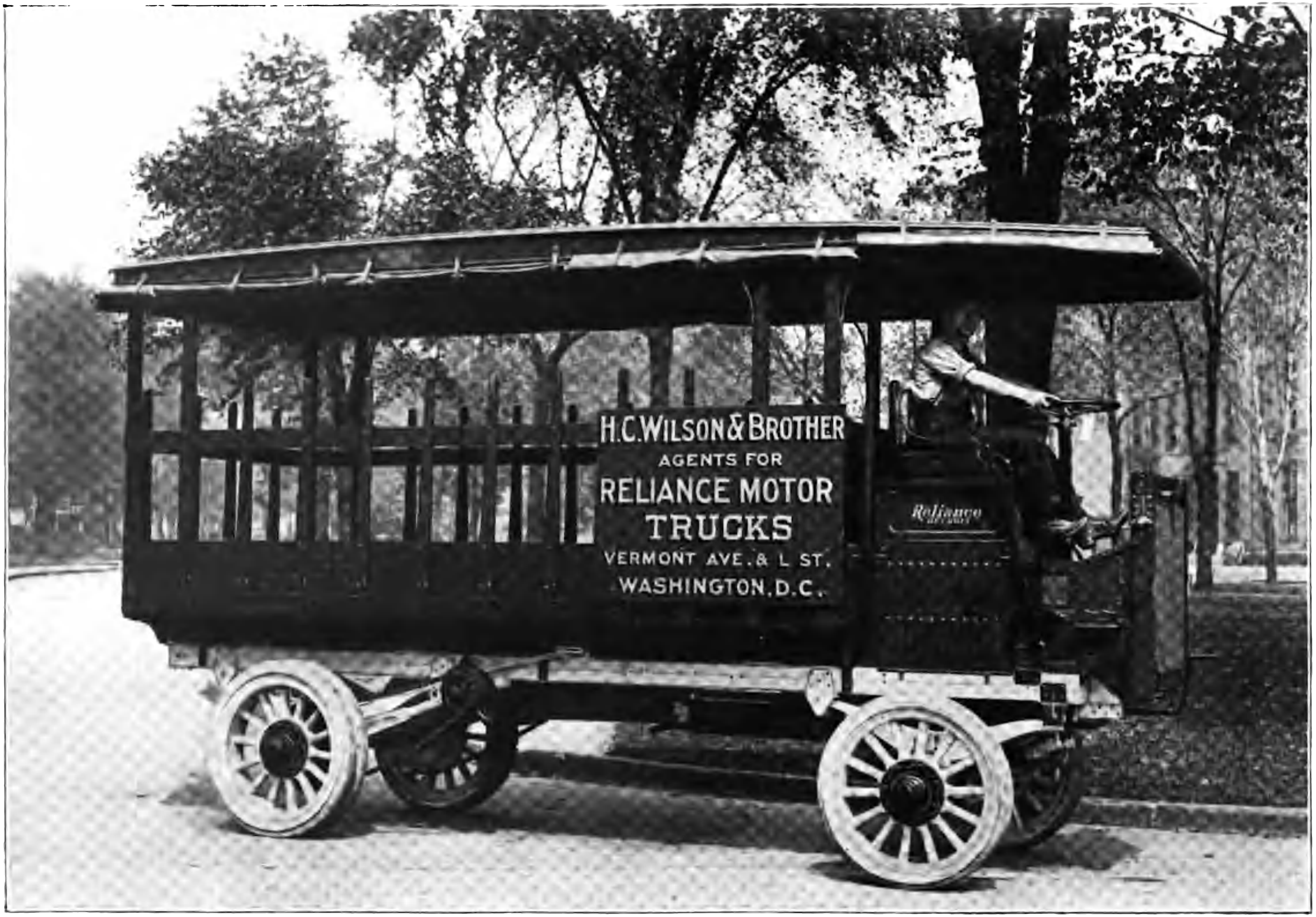

HEAVY-SERVICE MOTOR DELIVERY TRUCK.
Reliance Motor Truck Company, Detroit, Mich.

Purchase full membership to immediately unlock this page

DELVE INTO FANTASY, MAGIC, MYTHOLOGY & FOLKLORE

Forgotten Books' Full Membership gives access to 797,885 ancient and modern, fiction and non-fiction books.

Continue

*Fair usage policy applies

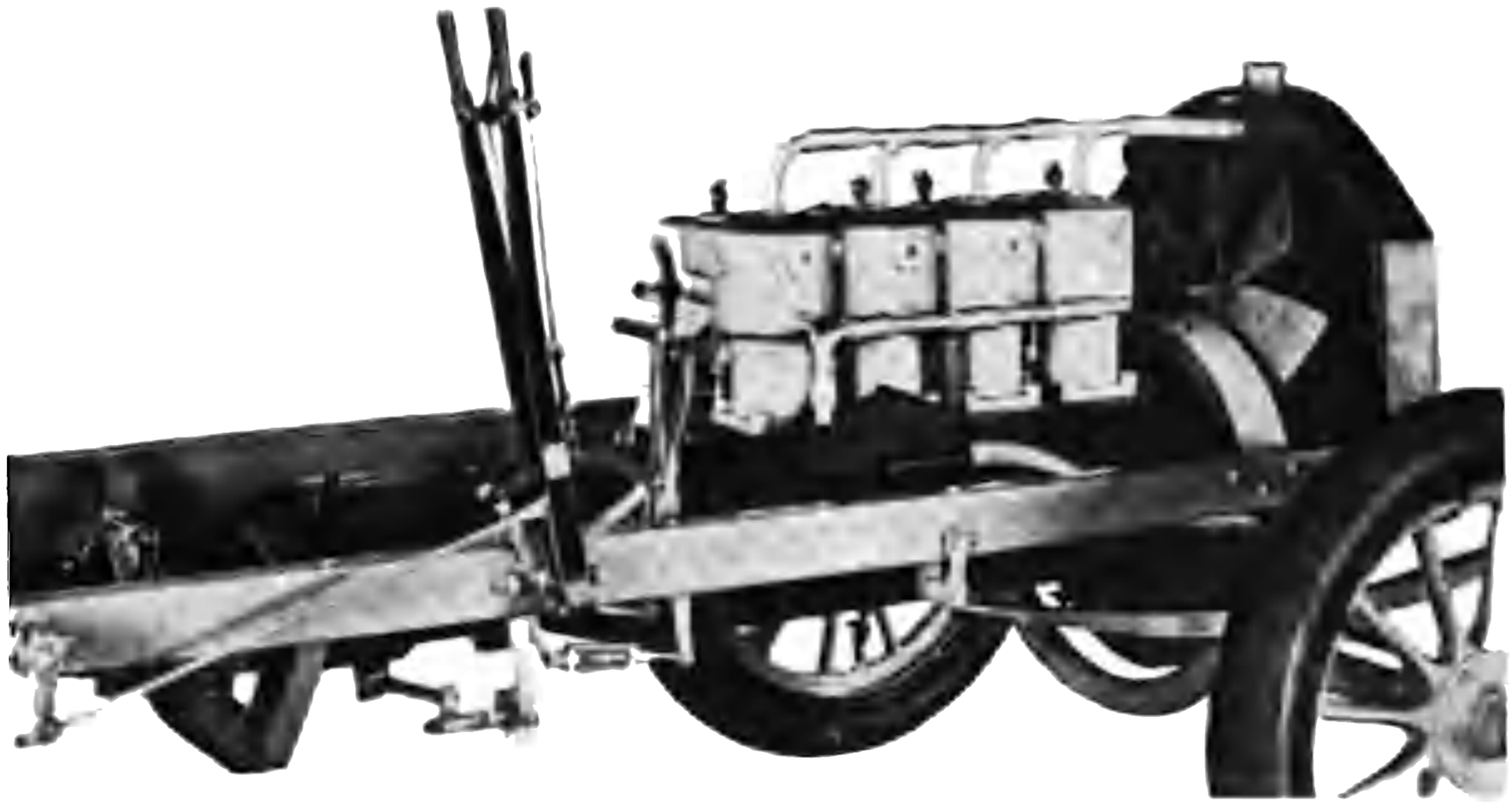

Fig. 35. Four-Cylinder Vertical Engine with Fly-Wheel in Front.
Stevens-Duryea Company, Chicopee Falls, Mass.

Fig. 36. Cylinders, Pistons, and Connecting Rods in Separately Cast Cylinder Type of Construction.
Maxwell-Briscoe Motor Company, Tarrytown, N. Y.

Fig. 36 shows the cylinders, pistons, and connecting rods of the Maxwell-Briscoe motor, Tarrytown, N. Y. This illustrates the separately cast cylinder type of construction.

Fig. 37 shows cylinders, pistons, connecting rods, crank-shaft,

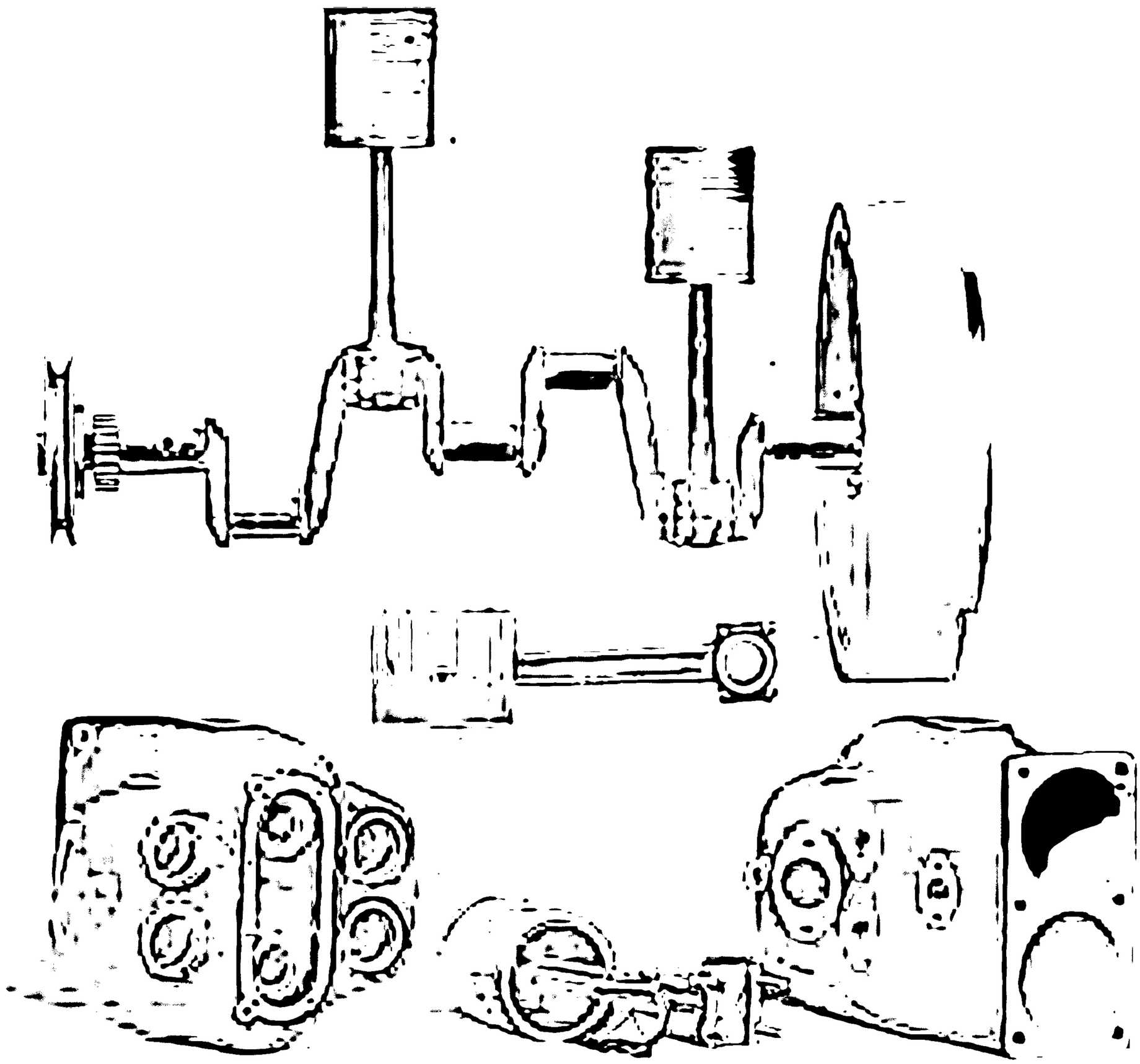

Fig. 37. Disassembled Motor of Packard Car, Showing Cylinders, Pistons, Connecting Rods, Crank-Shaft, and Fly-Wheel. Cast-in-Pair Type of Cylinder Construction. Packard Motor Car Company, Detroit, Mich.

and fly-wheel of the Packard motor-car, Detroit, Mich. This illustrates the cast-in-pair type of cylinder construction.

In each of these illustrations the projecting spaces at the sides of the main cylinder are the valve chambers.

The *crank-shaft* in the best engines is machined from a solid forged slab of high-carbon steel or nickel-steel. By *high-carbon* steel, in the case of a crank-shaft, is meant a steel having a percentage of from .28 to .30 of carbon. Some of the nickel-steels now used in

crank-shaft construction have a tensile strength as high as 225,000 pounds to the square inch, and an elastic limit of 135,000 pounds.

Fig. 38 shows the steps in the cold-machining of a crank-shaft as used in the Columbia car built by the Electric Vehicle Company,

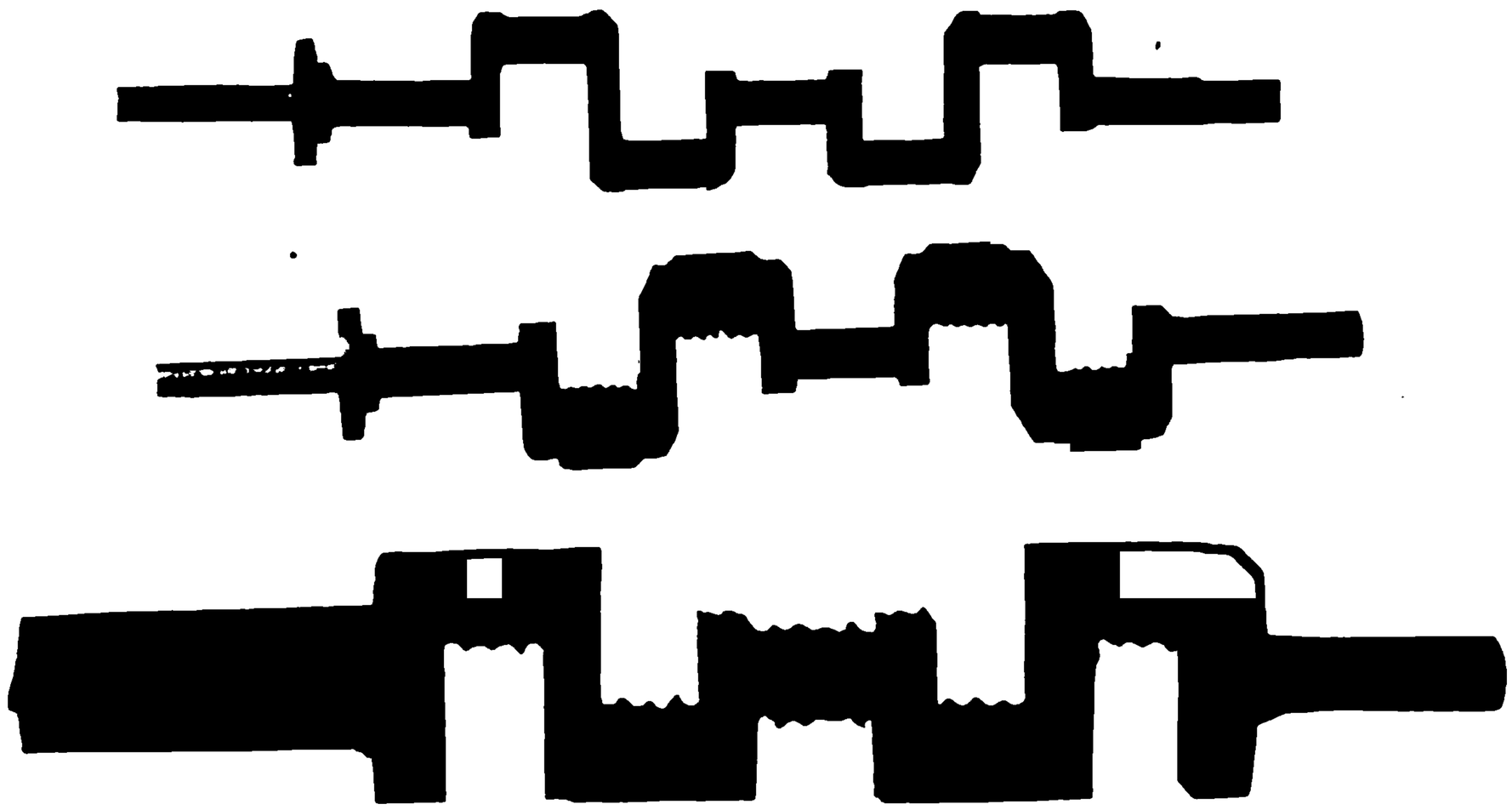

Fig. 38. Steps in Cold-Machining of Crank-Shaft from Solid Slab, for Columbia Car. Electric Vehicle Company, Hartford, Conn.

Fig. 39. Cam-Shaft, Crucible Steel Forging and Finished Product. Lozier Motor Company, Plattsburg, N. Y.

Hartford, Conn. The next best construction is one in which the crank-shaft is hammered and bent into shape before machining; while the cheaper engines use a drop-forged shaft, which is not as likely to withstand severe strains as either of the two previously named types.

Purchase full membership to immediately unlock this page

HISTORY

Tens of thousands of important historical sources, many previously unobtainable, are now available for the first time with a Forgotten Books Full Membership.

Unlimited Access
$8.99/month

Continue

*Fair usage policy applies

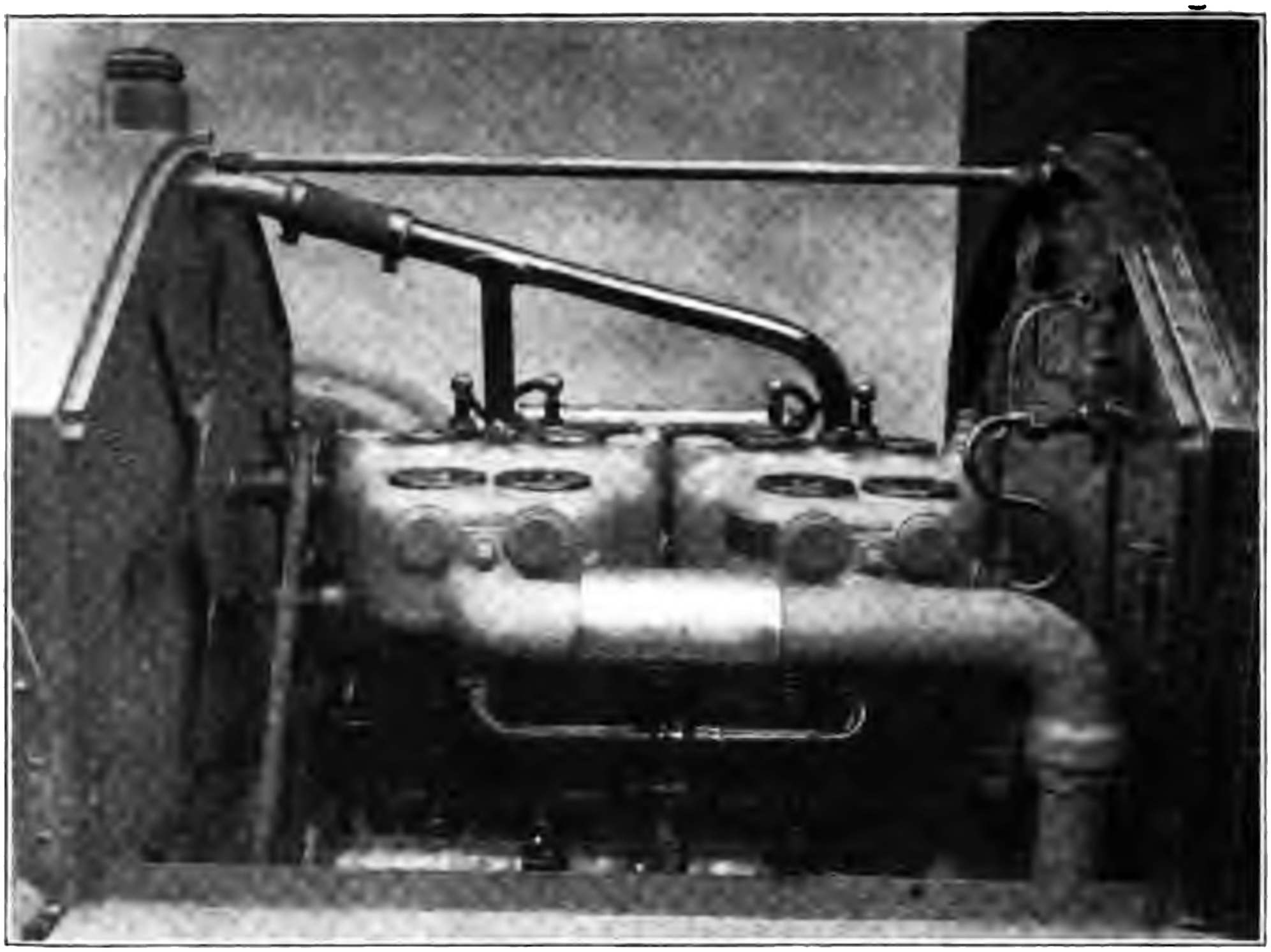

20-30 H. P. MOTOR, SIZE 4x4¼, IMPORTED BERLIET 1909 MODEL

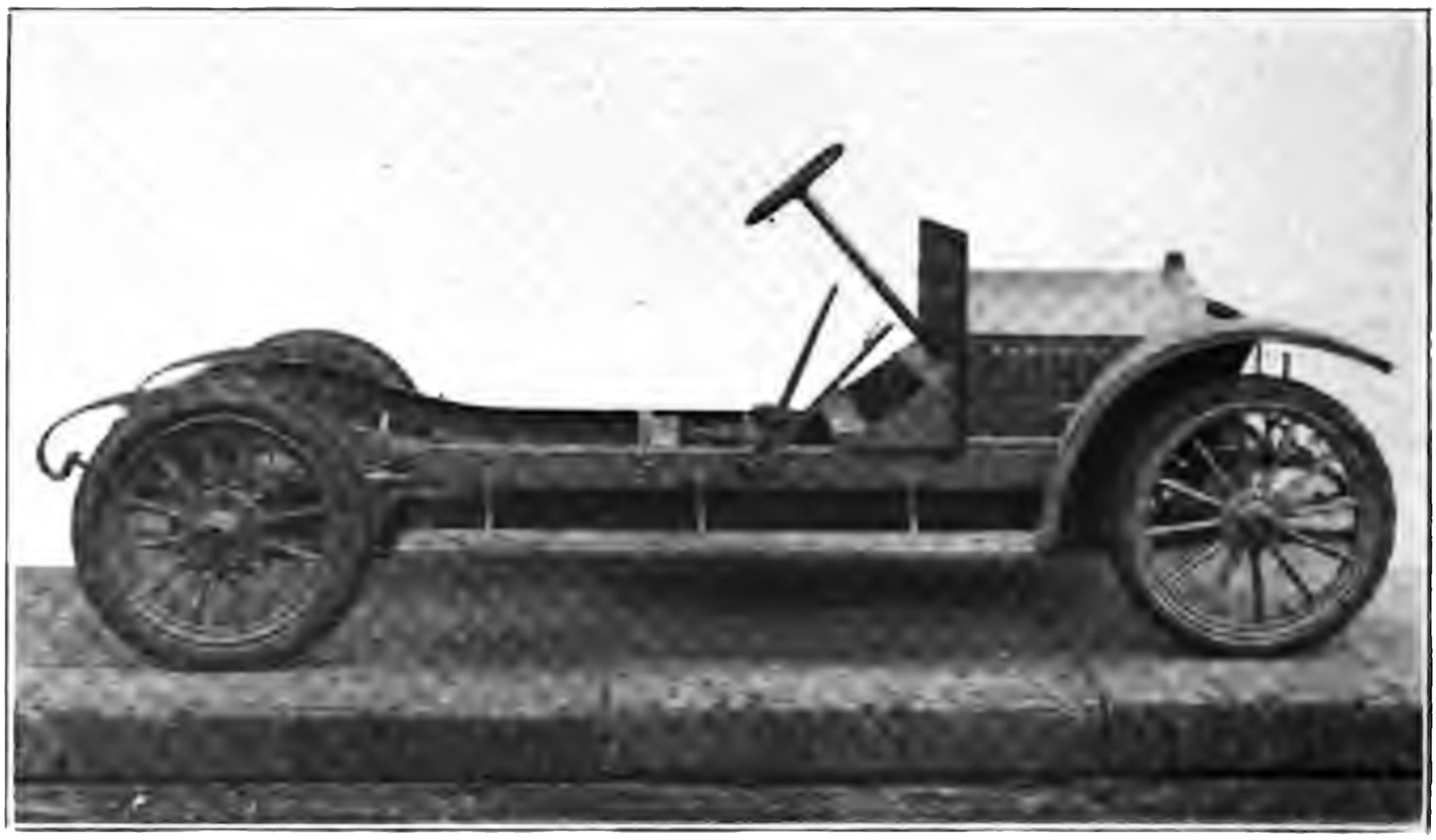

20-30 H. P. CHASSIS, 118-INCH WHEEL BASE, IMPORTED BERLIET 1909 MODEL

The modern tendency in high-grade engines is to observe almost equal care in the making of the *cams* and *cam-shafts* as is observed in the crank-shaft.

Fig. 39 shows a rough forging of crucible steel for the combined cams and cam-shaft as used by the Lozier Motor Company, Plattsburg, N. Y., together with the finished cam-shaft. The cam faces are hardened and ground to shape. Especial attention is also given to the bearings of the cam-shafts, some makers using annular ball bearings for this purpose.

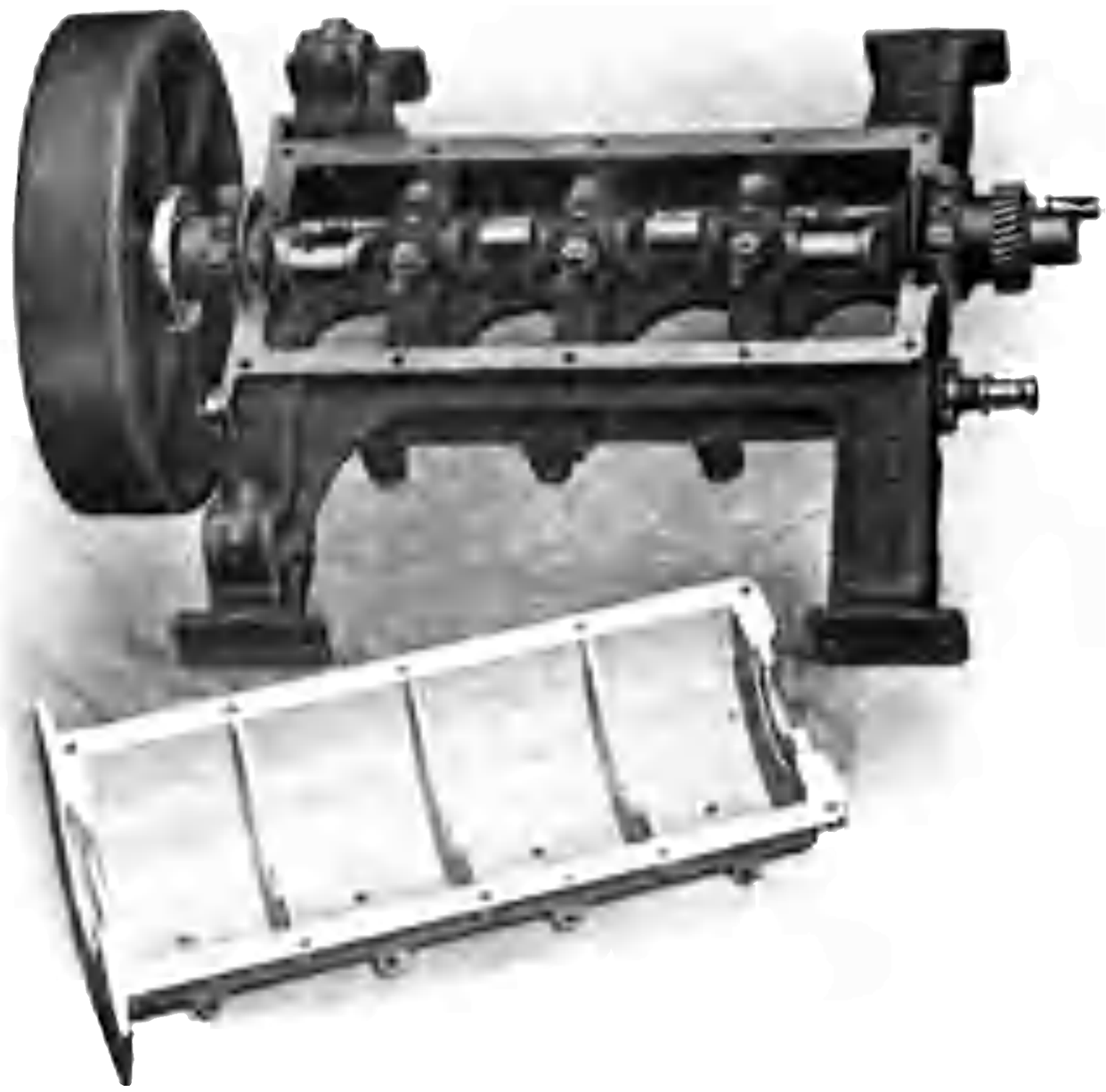

Fig. 40. Engine Base, Showing Support Piece Separate from Crank-Case, as Formerly Used by Premier Motor Manufacturing Company, Indianapolis, Ind. Case and Support are Now Made Integral.

The *crank-case* of most modern automobile engines is constructed of aluminum, partitioned into compartments in order to prevent an excess accumulation of oil at one end of the case in ascending or descending a steep grade. A great many engines use the crank-case as the motor support, relying on aluminum arms to carry the weight of the cylinders, crank-shaft, and fly-wheel. The low tensile strength of aluminum has been an objection to this type of construction, as the arms are liable to breakage. Hence some makers have adopted a light engine base made of stronger material, such as pressed steel, to which the aluminum crank-case proper is bolted. Fig. 40 shows an engine base and crank-case of this type of construction, as formerly used by the Premier Motor Manufacturing Company, Indianapolis, Ind.

The foregoing illustrations will serve to show typical examples

of the main parts of the engine proper. The diagrams shown in Figs. 41 and 42 will serve to show more fully the relative location and operation of these parts—particularly the valve action.

Referring to Fig. 41, which is an end view of the Rambler engine made by Thos. B. Jeffery & Company, Kenosha, Wis., at the lower left-hand side will be noticed the cam-shaft and cam ready to push up on the valve-operating rod, which, when pushed up, actuates the rocker arm *D* to push down the valve proper, shown in the center at the top of the cut, against the action of the valve-spring *A*. While the valve is open, the charge is admitted in the case of the intake valve, or expelled in the case of the exhaust valve, during the period that the valve is kept open by the action of the cam. As soon as the cam has passed the lifter, the action of the valve-spring closes the valve with a sharp cut-off action.

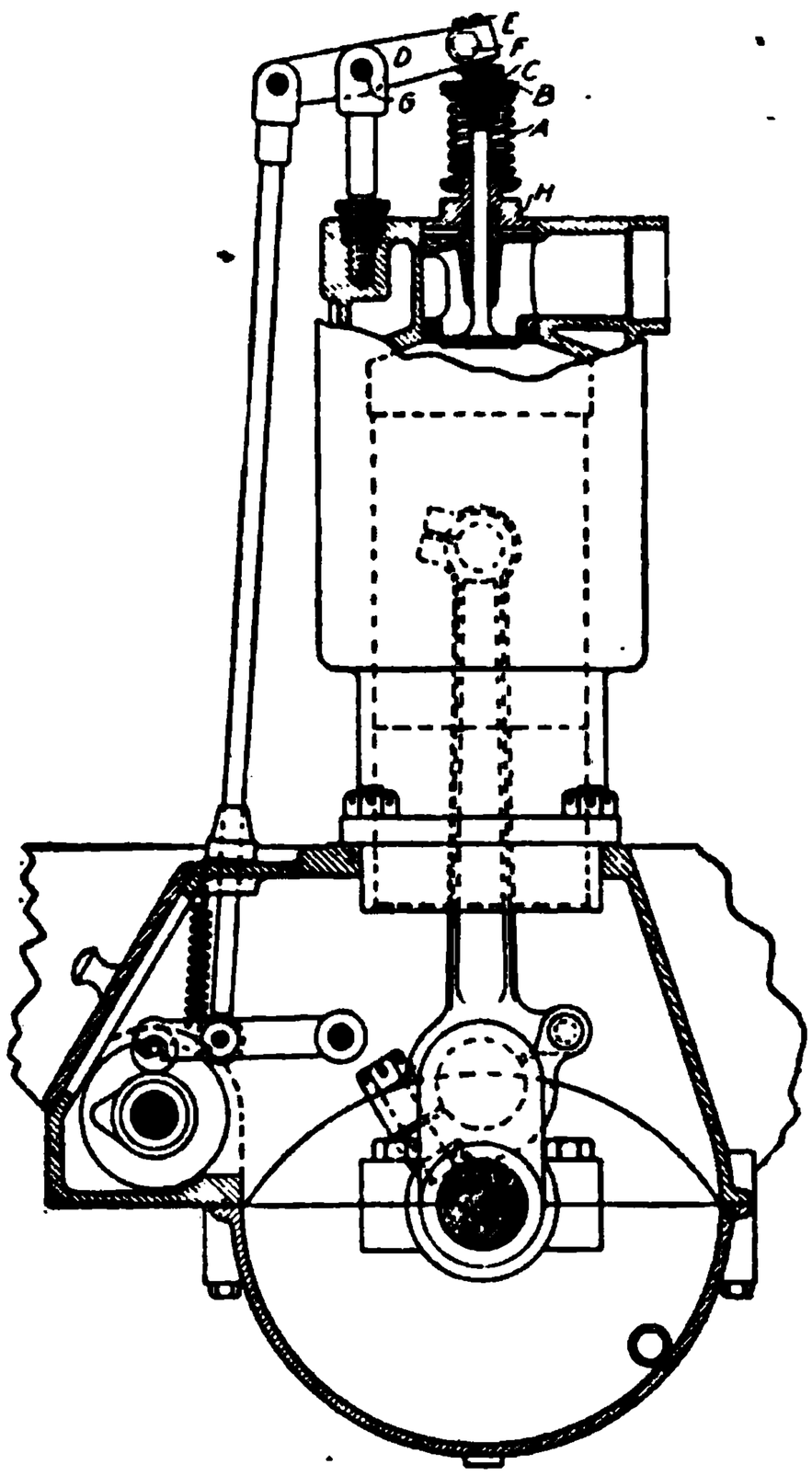

Fig. 41. End View of Rambler Engine. *A*—Valve-Spring; *B*—Spring Adjusting Nut; *C*—Lock Nut; *D*—Rocker Arm; *E*—Screw for Taking Up Play in Rocker Arm; *F*—Cap Screw for Locking *E*; *G*—Pivot Pin for Rocker Arm; *H*—Hexagon Nut for Screwing Valve Cage into Position.

Fig. 42 is a longitudinal view of the same engine, showing the inlet and exhaust valves *A* and *B*; also other details in connection with the ignition and cooling systems, whose positions it will be well to note now, but whose action will be described more fully under the later discussions devoted to ignition and cooling systems respectively.

The modern tendency with respect to valves, both inlet and exhaust, is to provide quick action and abundant opening space. With this in view, some makers have adopted two valves in place of one, or, in some instances, exceptionally large valves.

Fig. 43 shows three views of an exceptionally large valve as used in the 1908 Franklin engine. Theoretically, the ideal cylinder

Purchase full membership to immediately unlock this page

DELVE INTO FANTASY, MAGIC, MYTHOLOGY & FOLKLORE

Forgotten Books' Full Membership gives access to 797,885 ancient and modern, fiction and non-fiction books.

Continue

*Fair usage policy applies

would be one whose entire top would come off to let in a full charge, and then close immediately, the charge being next compressed and exploded, driving the piston forward, whereupon the top would then at once come off completely again and let out the burnt gases. Fig. 43 shows a valve of about one-half the cylinder diameter in width, and directly at the top of the cylinder.

CARE AND OPERATION OF VALVES

Seating of Valves. If the exhaust valve does not seat properly, there will be a lack of compression and loss of power that way, and also a weakening effect on the mixture.

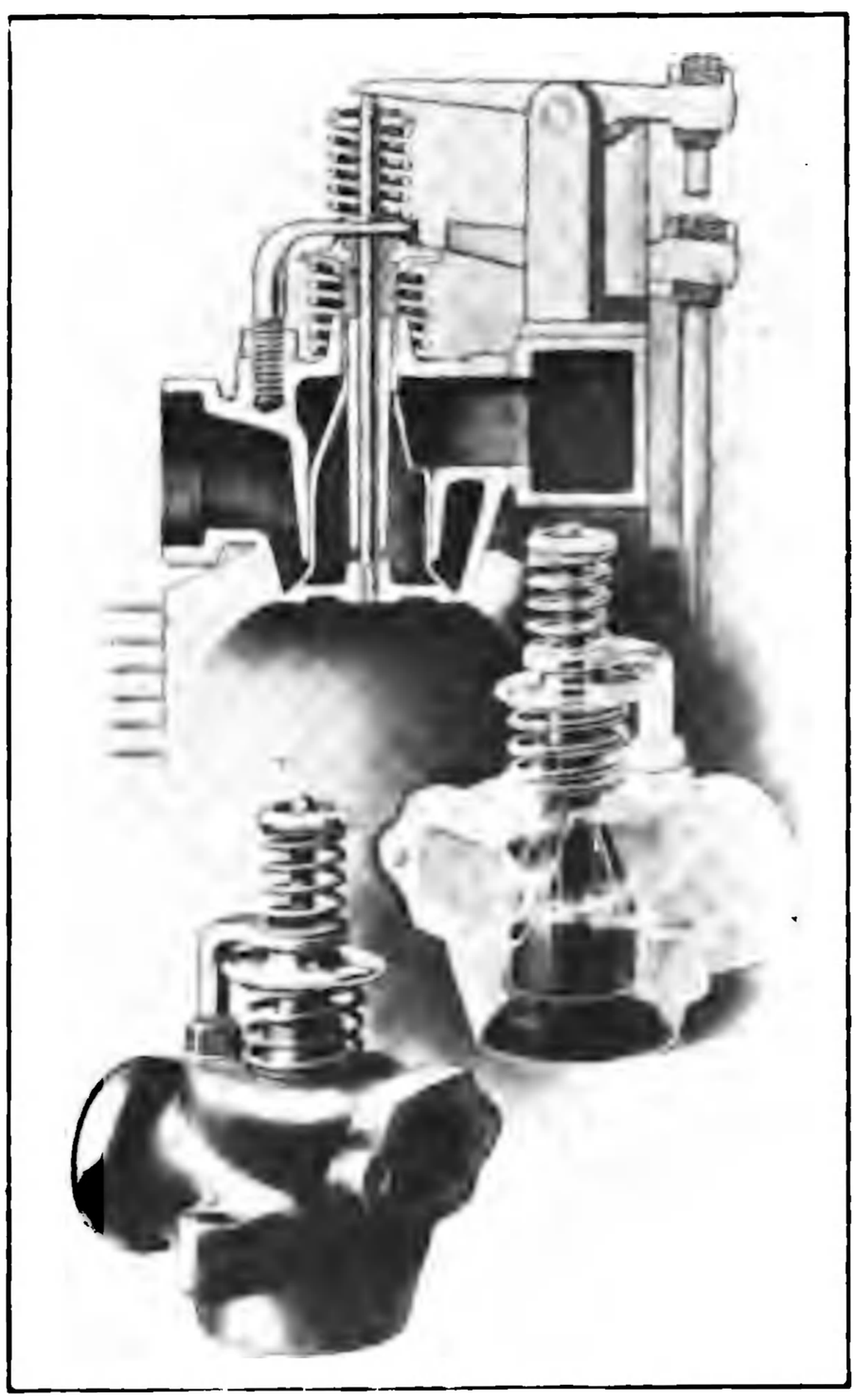

Fig. 43. Concentric Valve of 1908 Franklin Car.
H. H. Franklin Manufacturing Company, Syracuse, N. Y.

If the inlet valve does not seat properly, there will be loss of compression; also there will be danger when the ignition takes place, of shooting back into the carbureter and having back-firing there.

The remedy is to grind the valves in place on their seats, first with emery and oil, and then with tripoli and water.

The valves, it may be, do not seat properly, because of being sooty or gummy. In this case they may not require grinding at all, the remedy being to clean them with kerosene.

In grinding valves, see that waste is placed in the opening to the combustion chamber so as to prevent the emery coming into the cylinder. The operation of grinding is repeated until both surfaces are bright and smooth, with a good fit.

Care must be taken that no emery gets into the cylinder, as this will cause sticking or seizing of piston.

Almost all valves have a slot on the side opposite the stem.

This slot is put there so that a screw-driver bit may be inserted, and with a brace the valve may be rotated to and fro while grinding.

In grinding, just a small quantity of the abrasive paste should be used at a time, with plenty of oil. Make ten or twelve turns in one direction; then reverse. Wipe valve and seat clean occasionally, and note the extent of the bright line. At first this will be irregular and broken. But it must become a continuous band for good seating.

After this has been accomplished, wash valve and seat thoroughly with kerosene.

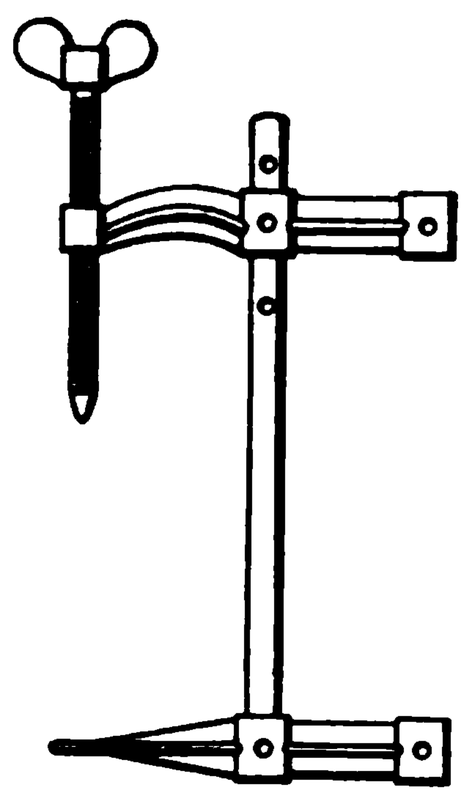

Fig. 44. Lifter Assembled.

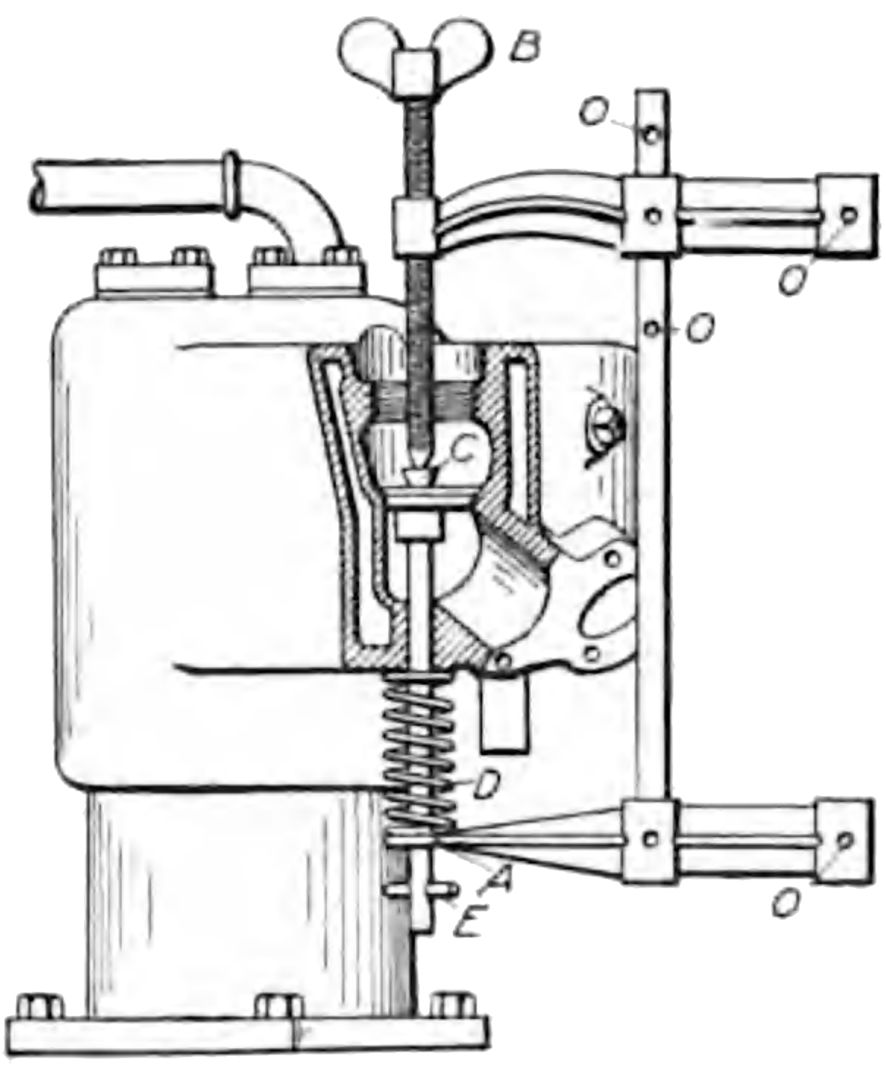

Fig. 45. Lifter Compressing Spring.

Tool for Removing Valve.

If valve is badly worn, it may be necessary to do some filing in order to avoid scoring and consequent catching.

Figs. 44 and 45 illustrate a convenient tool for removing valves. Its action is that of compressing the spring and lifting the washer so that the cotter or key can be removed. The directions for using this tool are as follows:

Place fork *A* beneath washer or in coil of spring *D*. Turn thumb-screw *B* until point sets on top of valve *C*. Then screw down until spring *D* is compressed enough to remove key *E*.

To remove, back up on screw *B*, remove lifter, and take out valve, so that necessary grinding, etc. can be done.

To replace valve in position, simply reverse above instructions.

O represents adjusting holes adapted for different lengths of cylinders and for getting over or under exhaust pipes.

Timing of Valves. If the exhaust valve closes too early, there will be some compression left when the intake valve opens, blowing back through the carbureter and affecting the mixture, and also likely to cause firing in the carbureter.

If the exhaust valve should close too late, it would be open when the inlet valve is open, weakening the mixture in the cylinder.

If the exhaust valve opens too late, there will be back-pressure caused by the cylinder being full of the exhaust gas. The cam is so set that the exhaust valve opens just before the beginning of the exhaust stroke, so as to avoid this back-pressure.

Improper valve timing may be caused by looseness of the reduction gear driving the cam-shaft.

To Set Valve for Proper Timing. In a four-cylinder engine the four cranks are usually 180 degrees or half a revolution apart, so that there is an impulse or power stroke every half-revolution, occurring in the order of first, third, fourth, second.

The cam-shaft is driven by a gear fastened to the crank-shaft. The cam-shaft driving gear, mounted on the crank-shaft, has only half as many teeth as the cam-shaft driven gear which is mounted on the cam-shaft. Hence, for one revolution of the crank-shaft, the cam-shaft turns only through half a revolution. The cams are usually all keyed to the cam-shaft, or a part of the same, so that the adjustment of the cam-shaft with respect to the crank-shaft, if correct for one valve, is correct for all the valves.

The highest grades of motors have the cam-shafts and cams made of one piece of steel so that there is no disadjustment possible.

The first thing to do in valve-setting is to establish the *dead center lines* on the fly-wheel. This is very easily done on a four-cylinder engine or two-cylinder engine, since the points on the fly-wheel will be diametrically opposite. In the diagram, Fig. 46, the dead center lines are shown by the vertical and horizontal lines respectively. By establishing these points and chalking the fly-wheel and the cylinder flange, and then marking the points on the fly-wheel and the cylinder flange with a scriber, the scriber mark on the fly-wheel and cylinder flange will coincide when the pistons of the first and fourth or second and third cylinders, as the case may be, are at the highest point of their travel, or on their head-end dead centers, respectively.

Purchase full membership to immediately unlock this page

HISTORY

Tens of thousands of important historical sources, many previously unobtainable, are now available for the first time with a Forgotten Books Full Membership.

Unlimited Access
$8.99/month

Continue

*Fair usage policy applies

replace the driving gear, and retest. This is the course to pursue if a valve is opening too early and closing too early, or opening too late and closing too late, which is a sure indication that the cam-shaft does not bear the proper relation to the crank-shaft. If events of opening and closing of valves are not regularly out of time, the remedy does not lie in the adjustment of the cam-shaft, but in the adjustment of the individual valve push-rods. Provision for lengthening or shortening these is made in different ways in different engines; and

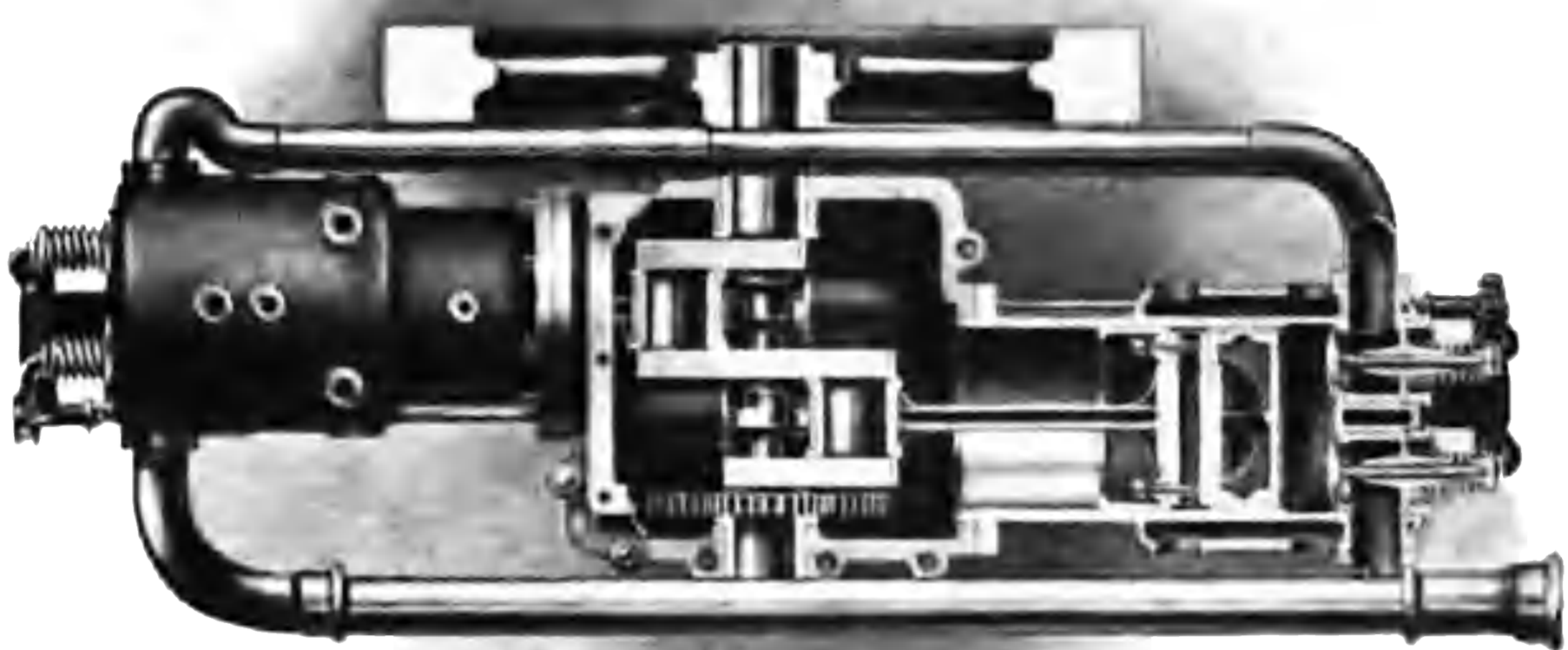

Fig. 47. Section of Two-Cylinder Engine Permitting of Access to Valves through Spark-Plug Hole.

this lengthening and shortening must be done for such individual valves as lift or close out of time, until all the events occur in uniform sequence—that is, until the angles past the dead center lines are the same for each valve.

Poor Compression. To improve compression, see that valves are not leaky; that is, regrind them, if necessary, until they seat perfectly and there is no leak. See also that there is sufficient oil, but do not supply a surplus of oil. Use just as much oil as can be used without causing smoke or carbonizing. Too much oil will cause the exhaust valves to become choked up.

A small pressure-gauge is applied to the spark-plug hole in the

cylinder, in order to test for compression. Note the gauge reading when cranking slowly. In testing for leaks, soap-water is injected at all points suspected, and the location of the bubbles will indicate the points of leak.

Another cause of lack of compression may be the sticking of piston-rings, due to corrosion or carbonizing. Cleaning with kerosene is the remedy.

The compression may also be weakened by a leak at the base of the spark-plug.

Overheating is likely to be accompanied by bad compression.

The easiest way to test for poor compression is by cranking. If there is but little resistance, the compression is weak.

Corrosion. To remove corrosion in cylinders, put kerosene into them, and let it remain over night. At the end of each week, it is well to put in each cylinder a half-pint of kerosene; and in the morning, by opening the compression relief-cocks, the kerosene can be blown out of the cylinders. If cylinders are hardened with corrosion, it must be scraped out.

For removing corrosion, Mr. C. T. Ziegler, who conducts one of the most prominent selling agencies in Chicago, recommends a mixture consisting of two-thirds paraffine oil and one-third kerosene. He states that he has found this more effective than anything else in removing hard substance.

To have as little corrosion as possible, it is advisable to use only the highest grade of mineral oil.

COOLING SYSTEMS

The Air-Cooled Engine. As the efficiency and consequently the power of a gas engine depend on the temperature difference at the end of the stroke below that at the beginning, it will be seen that the more perfect the cooling system, other things being equal, the more efficient will be the engine, and the greater power per cylinder will it develop.

It is noteworthy that but a few years ago air-cooled engines were not considered a possibility for high power, as the limit to be reached in a 4 by 4-inch cylinder was about 5 horse-power. Larger cylinders were found to get too hot and to subject the metal to too great strains, besides burning up the lubricant. As compared with

this rating of a few years ago of 5 horse-power per cylinder for the air-cooled engine, which rating may still be found in many textbooks on gas engines and automobiles, it is interesting to note how improvements in air-cooling have enabled the manufacturers of the Franklin car to build a 3¼ by 3¼-inch engine with a capacity of 12 horse-power to the cylinder.

The air-cooled type of engine is being used on a good many popular and successful cars; and the growing percentage of all American cars using air-cooled motors is certain evidence of the improvement of this type of engine.

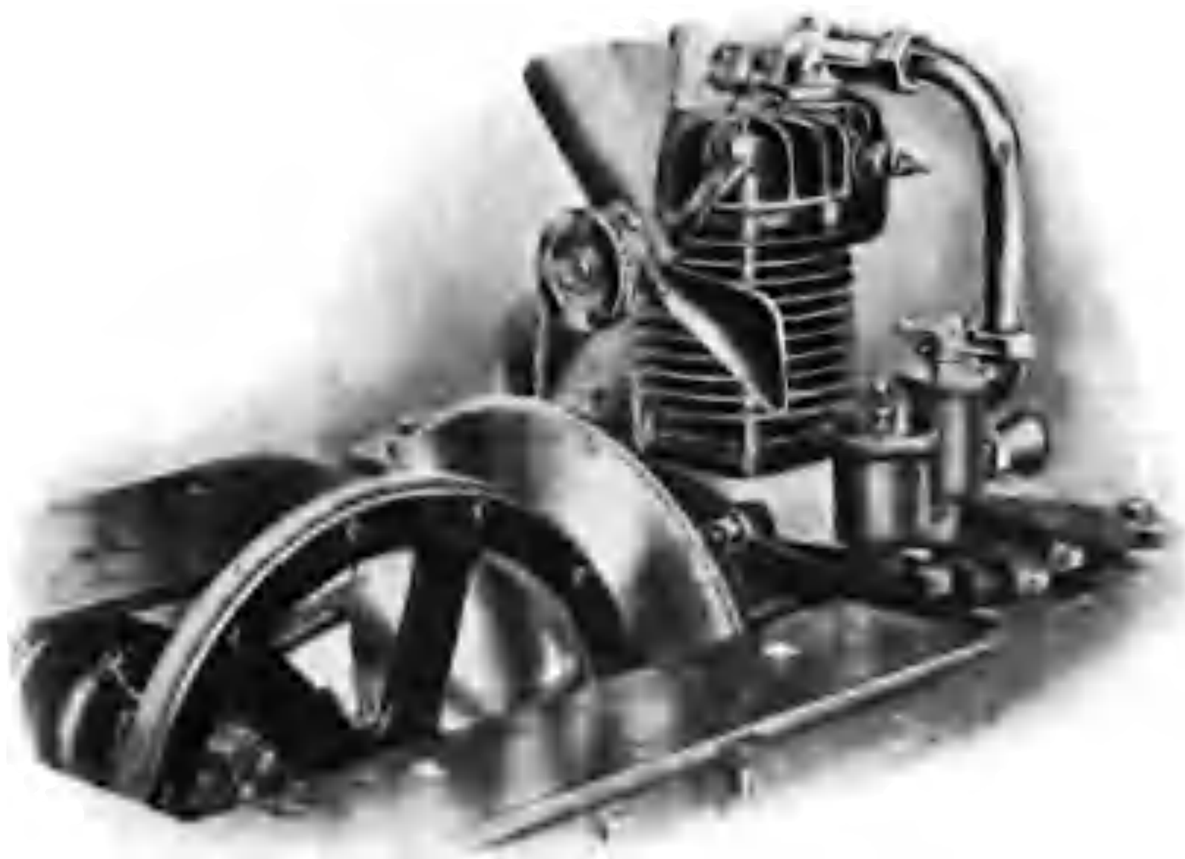

Fig. 48. Single-Cylinder Air-Cooled Engine as Used in Orient Buckboard.
Waltham Manufacturing Company, Waltham, Mass.

Fig. 48 shows a single-cylinder air-cooled engine as used in the Orient buckboard manufactured by the Waltham Manufacturing Company, Waltham, Mass.

Fig. 49 shows a two-cylinder opposed air-cooled motor with 4 by 4-inch cylinders, as used in the Holsman Automobile, Chicago. It lies lengthwise of the car. Special features of this engine are a double set of spark-plugs wired up so that a snap switch turns off one set and turns on the other; also cylinder-heads screwing into the cylinders instead of being fastened on by studs, thus facilitating quick removal and replacement of the cylinder-heads. The flat spokes of the fly-wheel act as a ventilating fan.

Fig. 50 shows the exhaust side of the Franklin six-cylinder engine. The illustration shows the regular exhaust pipe from the top and the auxiliary exhaust pipe from the bottom of the cylinders.

Fig. 51 shows the 1908 Franklin engine in "phantom" drawing, showing all the working mechanism. The large intake valve and

Purchase full membership to immediately unlock this page

DELVE INTO FANTASY, MAGIC, MYTHOLOGY & FOLKLORE

Forgotten Books' Full Membership gives access to 797,885 ancient and modern, fiction and non-fiction books.

Continue

*Fair usage policy applies

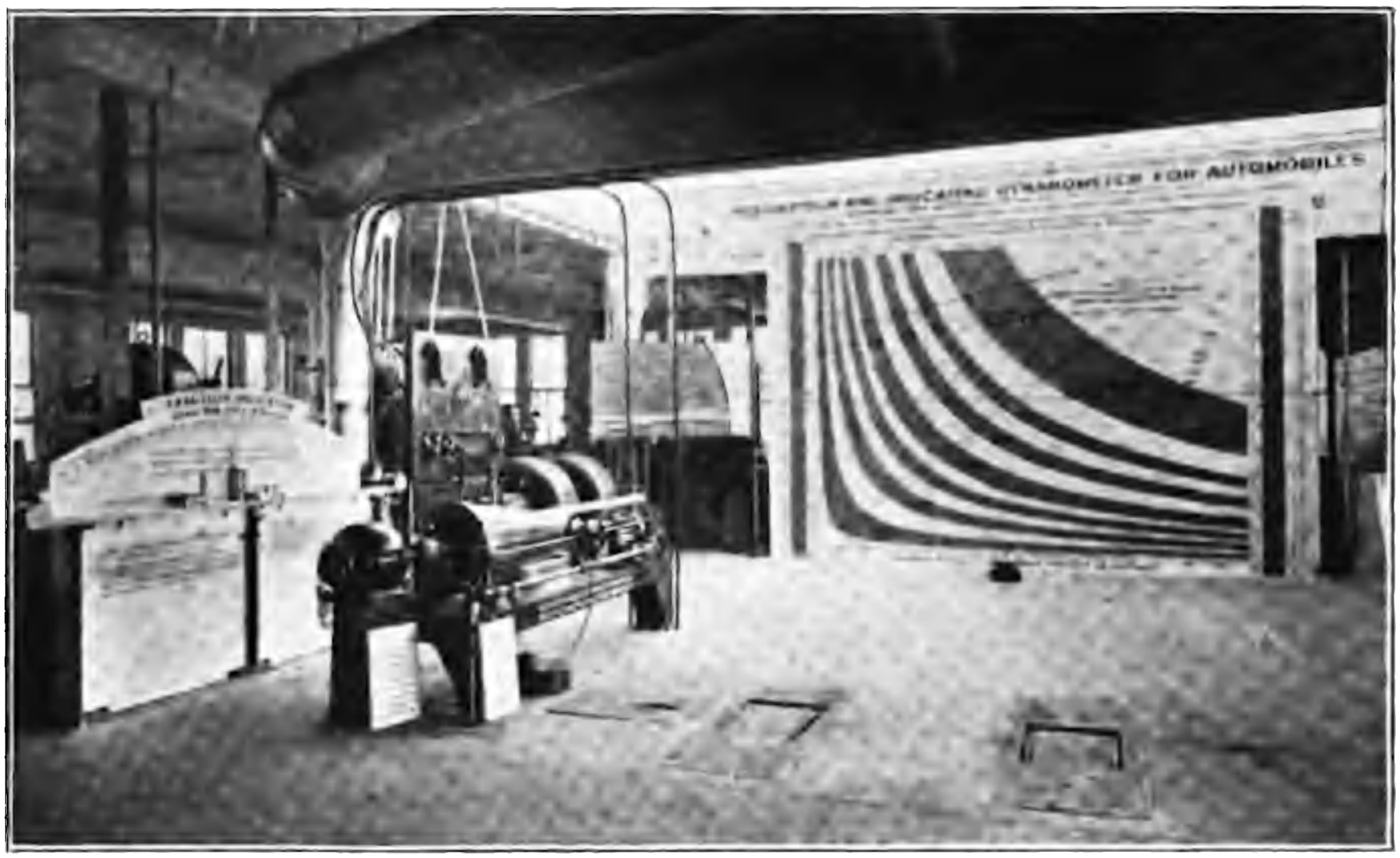

General View of Testing Room, Showing Traction Indicator Speed Indicator, Grade Meter, and Horse-Power Chart.

An Automobile on the Rollers Ready to be Tested.

VIEWS IN AN AUTOMOBILE TESTING LABORATORY

Fig. 49. Two-Cylinder Opposed Air-Cooled Engine as Used in Holsman Automobile.
Holsman Automobile Company, Chicago, Ill.

Fig. 50. Exhaust Side of Franklin Six-Cylinder Engine, Showing Regular Exhaust Pipe from Top and Auxiliary Exhaust from Bottom of Cylinders.
H. H. Franklin Manufacturing Company, Syracuse, N. Y.

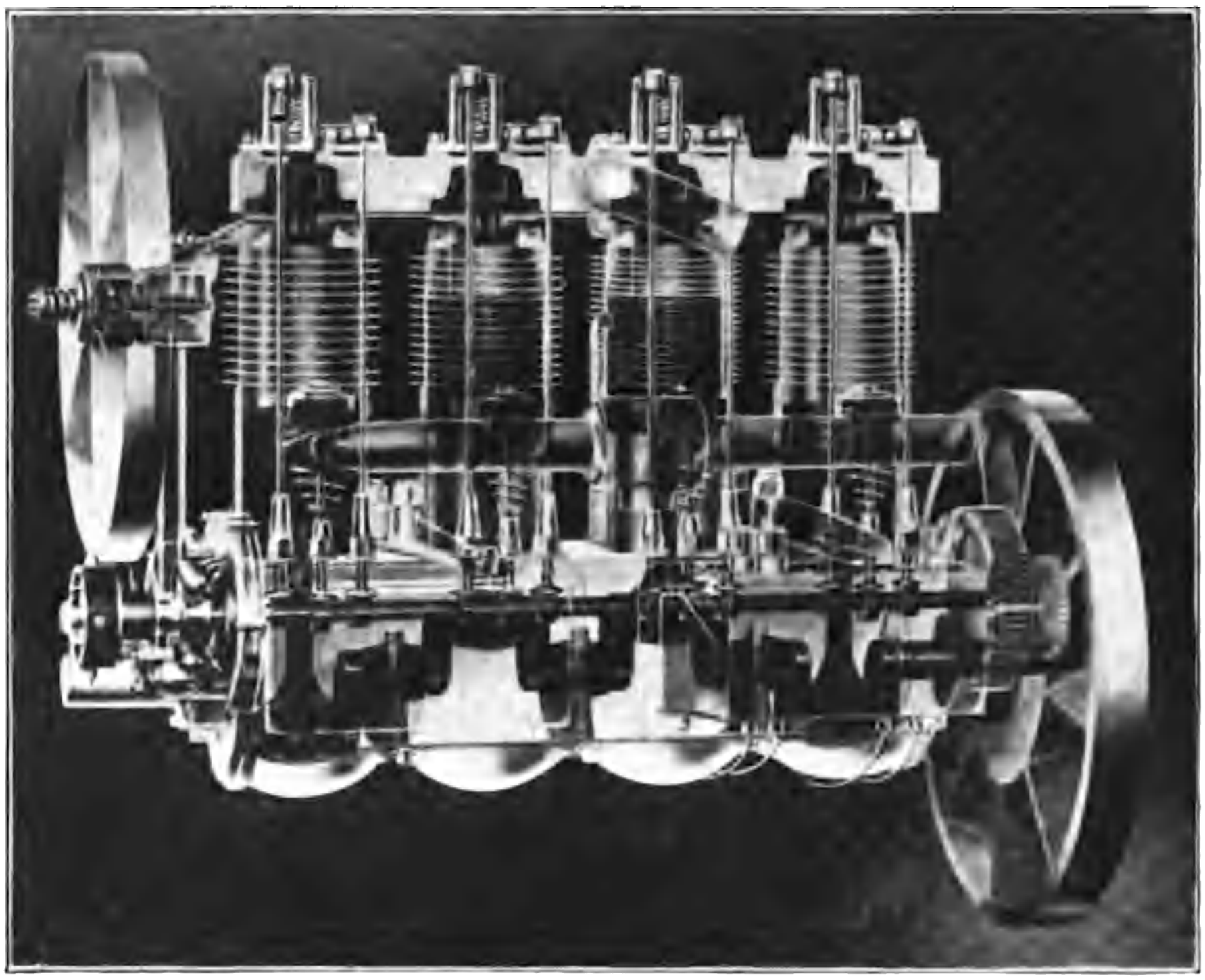

Fig. 51. "Phantom" Drawing of 1908 Franklin Air-Cooled Engine.
H. H. Franklin Manufacturing Company, Syracuse, N. Y.

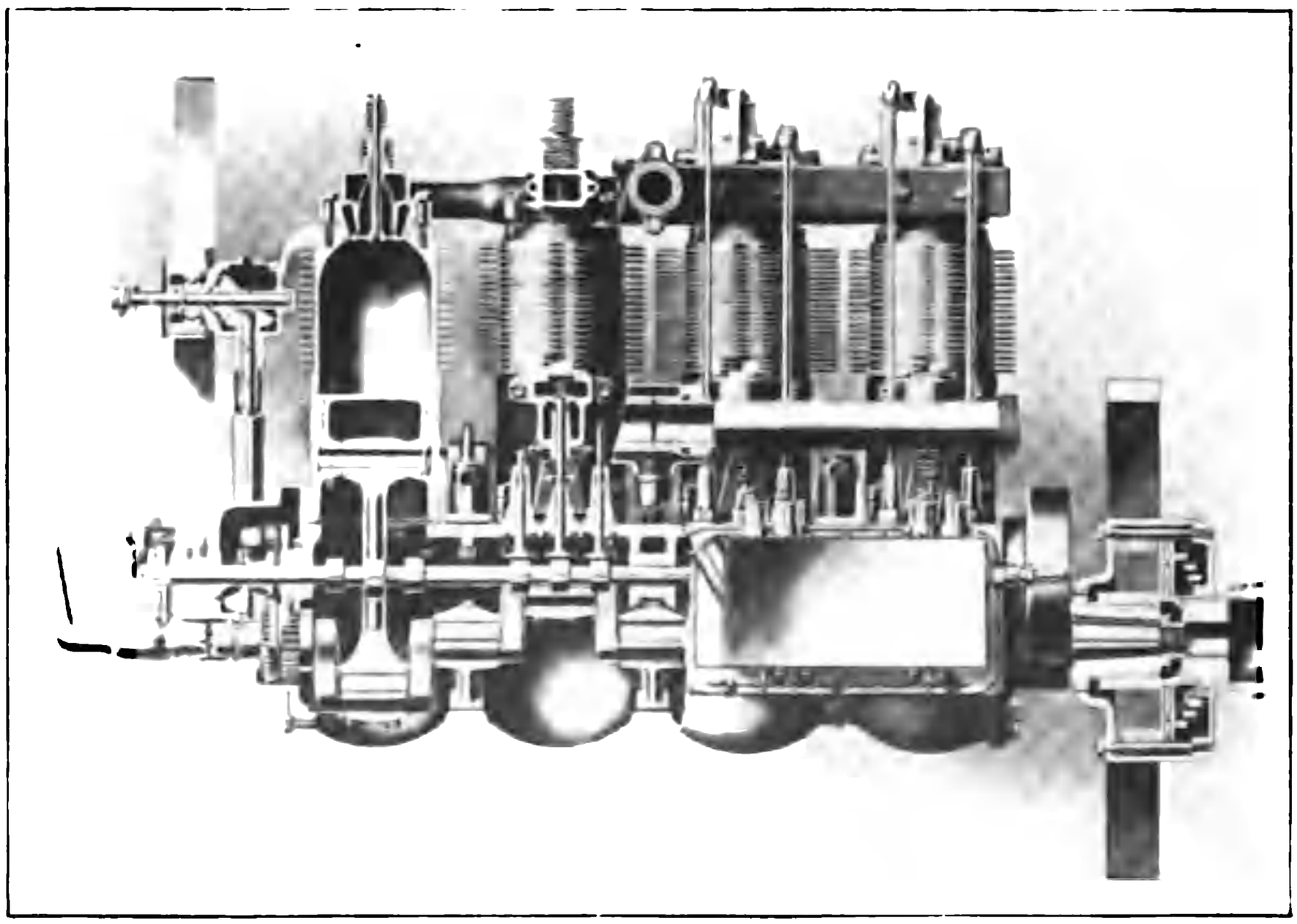

Fig. 52. Sectional View of Franklin 1908 Engine.
H. H. Franklin Manufacturing Company, Syracuse, N. Y.

Purchase full membership to immediately unlock this page

HISTORY

Tens of thousands of important historical sources, many previously unobtainable, are now available for the first time with a Forgotten Books Full Membership.

Unlimited Access
$8.99/month

Continue

*Fair usage policy applies

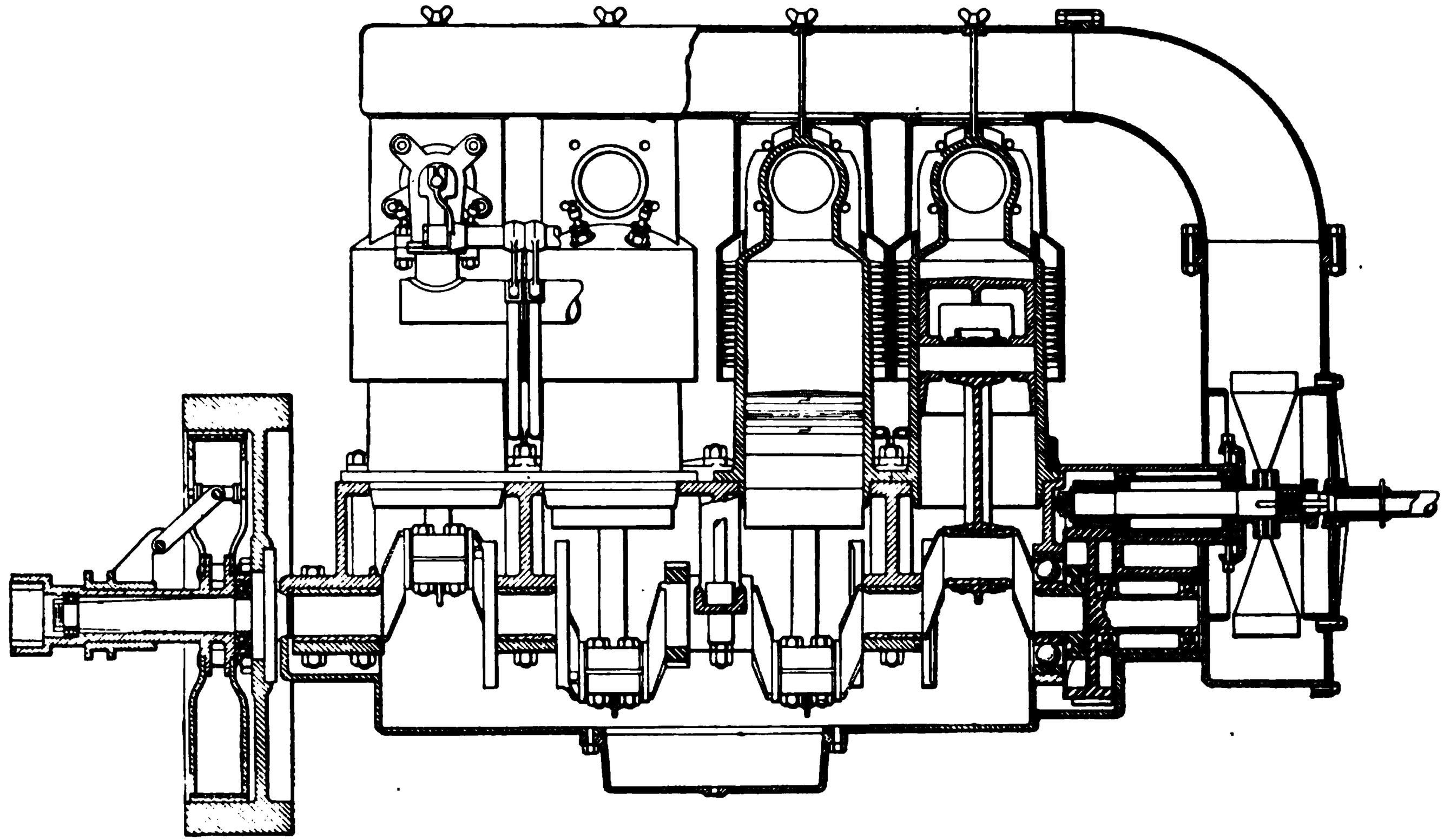

Fig. 54. Sectional View of Frayer-Miller Engine Cooled by Centrifugal Air-Blower. Oscar Lear Automobile Company, Columbus, Ohio.

A description of air-cooled motors would not be complete without mention of the *revolving-cylinder motor* as used in the Adams-Farwell car built by the Adams Company, Dubuque, Iowa.

Fig. 55 is an external view of this motor; Fig. 56 shows the motor in its mounting in the frame; and Fig. 57 is a diagram illustrating its operation. The cylinders revolve around a common center—the vertical stationary crankshaft. The pistons and connecting rods revolve around another common center—the single crankpin. The rotating cylinders throw off the hot air by the action of the centrifugal force, thus doing away with the necessity for a fan. The weight of the revolving cylinders serves the same purpose as a fly-wheel. By doing away with fan and fly-wheel, the total weight required is less than in engines of ordinary construction.

Fig. 55. Bottom View of 63-H. P. Revolving-Cylinder Motor of Adams-Farwell Car, with Cast-Iron Cylinders and Longitudinal Cooling Flanges. Adams Company, Dubuque, Iowa.

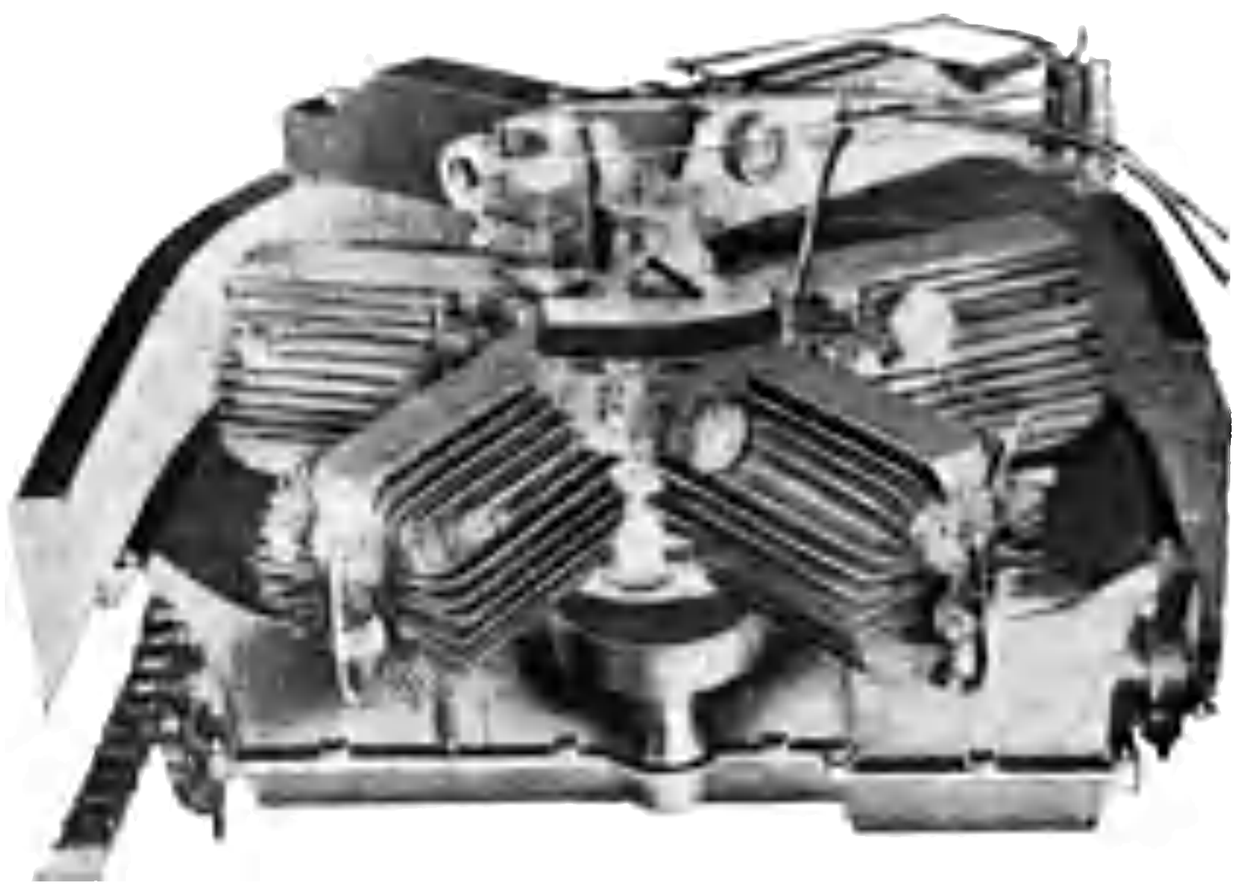

Fig. 56. Revolving-Cylinder Motor of Adams-Farwell Car, in Mounting on Frame. Adams Company, Dubuque, Iowa.

Water-Cooling Systems. In water-cooled engines the cooling system consists of a water storage tank, connected by pipes to a circulating pump, from which pipes connect to the cylinder jackets, which open, at a point remote from the inlet pipe, to outflow pipes leading to the top of the radiator, back of which is a suction fan.

Fig. 58 shows a water-cooling system designed for a four-cylinder engine with independently cast cylinders. Fig. 59 shows a system for the twin-cylinder or "cast-in-pair" type of construction. Both of these diagrams show systems in which the radiator itself is the only storage tank. A good many cars have a storage tank for water, in addition to the radiator.

Referring to Fig. 58, it will be noticed that from the lower part of the radiator a tube runs to a water-strainer, which is an easily opened receptacle containing a small disc of wire gauze preventing the passage of sand and dirt into the water pump. The strainer is also provided with a cock for draining the entire water system. Most water systems provide also a cock in the pipe, just underneath the radiator. In draining the water system, be sure that both these cocks are opened; otherwise some water will remain in the system, which might result in freezing in cold weather.

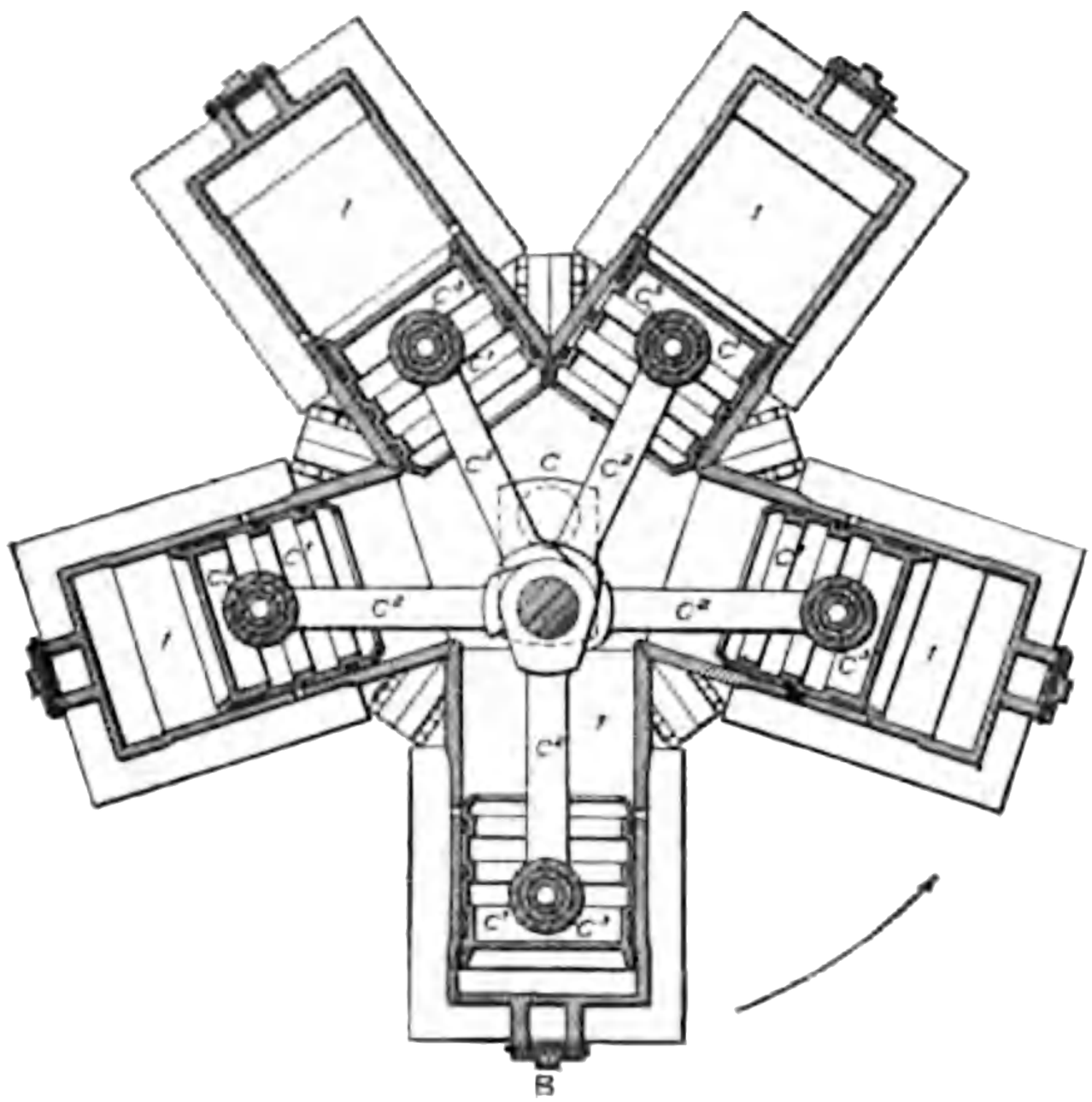

Fig. 57. Diagram Showing Operation of Adams-Farwell Rotating-Cylinder Engine. Adams Company, Dubuque, Iowa.

Rubber hose connections in the water system are a source of great annoyance, and are being discontinued in the best cars, where they are being replaced by copper pipes with ground connections. Copper tubing, though longer-lived than rubber hose, has also disadvantages due to its liability to corrosion. Aluminum tubing has been used by some makers, though not to sufficient extent as yet to determine whether it can be recommended as the most desirable flexible tubing or not.

In order to insure the clearness of water in the water-circulating

Purchase full membership to immediately unlock this page

DELVE INTO FANTASY, MAGIC, MYTHOLOGY & FOLKLORE

Forgotten Books' Full Membership gives access to 797,885 ancient and modern, fiction and non-fiction books.

Continue

*Fair usage policy applies

also designated as the *honeycomb* type. The tubular type consists of either vertical or horizontal tubes, preferably of circular section and of rapidly radiating material (such as copper), with projecting fins or washers to assist in dissipating the heat. The tubular type has an advantage over the cellular type in that its construction is usually such that if a leak occurs in one tube the entire radiator is not put out of commission. In the cellular type, on the other hand, the main aim of the construction is to secure free play and flow of water in all directions through a continuous body of water, by means of

Fig. 60. Tubular Radiator, Showing Sectional and Separable-Construction Flat Tubing and Large Radiating Fins.
Reo Motor Car Company, Lansing, Mich.

lateral joints. This type of radiator is more efficient than the tubular, but more fragile. Fig. 60 shows the Reo tubular radiator; and Fig. 61, the Mayo cellular radiator.

Pumps are almost universally of the gear type, the water being lifted by the pressure of gear teeth against each other. A few cars use pumps with flat or square pistons, but the gear type is superseding these. In early cars, both pump and fan were belt-driven, but recent practice is in favor of gear drive from the cam-shaft.

The gear type of pump has an advantage over the piston type in that the strain is not periodic but is uniform throughout the entire revolution Fig. 62 shows the principle of operation of the gear type of pump.

Still another method of circulation is used in the Maxwell car, known as the *thermo-siphon* method, which is simply a siphonage in place of a pump. The circulation, depending entirely on tem-

perature difference and not on engine speed, is greatest when the engine is hottest, which may be when its speed is low, as in going up a hill.

Fig. 63 shows the Peerless engine, giving a view of the encased

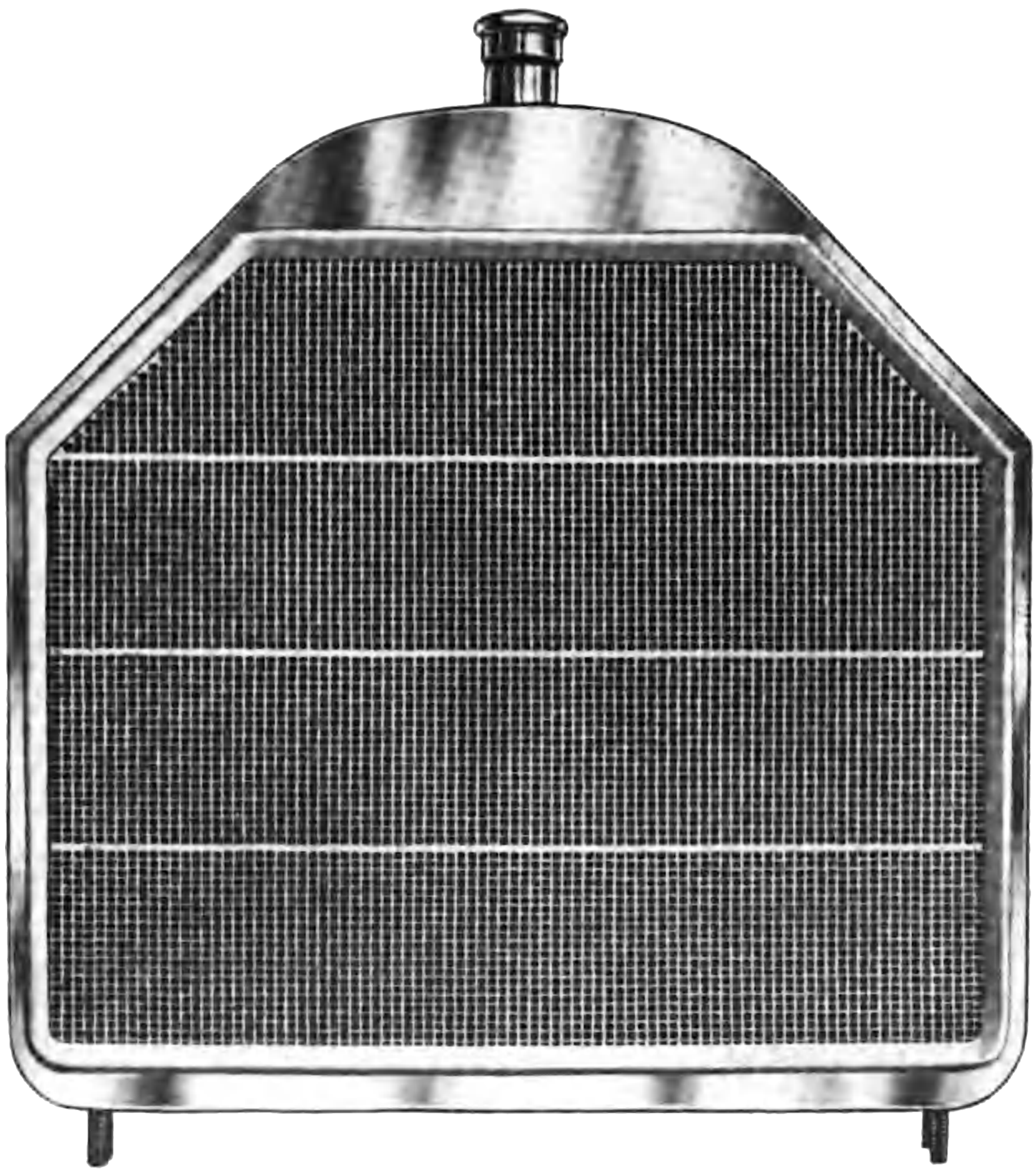

Fig. 61. Mayo Cellular Radiator of Type Used in Stearns 30-60-H. P. Cars. Mayo Radiator Company, New Haven, Conn.

geared pump at the right, also the belt-driven cooling fan. The arrows indicate the direction of water circulation.

Gaskets. In all flanged joints where a flange fits to another flange or to a cylinder or pump-shell or any other part in a water line or steam line, a compressible piece is inserted between the two

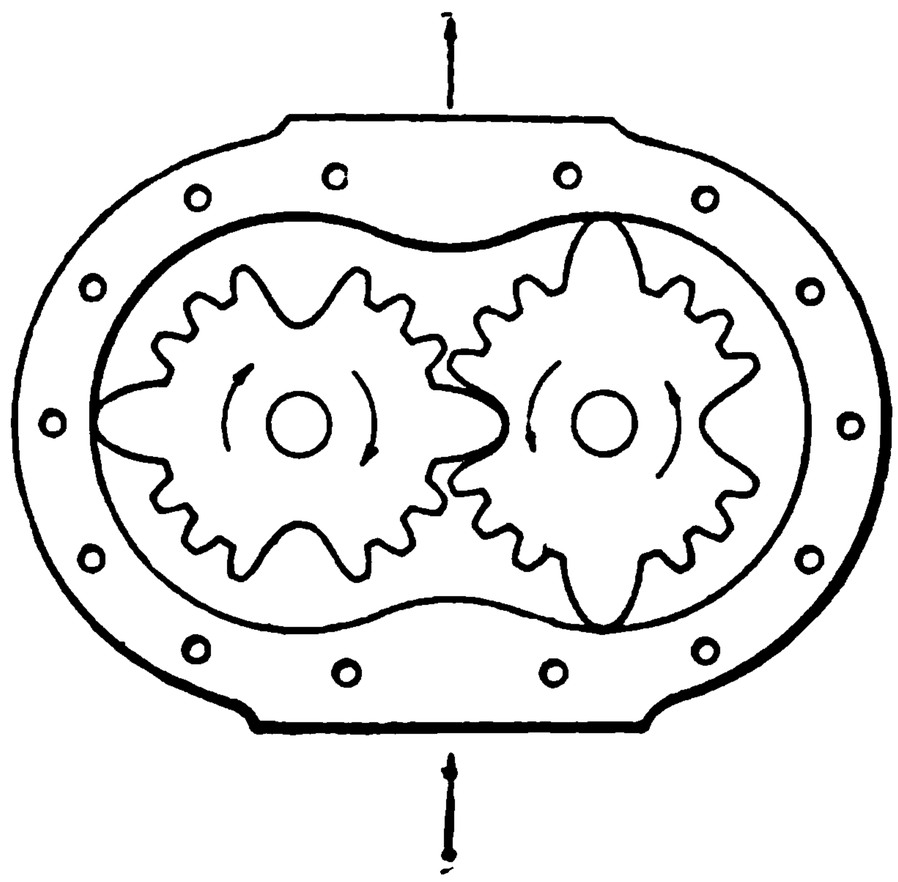

Fig. 62. Operation of Gear Type of Water-Circulating Pump.

metallic surfaces to make the joint tight against water or steam or whatever the circulating fluid may be. These compressible pieces are called *gaskets*. In steam-engine practice, gaskets are usually made of rubber or some composition of rubber, asbestos, and cotton. Owing to the high temperatures of gas engines, rubber composition gaskets are not so satisfactory as metallic gaskets.

Fig. 64 shows types of copper-asbestos gaskets made by McCord & Company, Chicago.

In emergencies, gaskets are easily made out of any stiff brown paper covered with graphite. The addition of graphite to a stiff brown paper makes the paper quite brittle; and in fitting it to the

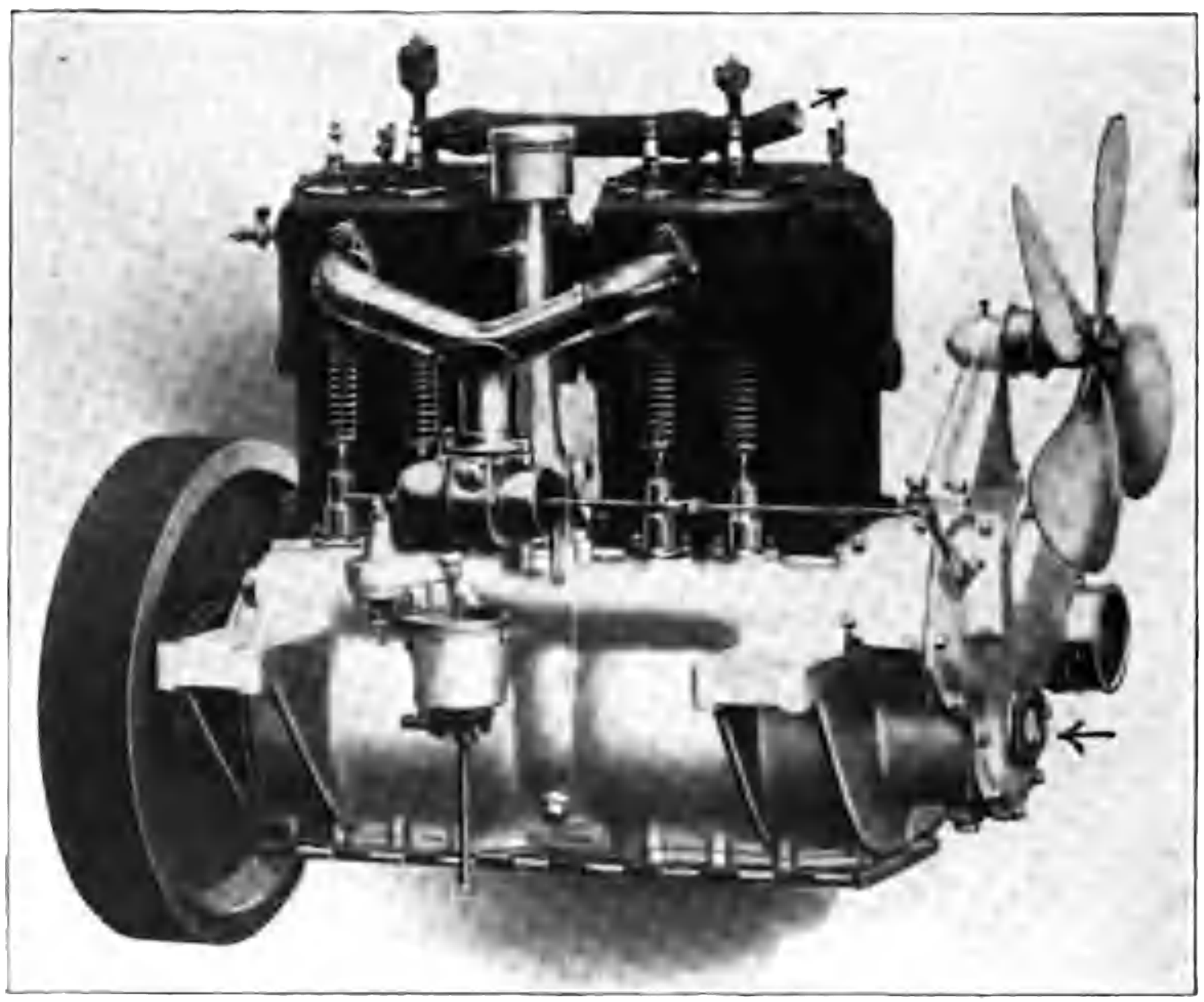

Fig. 63. Peerless Engine, Showing Cooling Pump and Fan. Peerless Motor Car Company, Cleveland, Ohio.

Purchase full membership to immediately unlock this page

HISTORY

Tens of thousands of important historical sources, many previously unobtainable, are now available for the first time with a Forgotten Books Full Membership.

Unlimited Access
$8.99/month

Continue

*Fair usage policy applies

coated with silicate of soda, and allowed to dry thoroughly. The gasket should then be soaked in the soda (if it is of asbestos or asbestos composition), and allowed to dry partially. If of paper and a temporary makeshift, it should be coated with graphite. Place the gasket on the cylinder, put the head in place, and tighten the studs and nuts. In doing this, be careful to distribute the pressure evenly—that is, tighten each stud and nut only a little at a time, until they have all been set home. After doing this, start the engine, and allow it to run one or two minutes without water in the tank. Stop it, tighten the studs and bolts again, and fill the tank with water. Do not use too long a wrench in tightening, and do not use too much force at once.

Overheating of Engine. When overheating occurs, everything begins to rattle and knock. You have premature ignition. It makes a "pinging" sound. The mixture ignites from the heat, instead of from the spark. If allowed to continue running when overheated, the engine will transmit its heat to oil in the cylinders, and if hotter than the burning point of the oil, the oil will burn and its odor will be noticed. Steam will be seen emanating from the cap of the radiator. The car will lose power and slow up. Overheating causes expansion of the piston, while at the same time all the parts become weaker and liable to distortion.

When overheating is noticed, the best thing to do is to shut down and let the parts cool off. In the case of an air-cooled engine, this is all that can be done; and after starting again, be sure that your mixture is not too rich or too plentiful. Before starting, disconnect the spark-plugs, and crank the engine a while so as to draw cool air through the cylinders. In the case of a water-cooled engine, some people would advise running the engine with spark well advanced, throttle closed, and engine free. This would cause rapid circulation of the water, which has previously been cooled by drawing off a part of it and putting in some cold water. This would be the course to pursue in case the overheating had been caused by working the engine too hard, and not because of lack of water. If water has all been used up, or if radiator and jackets are full of steam, avoid causing a sudden chill by pouring in cold water. Such a chill is likely to cause cracking of parts.

Other causes of overheating are found in defects in the water-

circulating system, such as the failure of the pump to work, the presence of some obstruction in the water pipes, such as a piece of solder, or a leak in the water line. Overheating is also sometimes due to too rich mixture in the carbureter. A strainer should always be used in pouring in water, so as to prevent any dirt or grit getting into the pump or pipe-line.

A piece of rubber tubing is useful to carry as a temporary repair to leaks.

What is known as an *air-lock*, caused by air-bubbles in the pump, may impede water circulation. The remedy for this is to let the water flow out, and to keep pouring in new water.

Steaming Radiators. If the water in your radiator manifests a disposition to boil, and the gathering steam blows the filling cap off, do not try to cure the trouble by using an extra supply of solder on the cap. The pump or its driving connection may be broken; or a pipe or strainer may be clogged by waste or by a chance stone; or the carbureter may be feeding an excessively rich mixture; or there may be oil in the radiator, preventing contact of the water with the cooling metal surface.

Care of Water-Cooling System in Cold Weather. In freezing weather, it is very important that the engine be not stopped while the car is left out in the open; and that when the car is put away in its storage place for the night, all the water be drained out if exposed to freezing temperature, unless the circulating system is filled with a non-freezing mixture. There are various kinds of non-freezing mixtures on the market. Good mixtures can be made in the following ways:

1. A 50 per cent solution of wood alcohol.
2. Put 10 lbs. of chemically pure chloride of calcium and a handful of unslaked lime into a pail of water. After this preparation is carefully mixed and dissolved, pour into the radiator or tank through a strainer.
3. A 40 per cent solution of glycerin and water.

GASOLINE SYSTEM

The gasoline or fuel system consists of the *gasoline tank*, which is sometimes provided with a reserve or emergency chamber, and usually with a dirt or sediment chamber; *piping*, leading to mixer or carbureter; the *carbureter* itself, which will be described more fully

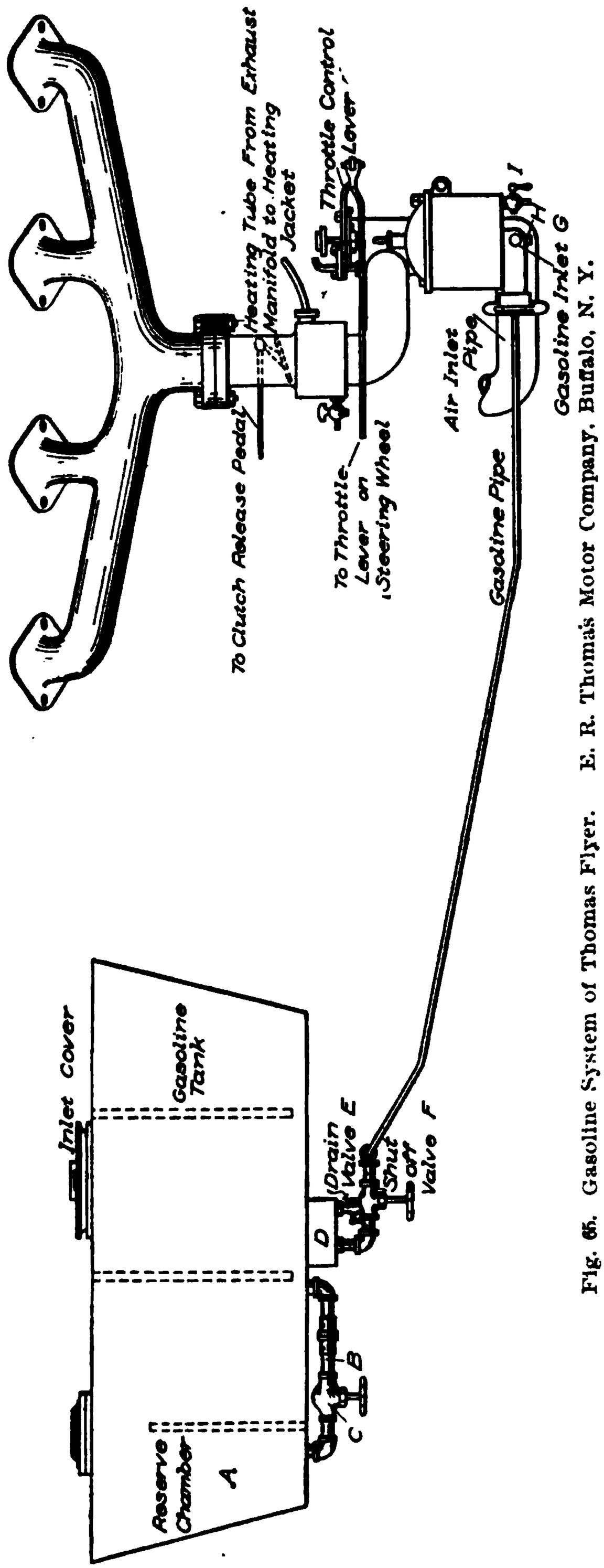

Fig. 65. Gasoline System of Thomas Flyer. E. R. Thomas Motor Company, Buffalo, N. Y.

in detail; and pipes leading from the carbureter to the valve-chambers of the engine, the piping being provided with necessary cocks and control valves.

Fig. 65 shows the gasoline system of the Thomas Flyer, made by the E. R. Thomas Motor Company, Buffalo, N. Y. The *gasoline tank* is placed under the forward seats, and contains twenty gallons. On the extreme left of the tank, a *Reserve Chamber* (*A*) is partitioned off. It is connected by a pipe *B* to the main chamber. The valve *C* in this pipe should be kept closed until it is necessary to admit the gasoline in the reserve chamber, which holds one gallon. The *sediment and water receptacle* (*D*) is shown at the bottom of the tank, which is drained by the valve *E*. There is also a shut-off valve in the line to the *carbureter* (*F*), which should be closed after the day's run, so as to cut off the

Purchase full membership to immediately unlock this page

DELVE INTO FANTASY, MAGIC, MYTHOLOGY & FOLKLORE

Forgotten Books' Full Membership gives access to 797,885 ancient and modern, fiction and non-fiction books.

Continue

*Fair usage policy applies

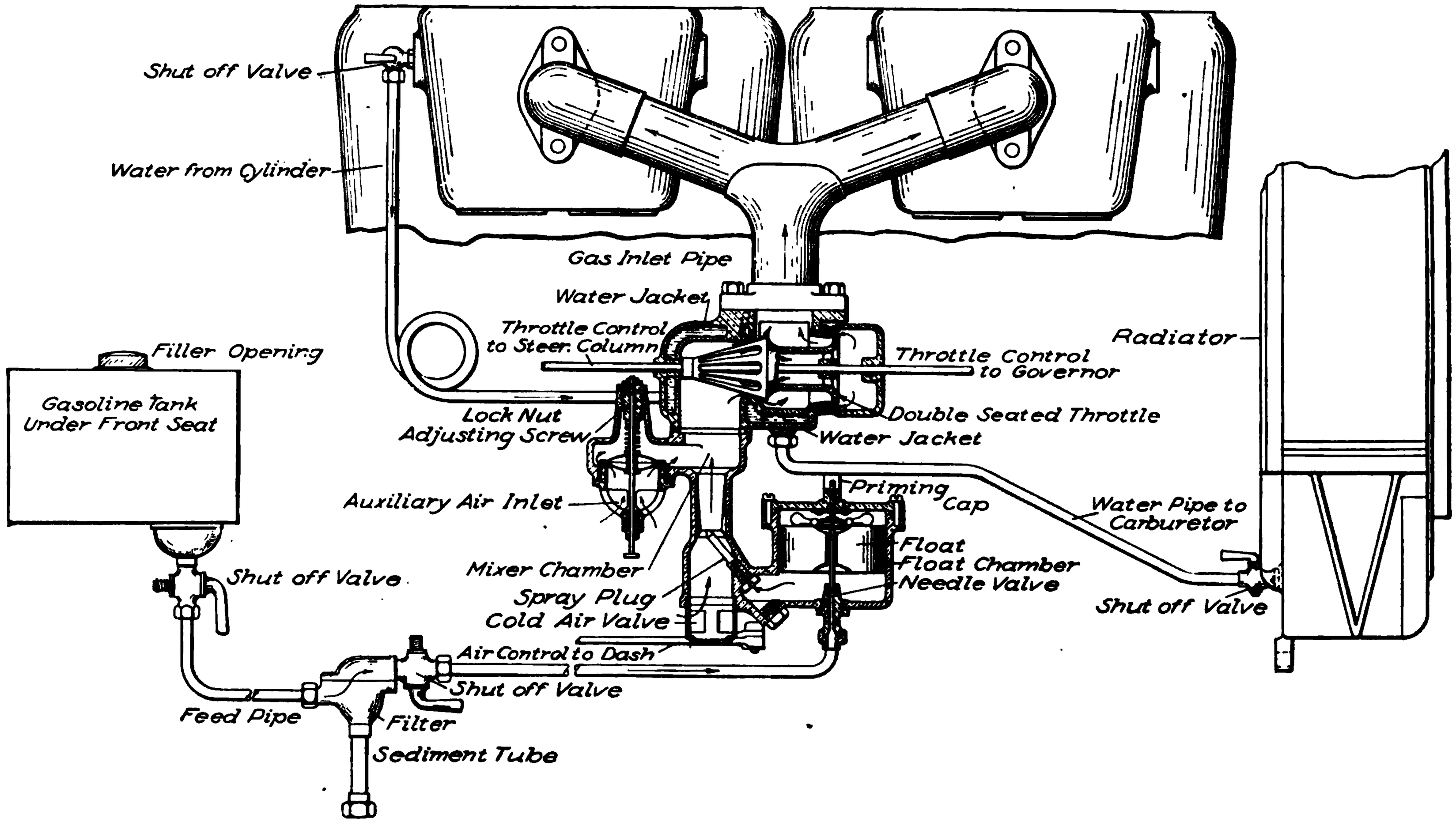

Fig. 66. Gasoline System of Peerless Car. Peerless Motor Car Company, Cleveland, Ohio.

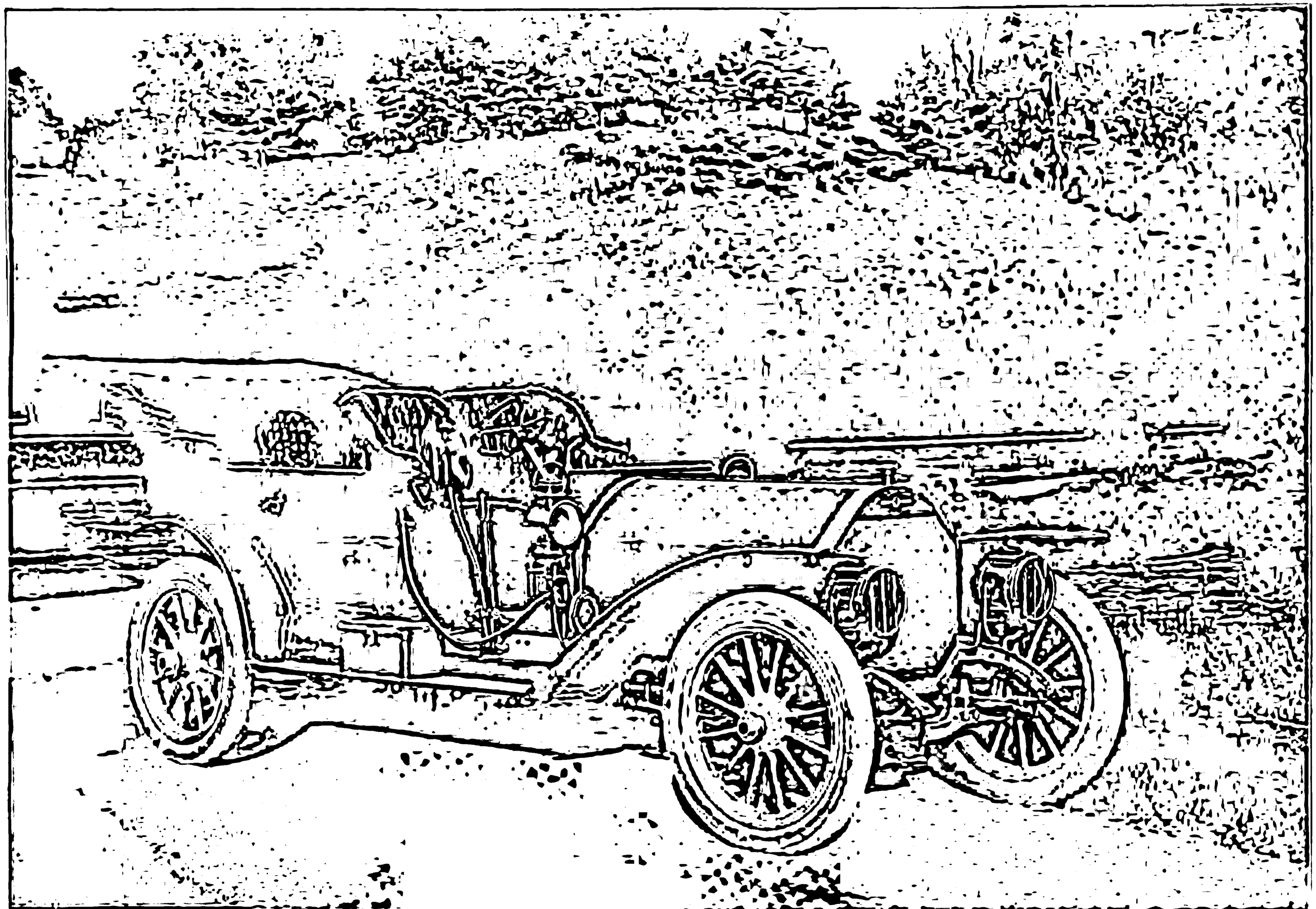

Purchase full membership to immediately unlock this page

HISTORY

Tens of thousands of important historical sources, many previously unobtainable, are now available for the first time with a Forgotten Books Full Membership.

Unlimited Access
$8.99/month

Continue

*Fair usage policy applies

Having once adjusted the carbureter for making a proper mixture for a certain kind of weather, the action of the carbureter itself must be automatic in maintaining this mixture under all varying conditions of engine speed and load. This self-regulation to maintain the proper mixture, is attempted in different ways in different carbureters.

Fig. 67. Carbureter of Cadillac Single-Cylinder Car, Spring-Operated, without Float-Chamber. Cadillac Motor Car Company, Detroit, Mich.

The Cadillac Motor Car Company, Detroit, Mich., regulates it by means of spring action in a carbureter that is very simple, without any float-chamber.

Fig. 67 shows a section of this carbureter. Its action is as follows:

The air is taken in at the end of the inlet pipe *K*. The intake of the air caused by the suction of the piston lifts the valve *L* and forms a partial vacuum at the terminal of the gasoline passage *M*, the screw *N* being adjusted so as to allow the valve *L* to lift from its seat just far enough to admit the proper amount of gasoline to form with the in-going air the proper mixture. The adjusting screw *N*, which regulates the amount of gasoline, should be adjusted only in case of improper mixture.

To secure the greatest efficiency, the mixer valve (which admits the gasoline into the carbureter) must open wider when the engine is running at high speed than is necessary when running at low speed.

The method of this adjustment is shown in Fig. 68. When the adjusting screw is located as shown in *A*, the spring *Q* cannot act; hence the adjustment needs to be changed. In Fig. 68, *B* shows the spring free to act to its full limit. With this adjustment it will be found that when the engine is running at low speed, the needle-valve moves so slowly that it has not sufficient momentum to cause the spring to yield. When, however, the speed increases, the volume of air comes against the diaphragm of the valve at a more rapid rate, and causes the needle *L* to strike against the spring *Q* with such force as to make it yield, thus allowing the mixer valve *L* to open wider at this high speed than it did at low speed. Under these con-

ditions there is too much spring action, allowing the valve *L* to open too wide, and making the mixture too rich at high speed.

In this case the binder *P* must be adjusted so as to bring the adjusting screw *N* to the position shown in *C*, Fig. 68, giving less spring action than in *B*, and more than in *A*. By a little experimenting, the adjusting screw can be located in a position where it will allow sufficient spring action to give the desired mixture at both high and low speeds. The adjusting and experimenting should be done with the throttle wide open and with the spark-lever away back, so that firing does not take place ahead of dead center.

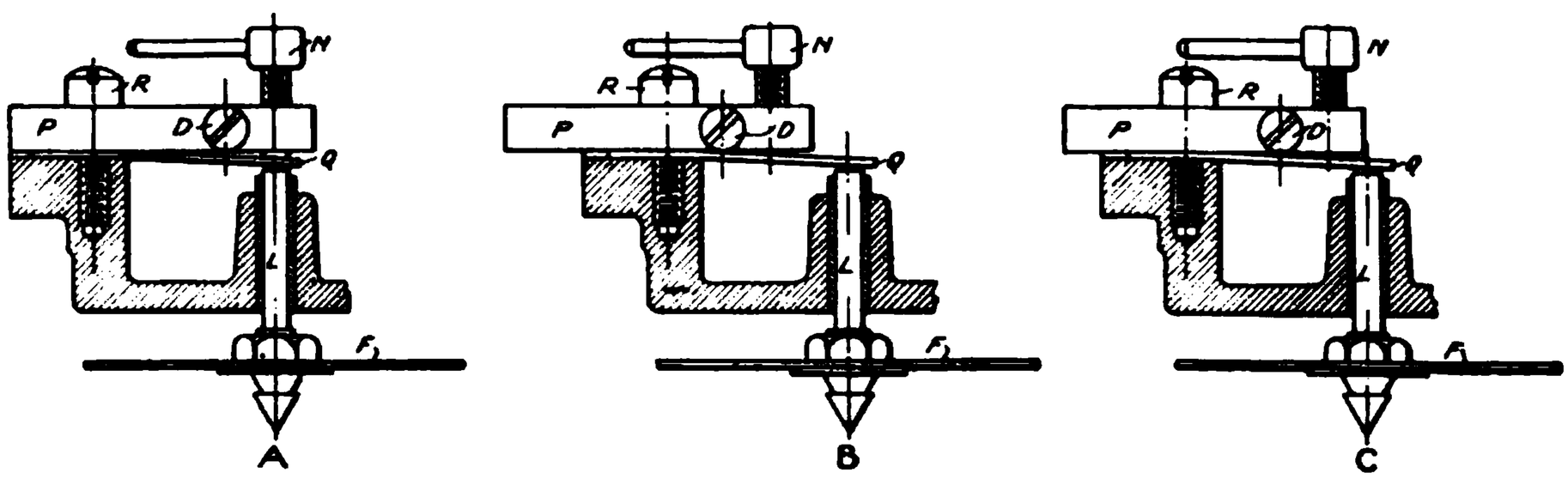

Fig. 68. Showing Adjustment of Spring Regulating Cadillac Carbureter. Cadillac Motor Car Company, Detroit, Mich,

The *float-feed* type of carbureter is very generally used; and a great many makes are on the market, with slight variations.

Fig. 69 is a section of this type of carbureter as used by the National Motor Vehicle Company, of Indianapolis. It is attached to the gasoline inlet line at the side of the engine, by an S-shaped brass pipe and flange. The *float-chamber B* of the carbureter contains a float *F*, which float actuates the gasoline inlet valve *H* by means of the float-lever *I* hinged at *J*. As the float-chamber fills with gasoline admitted through the inlet valve from the pipe-line leading to the gasoline tank, the float rises until it reaches a predetermined level, at which time it closes the inlet valve *H* through the action of the lever *I*. It will thus be seen that the connection to the gasoline tank is normally closed until the gasoline level falls sufficiently to cause the float to drop and operate the lever, thus permitting more gasoline to enter the chamber *B* until the normal level is again restored. The suction of the piston during the admission stroke of the engine creates a partial vacuum in the entire admission line, and this suction draws the gasoline through the spraying nozzle *D*. The

amount of gasoline passing through the nozzle is regulated by the needle-valve lever *E*. The gasoline jet from the nozzle passes into the mixing chamber *C*. The quantity of air entering into the mixing chamber is controlled by the compressing air-valve *A* adjusted against the spiral spring *O* by means of the adjusting screw *M*.

It will thus be seen that the mixture can be regulated as to quantity both of gasoline and of air, each being independently regulated.

The quantity of mixture which goes to the engine is controlled by the throttle-valve *K*, which is simply a metal disc turned by means of the lever *P*, to which is attached the rod system leading to the operator at the front seat.

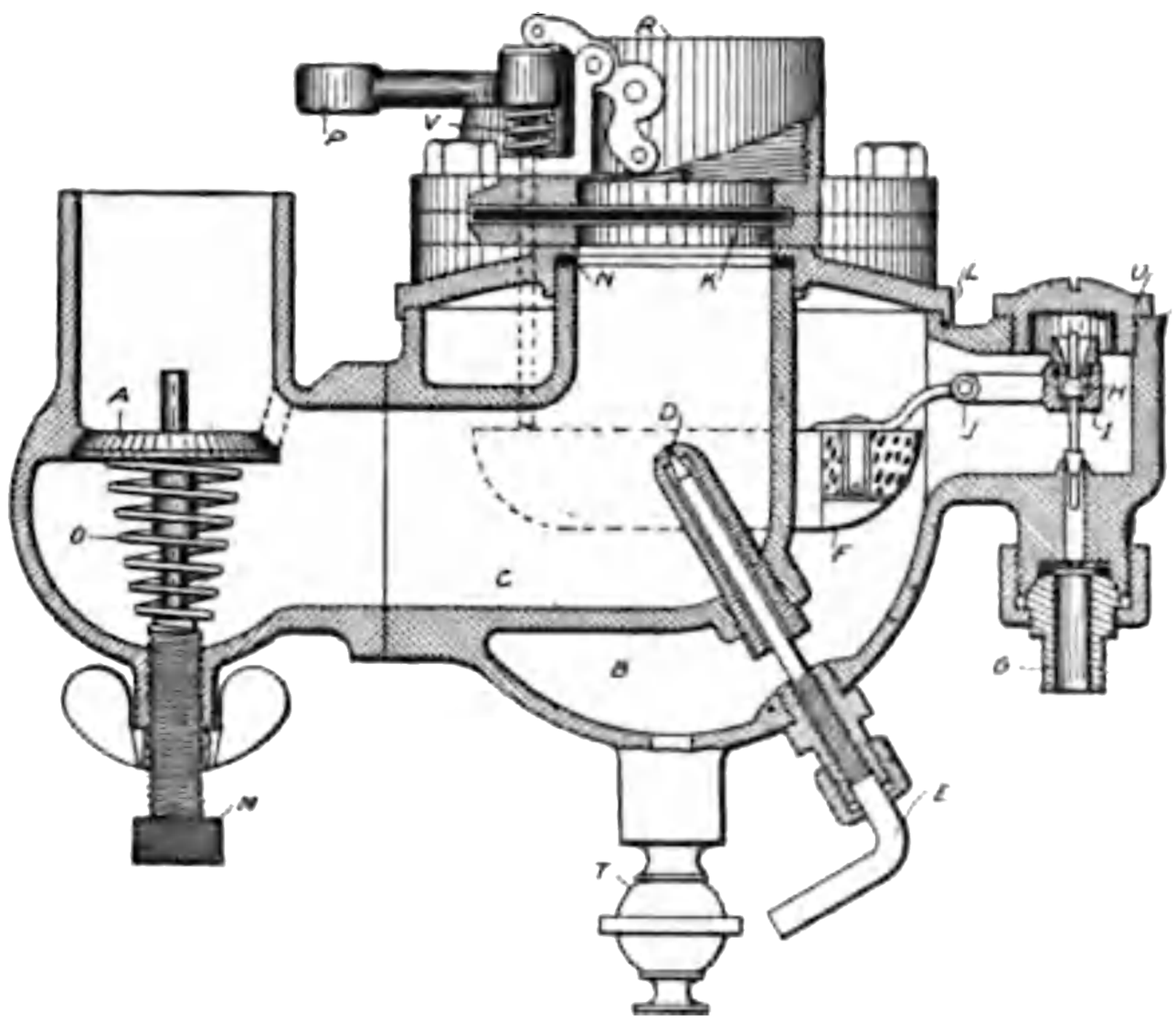

Fig. 69. Float-Feed Type of Carbureter, with Hand Regulation of Gasoline at *E* and of Air at *M*.
National Motor Vehicle Company, Indianapolis, Ind.

The proper mixture is obtained by adjusting the needle-valve *E*, which need be opened but slightly—usually only about three-fourths of a turn. If, when the cylinder relief-cocks are opened, black smoke and flame are observed, the mixture is too rich. After a bluish flame has been obtained, and the firing is regular, open the throttle-valve gradually. If the engine runs at low speed and fires regularly, but misses on high speed, tighten the tension on spring behind automatic air-valve, by screwing in the adjusting screw *M* until the engine fires regularly on all speeds and no black smoke is seen coming out of the exhaust.

Flooding of the carbureter will be indicated by the stopping of the engine when running, or by the gasoline running out of the carbureter when the engine is standing still, and is due to the float sticking and its not closing the inlet valve to the carbureter *H*. This can be remedied by taking off the carbureter after shutting off the

Purchase full membership to immediately unlock this page

DELVE INTO FANTASY, MAGIC, MYTHOLOGY & FOLKLORE

Forgotten Books' Full Membership gives access to 797,885 ancient and modern, fiction and non-fiction books.

Continue

*Fair usage policy applies

Proper Mixture of Gasoline and Air. If the mixture is too weak in gasoline, the running will be affected. Explosions will be missed. If the mixture is too strong, the engine will fail to speed up. The action will be sluggish. It will not pull.

If the mixture is too rich, one can tell it from the presence of explosions in the muffler; from the very dense smoke, which is black; and from the sluggish action of the engine. Smoke caused by too

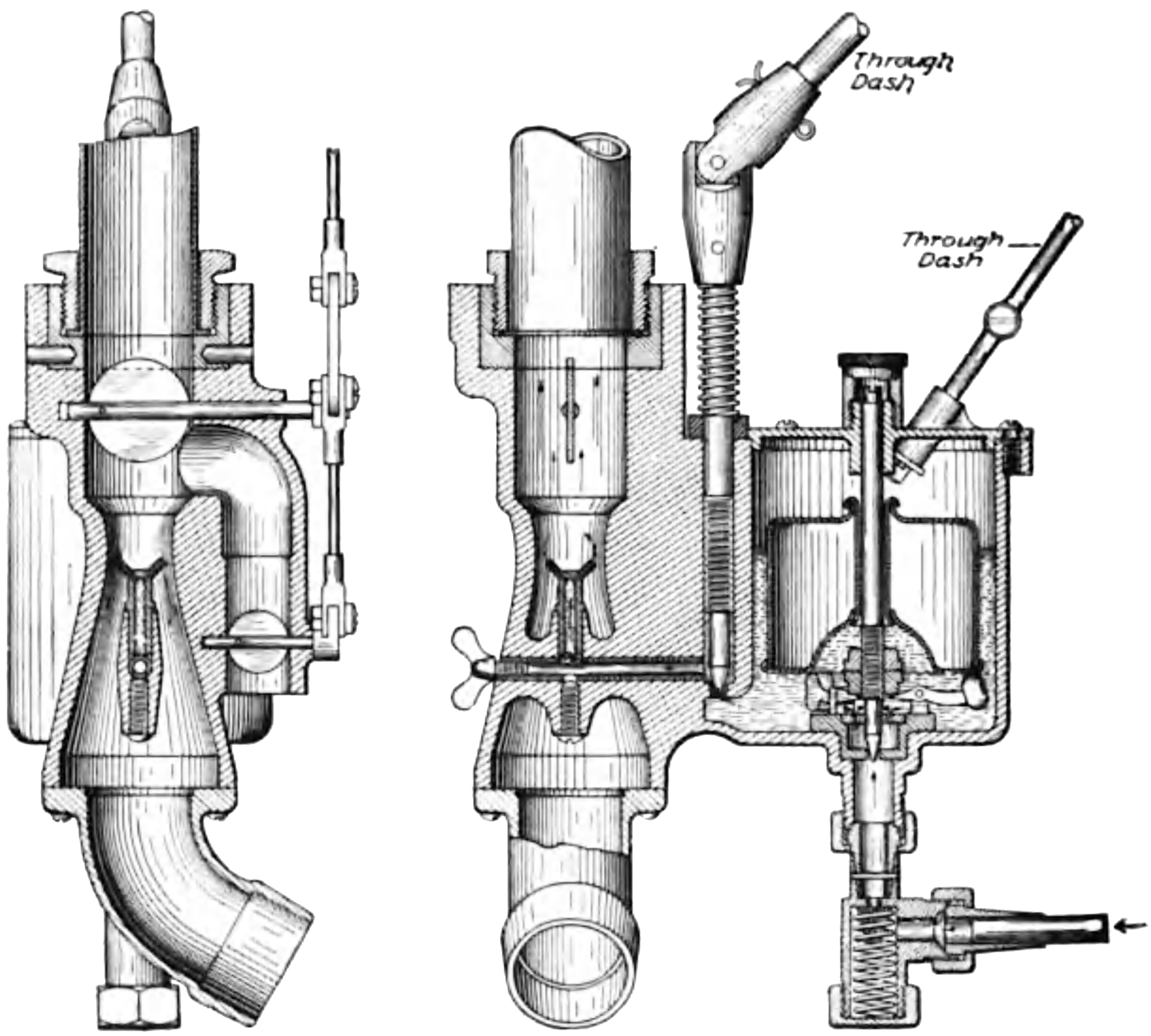

Fig. 70. Carbureter of Compensating Type, Admitting Increased Supply of Air as Speed of Engine Increases.
H. H Franklin Manufacturing Company, Syracuse, N. Y.

much oil is blue, entirely different from the smoke caused by too much gasoline.

In the case of a weak mixture, if it fires at all, it will make a pop in the carbureter, caused by the fact that a weak mixture will light readily in open air, but will not light well under compression. Popping back in the carbureter is caused by late spark or weak mixture. An engine with a very high compression will require a richer mixture than one having less compression.

Textbooks on gasoline engines usually make the statement that gasoline will ignite in a range of mixtures varying from one part by weight of gasoline to eight of air, up to as weak a mixture as one of gasoline to sixteen of air. However, there is no gauge about the automobile or carbureter by which one can gauge the relative weight The only way to determine what is a proper mixture is by observing closely the action of the engine, supplying sufficient gasoline until indications of a rich mixture show themselves, as indicated above. Then slightly diminish the gasoline, until the condition of best running is secured.

DIRECTIONS FOR CONNECTING AND ADJUSTING A CARBURETER TO A MOTOR

1. Connect to the intake pipe on motor, as close to inlet valve as convenient, provided the motor does not overheat. The carbureter should not be placed where it will get hot, as this would change the quality of the mixture; but the closer you connect the carbureter to the inlet valve, the quicker the motor will respond to the throttle.

2. Great caution should be used to avoid traps or pockets of any description in pipe between carbureter and motor, or at low speed the fuel will condense and settle in such traps, and when the throttle is open for high speed the increased velocity of air through pipe will pick up this accumulation of fuel and cause smoke and trouble until pipe is clean.

3. Connect gasoline fuel to float-cup, with head enough to fill the cup. It is best to use brass pipe and fittings for gasoline, if convenient, as iron pipe is liable to rust and scale, which may clog inlet valve to carbureter and cause trouble.

4. Arrangements should be made to filter or strain all gasoline when filling tank, as it is very sure to contain some dirt or foreign substance collected from cans and barrels in handling.

5. When float-chamber is filled, screw needle-point down to seat; set the throttle very nearly closed for low speed; open needle about one-eighth of a turn; then try the motor with igniter in good working condition. When the motor starts, change the adjusting screw until you get a perfect mixture at low speed and no smoke (be sure you have it right at low speed); then lock adjusting screw in position with clamp.

6. Open the throttle by lever, and the motor will speed up under the proper mixture. Throttle may now be opened or closed at will, and no further adjustment will be required, except perhaps for a change of fuel.

7. Do not try to start your motor with the throttle wide open when you have an adjustment for low speed; but start it with throttle closed for low speed, which you can do very easily, as you can turn it at about the slow-running speed yourself, while, if you were to start with the throttle wide open, it might be necessary to flush the carbureter in order to get the fuel rich enough to start with at the speed you would be able to turn it over. This is why

nearly all float-feed carbureters have to be flushed for starting; they have no slow-speed adjustment.

8. On a motor controlled by throttle, the spring on the exhaust valve should be made stronger than is necessary with a motor drawing a full charge at all times; otherwise the partial vacuum created in the cylinder at low speed, owing to the light charge admitted, may unseat the exhaust valve and dilute the charge.

Sometimes water gets into the carbureter, and its contents must then be emptied. This is a point worth remembering in starting a car that has been standing in a heavy rain.

Sometimes the float will stick in the carbureter, and then needs to be cleaned.

A carbureter should be used that has a drain-cock for taking out water.

It is very advantageous to have hot air for the air-intake. This is provided for by having the air-intake pipe end in a wide-flared mouthpiece close to the hot exhaust pipe of the engine.

Leaky Float-Valves. There is neither sense nor profit in neglecting to keep the float-valve of the carbureter tight. The effect of a leaky valve may not be very marked in cold weather as regards the quality of the mixture; but in warm weather, when the gasoline evaporates more readily, the leaking may make the mixture so rich as to make it impossible to start the motor unless the gasoline is turned off at the tank immediately on stopping. The best thing with which to grind-in the float-valve is pumice-stone. Emery is too hard, and it imbeds itself in the stem or seat of the valve, making trouble later on.

Purchase full membership to immediately unlock this page

HISTORY

Tens of thousands of important historical sources, many previously unobtainable, are now available for the first time with a Forgotten Books Full Membership.

Unlimited Access
$8.99/month

Continue

*Fair usage policy applies

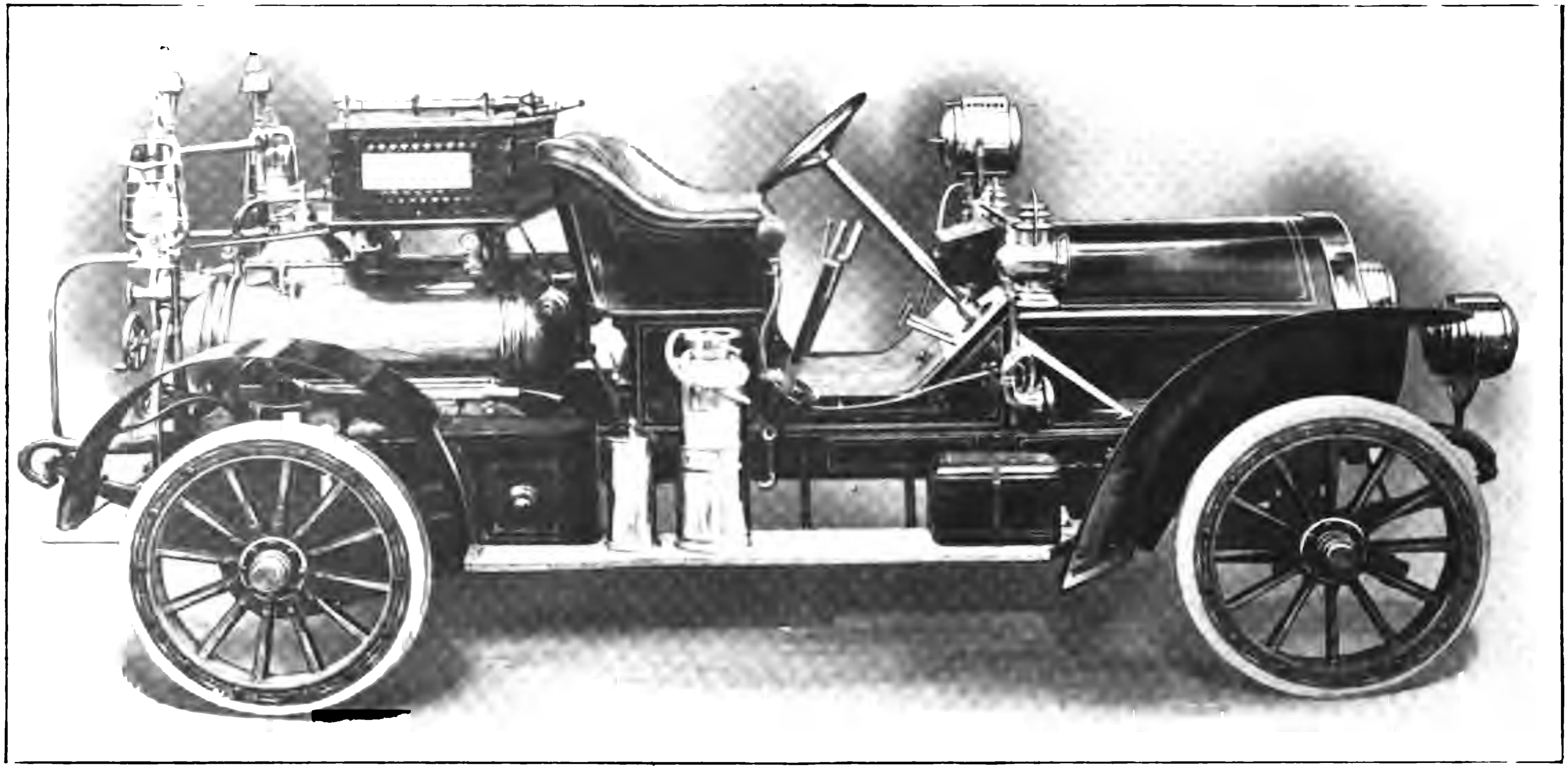

AUTOMOBILE CHEMICAL FIRE ENGINE.
Knox Automobile Company, Springfield, Mass.

AUTOMOBILES

PART II

IGNITION SYSTEMS

As the result of many years of experimenting with various systems of ignition of the explosive vapor in gas engines, the following conclusions have been definitely reached:

A single spark is not reliable enough to be depended on. The explosive mixture sometimes fails to ignite from the first spark, and the ignition spreads slowly. Hence the aim of the most reliable devices on the market is to produce a series of very rapidly recurring fat sparks of high electromotive force, continuing through a period of time representing from five to ten degrees angular rotation of the fly-wheel, with devices for changing the period of sparking time so that it occurs earlier or later in the mechanical cycle of the engine—that is, earlier or later in the stroke. (Really the igniting period is usually at the end of the compression stroke, with adjustment making it possible to transfer part or all of it past the dead center or a little after the beginning of the pressure or explosion stroke).

DRY-CELL AND JUMP-SPARK SYSTEM OF IGNITION

The simplest ignition system, and the one in general use on light runabouts, is the *Dry-Cell and Jump-Spark System.* A diagram of this system is shown in Fig. 71, which shows the ignition system of the Cadillac single-cylinder automobile.

In the center of the diagram are shown two sets or batteries of dry cells, *aaaa* and *bbbb*. Two sets of dry cells are used, simply so that if one set grows weak the other set may be put into service. Care must be taken in re-wiring to see that the current flows in the same direction in each battery, This can be determined by tracing the direction in which the current should flow. Taking for instance the diagram, when the switch *F* is closed in either direction, it completes an electrical circuit between one terminal of either battery and the metal frame of the car, as terminal *F* of the switch is electrically connected by a wire to the metal frame of the car. The commutator *P* has also one terminal electrically connected to the frame of the car. Following the current now, starting at *aaaa*, it flows through

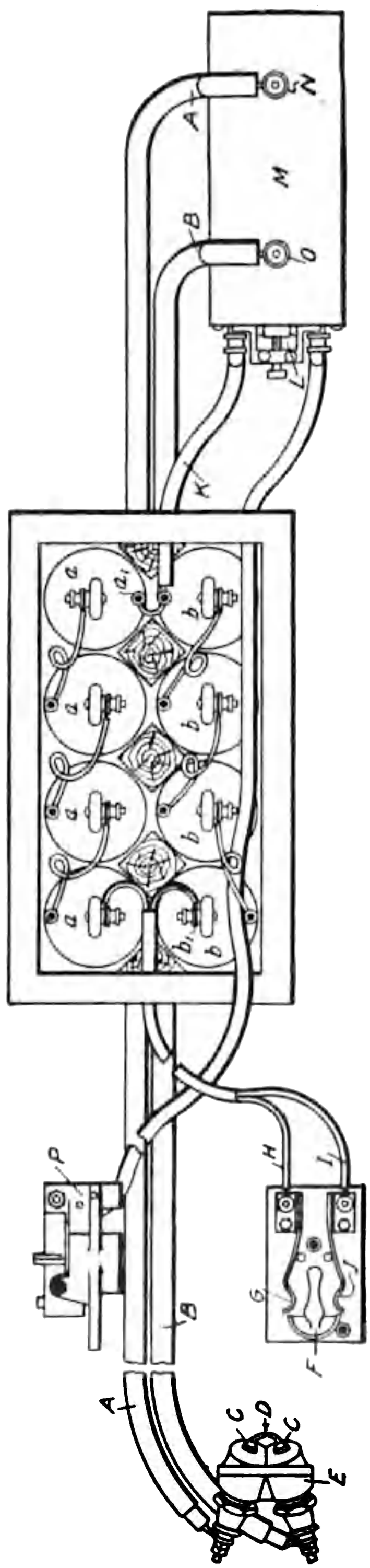

Fig. 71. Connections for Dry-Cell and Jump-Spark Ignition System for Single-Cylinder Engine, Cadillac Motor Car Company, Detroit, Mich.

H, and through the closed blade of the switch *F*; thence through the metal frame of the car to the commutator; and at such time as the metal contact of the commutator is closed, it passes from the commutator through the spark-coil or vibrator, entering at *L* and leaving at *K*. This completes what is known as the *primary circuit*. The reason it is called the primary circuit is that terminals *L* and *K* in the spark-coil are connected to the primary winding of the spark-coil. Wires *A* and *B* complete a circuit between the secondary winding of the spark-coil and the spark-plug *E*.

At *L* on the coil, there is a magnetic circuit maker and breaker, called the *trembler* or *vibrator*, which, when properly adjusted, makes and breaks the circuit through the primary winding of the coil, so long as the primary circuit is complete everywhere else. The action of the vibrator is continuous; that is, if the engine is not in motion and the battery circuit is closed, by closing the switch and bringing the metallic part of the commutator into contact with the circuit, there will be an uninterrupted humming of the coil. As soon as the engine is started, however, the make and break of the commutator, which is mechanically driven by the engine, causes intervals in the period of

Purchase full membership to immediately unlock this page

DELVE INTO FANTASY, MAGIC, MYTHOLOGY & FOLKLORE

Forgotten Books' Full Membership gives access to 797,885 ancient and modern, fiction and non-fiction books.

Continue

*Fair usage policy applies

the soft iron piece fastened to the spring, which has also served as a conductor between *D* and *C*. As soon as the spring is drawn down, the circuit through the magnet is broken; and the magnet being demagnetized, the mechanical return action of the spring draws it back again. As soon as it has sprung back far enough to touch the point of the contact-screw *C*, the original action is repeated. It will be noted, therefore, that the rapidity of action of the make-and-break mechanism depends on the adjustment of the spring and contact-screw.

Adjustment of Spark-Coil. The faulty adjustment of a spark-coil is apt to cause a great deal of trouble. Among the troubles which may be caused are: *Short life of batteries, burned contacts of the coil,* and *poor running of the engine.* The color of the spark at the length of $\frac{1}{16}$ inch should be a bluish purple. With an accurate adjustment, this characteristic color will be in evidence. In making adjustments, remove first the vibrator contact-screw *C*. Then adjust the vibrator spring so that the hammer or piece of iron on the end of this spring stands normally about $\frac{1}{16}$ inch from the end of the coil. Then insert the contact-screw *C*, and screw it in until it just touches the platinum contact on the vibrator spring. Be sure that it touches only very lightly. Screw down the spring-adjusting screw *D* until, when the circuit is closed, the vibrator rings with a high-pitch tone. Then start the engine. Then gradually release the spring-adjusting screw and contact-screw until that cylinder begins to miss fire. Then tighten up both screws just a trifle at a time, until the engine will run without missing explosions.

Fig. 73. Dash Coil for One-Cylinder Engine. Cover Removed. The Splitdorf Laboratory, New York City.

It is common practice to adjust vibrators so that the spring gives a high, clear tone, and to draw the longest possible spark. This practice is extremely wasteful of battery force; and since it increases the tension of the current passing through the vibrators, the platinum contacts wear out rapidly, causing them to stick and the engine to miss fire. A happy medium can be learned by careful observation while adjusting the screws.

Figs. 73, 74, and 75 illustrate typical spark-coils. Fig. 73 shows a Splitdorf dash coil for a one-cylinder engine, the cover being removed; Fig. 74 shows a dash coil of the same make for a two-cylinder engine, one of the units being removed from case; and Fig. 75 shows a Splitdorf three-cylinder dash coil, also with cover removed.

Fig. 74. Dash Coil for Two-Cylinder Engine. Cover Removed. Also note removable unit.
The Splitdorf Laboratory New York City.

Fig. 76 shows the principles involved in the wiring of a typical two-cylinder engine using dry-cell and spark-coil ignition. *A* and *B* are two batteries, each consisting of three cells. The three cells of each group are connected in series. *C* is the *spark timer* or *commutator*, which is controlled by the spark-lever so that the sparking may be made to occur earlier or later during the stroke of the piston. The shaft shown at *D* on the diagram is really the shaft *E*. Since the commutator is actually attached to the motor, it is shown separately in the diagram for clearness in showing the wiring connections. *F* is grounded to the motor frame, while *G* and *H* are both insulated

Fig. 75. Dash Coil for Three-Cylinder Engine.
The Splitdorf Laboratory, New York City.

from the motor frame. By the rotation of shaft *D*, which carries the commutator, the current is first permitted to flow between *F* and *G* when these two terminals are brought into contact by friction with the metallic periphery of the commutator. As the commutator continues to revolve, the fiber portion of the periphery advances between *F* and *G*, breaking the circuit between those two terminals. Meanwhile metallic circuit has been established between *F* and *H*. From these points current flows through the spark-coil, and sparks are caused alternately in the spark-plugs *K* and *L*. The switch key *N* shown in the center of the diagram is located on the dash. It will be seen by the connections, that either one or the other battery of dry cells may be connected at will. When the switch key is in the position shown, the battery *B* is in use; and when the switch key is over *P*, the battery *A* is in use.

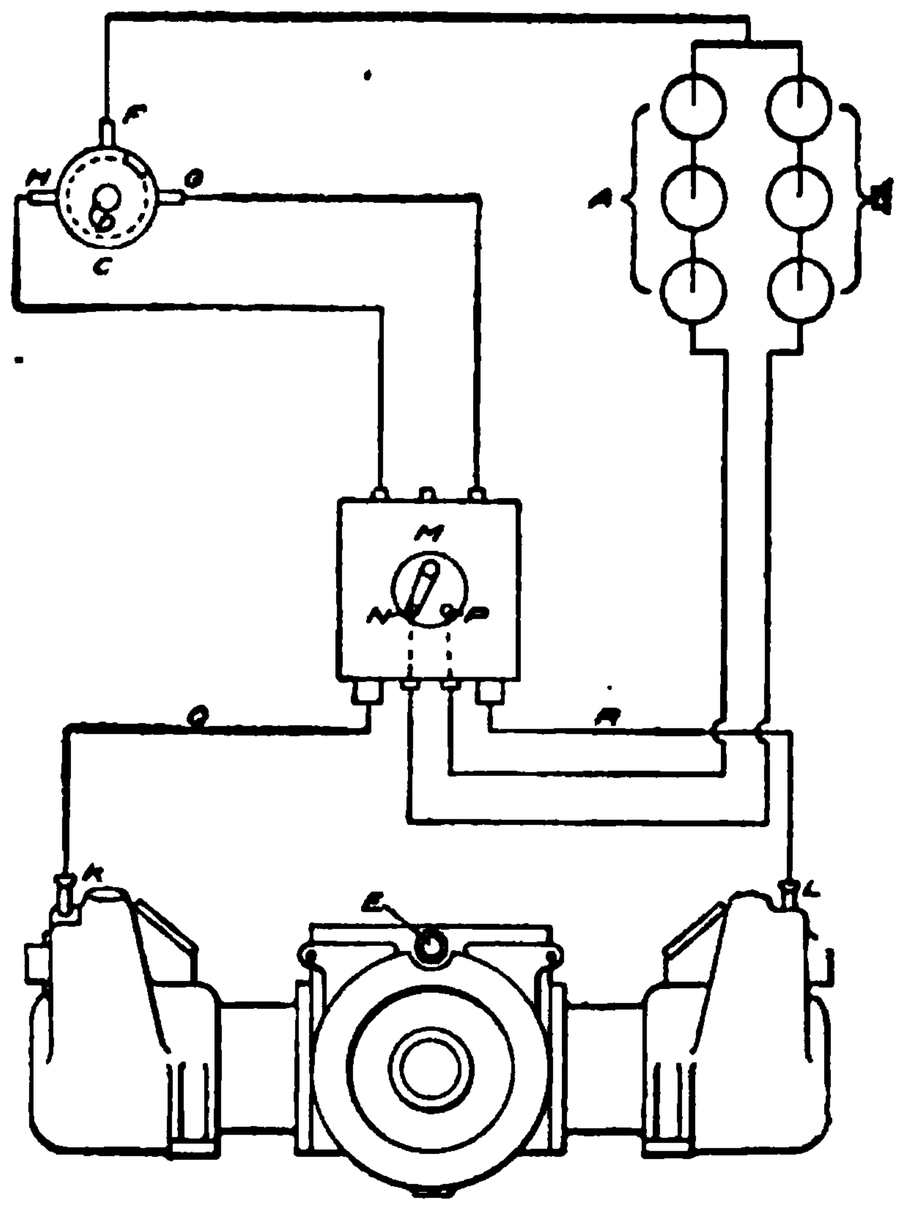

Fig. 76. Wiring Diagram for Two-Cylinder Engine Using Dry-Cell and Spark-Coil System for Ignition.

When it is desired to leave the car, or to use the engine compression as a brake, the switch key is either removed or placed in the middle or neutral position, and the electrical circuit is broken, so that no spark will occur, and hence the motor cannot be started until the key is replaced.

Wires *Q* and *R* connect the spark-plugs to the secondary or high-tension winding of the spark-coil, and are heavily insulated.

Fig. 77 is a wiring diagram for a four-cylinder engine, which is provided not only with dry cells but also with a storage battery. Otherwise the connections and operation are like the systems already explained for one-cylinder and two-cylinder engines respectively.

DIRECT-CURRENT SHUNT-WOUND DYNAMO SYSTEM

Dynamos for Charging Batteries for Ignition. For the purpose of utilizing the power of the gasoline engine to charge the storage

Purchase full membership to immediately unlock this page

HISTORY

Tens of thousands of important historical sources, many previously unobtainable, are now available for the first time with a Forgotten Books Full Membership.

Unlimited Access
$8.99/month

Continue

*Fair usage policy applies

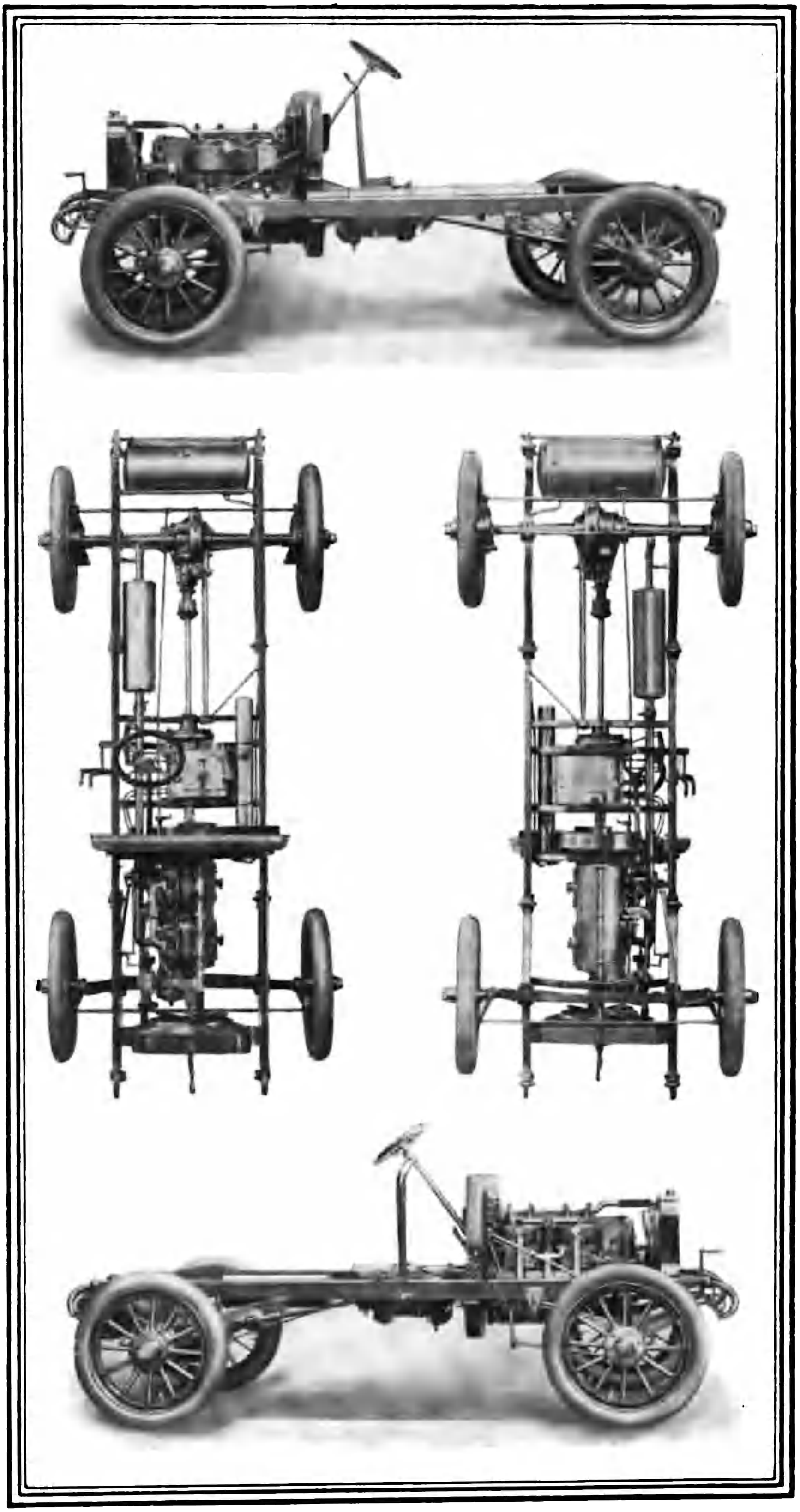

GROUP OF MODEL K CHASSIS
The Winton Motor Carriage Co.

batteries used for ignition, there are several makes of direct-current dynamos on the market. These dynamos are driven either by a belt from some moving shaft; or by a gear mounted on the commutator shaft of the gasoline engine, meshing with a gear on the armature shaft of the little dynamo; or by meshing of the gear on the dynamo shaft with teeth cut into the engine fly-wheel. The connection should never be made by the use of thin gear rings screwed onto the engine fly-wheel, as the centrifugal force when the engine races for even a few revolutions is apt to burst the gear rims at the thin part.

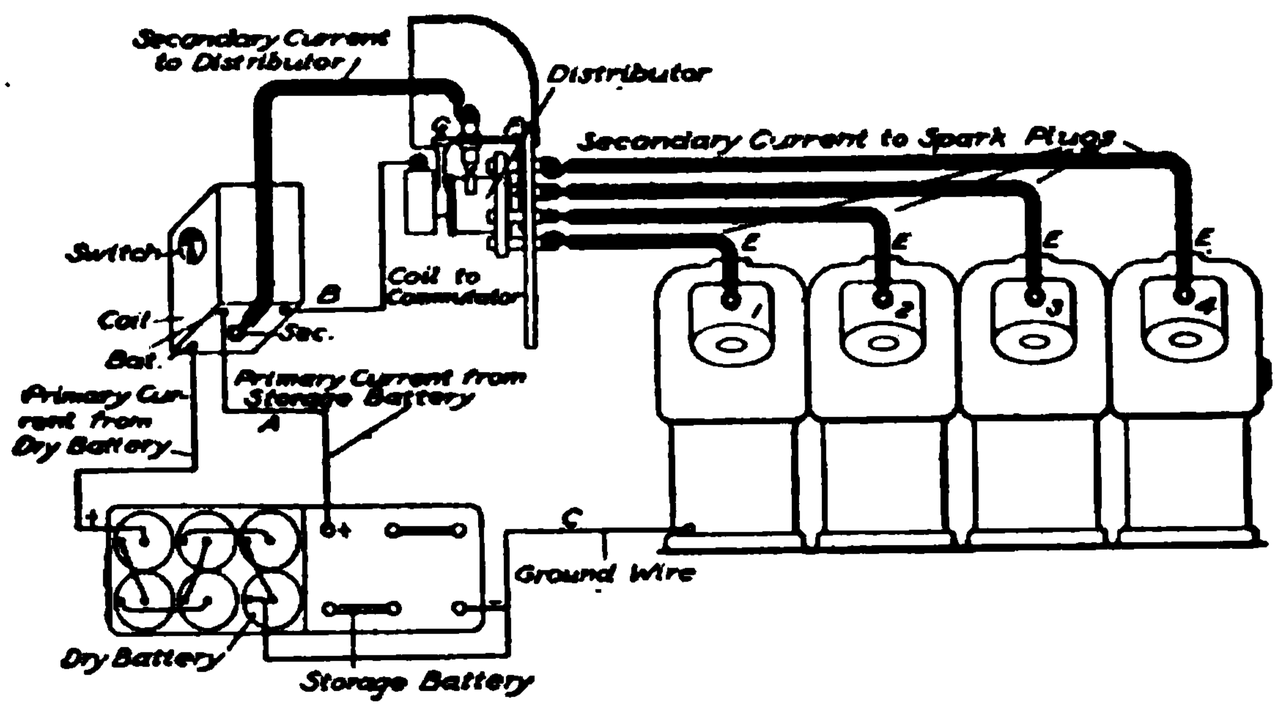

Fig. 77. Wiring Diagram for Four-Cylinder Engine Using Spark-Coil in Connection with Dry Cells and Storage Battery for Ignition.

As the speed of any shaft driven by the gasoline engine will be variable, such dynamos require governors to regulate their armature speed so that it will be kept constant no matter what the speed of the driving shaft is.

All dynamos have a certain speed at which they generate their normal voltage and current. This speed cannot be exceeded without danger of burning up the insulation of the machine by its own excessive current, or damaging its running parts. Moreover, an increased voltage is very damaging to the entire ignition system, particularly the storage-battery cells; hence it is very important that a small voltmeter be connected in the circuit at all times when a charging dynamo is on the car, and that this voltmeter be kept in sight so that any faulty action of the speed governor of the little dynamo may be at once detected.

This system also requires a means of automatically disconnecting the dynamo from the battery as soon as the engine stops, so as to prevent the battery current running back through the dynamo. The current for ignition is taken from the storage battery at all times. Fig. 78 shows the connections for this system.

Fig. 79 shows a shunt-wound dynamo with its speed governor.

MAGNETO SYSTEMS

The most troublesome features of the shunt-wound constant-current dynamo are speed regulation and constant attention to proper voltage. Hence there has been a tendency to dispense with charging the storage battery while running—which is the real advantage of the shunt-wound dynamo—and to use instead a *magneto*. The magneto cannot be used for charging batteries, owing to the irregularity of its uncommutated or very roughly commutated electromotive force. The magneto may be either alternating-current or direct-current. In the latter case, there is no attempt as a rule at more than one commutation, for the reason that it is desired to have the *peak* of the electromotive wave curve occur regularly in unison with the engine speed, that is, the impulses generated by the magneto must be made to coincide with the times at which the sparking must take place. This is accomplished by gearing the magneto to the engine cam-shaft.

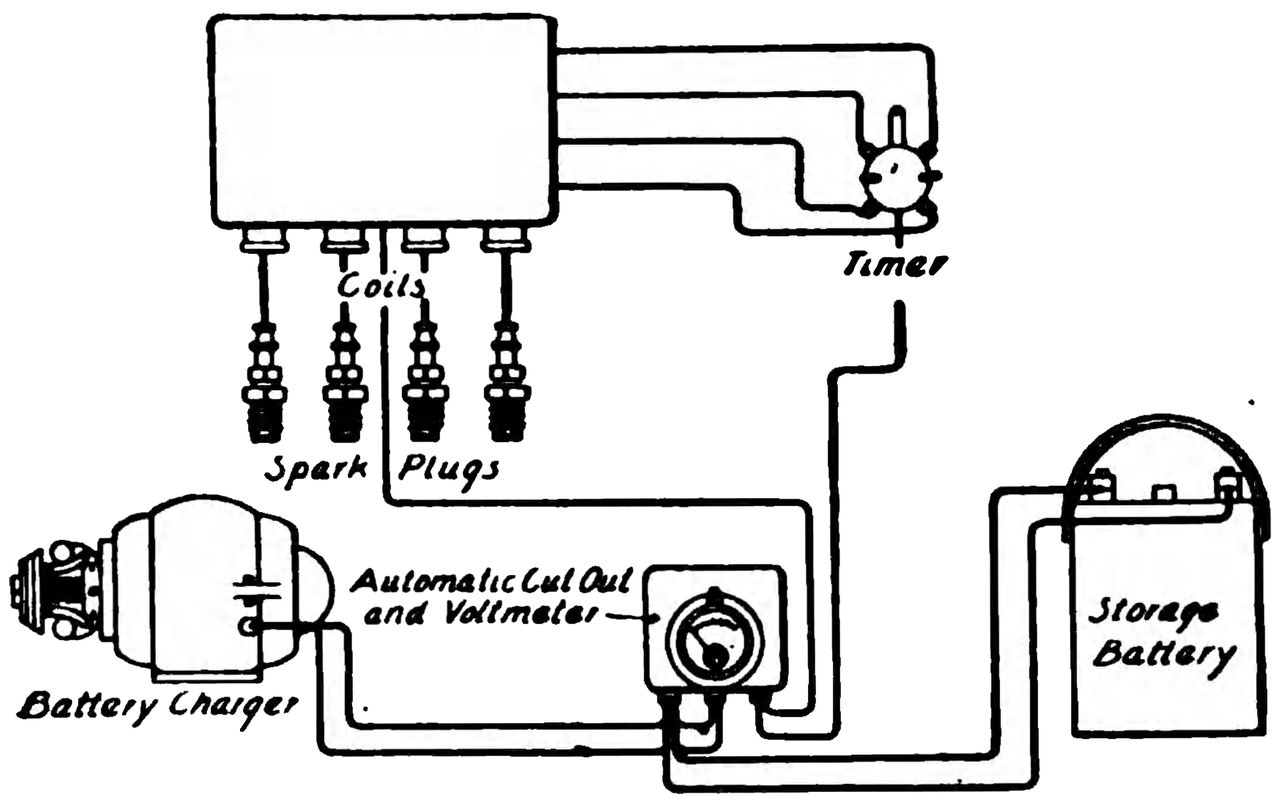

Fig. 78. Connections for Direct-Current Shunt-Wound Dynamo System of Ignition and Charging Storage Battery.

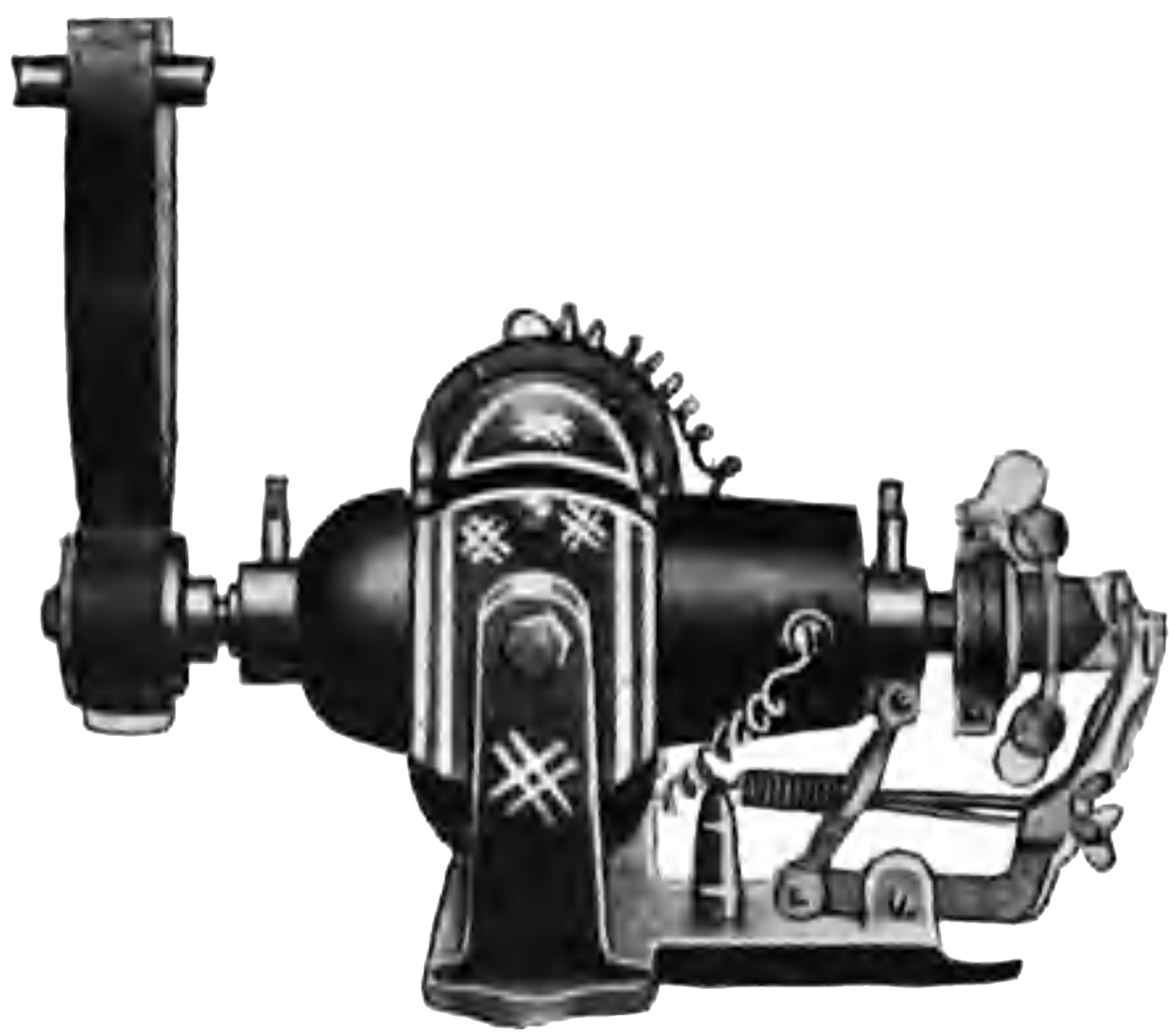

Fig. 79. Direct-Current Shunt-Wound Dynamo Driven by Gasoline Engine in Car and Used for Charging Storage Battery.

Purchase full membership to immediately unlock this page

DELVE INTO FANTASY, MAGIC, MYTHOLOGY & FOLKLORE

Forgotten Books' Full Membership gives access to 797,885 ancient and modern, fiction and non-fiction books.

Continue

*Fair usage policy applies

is led by a cable through the switch on the dash (when thrown to the right), to the primary winding of the magneto coil, and from there through the circuit-breaker on front of magneto to ground on the frame, thus completing the primary or low-tension circuit of the magneto. The high-tension current goes from the secondary winding in the coil into the distributor on the magneto, whence it is distributed to the four spark-plugs.

The second system, which is the one for emergency and for starting the engine, consists of a three-cell six-volt storage battery;

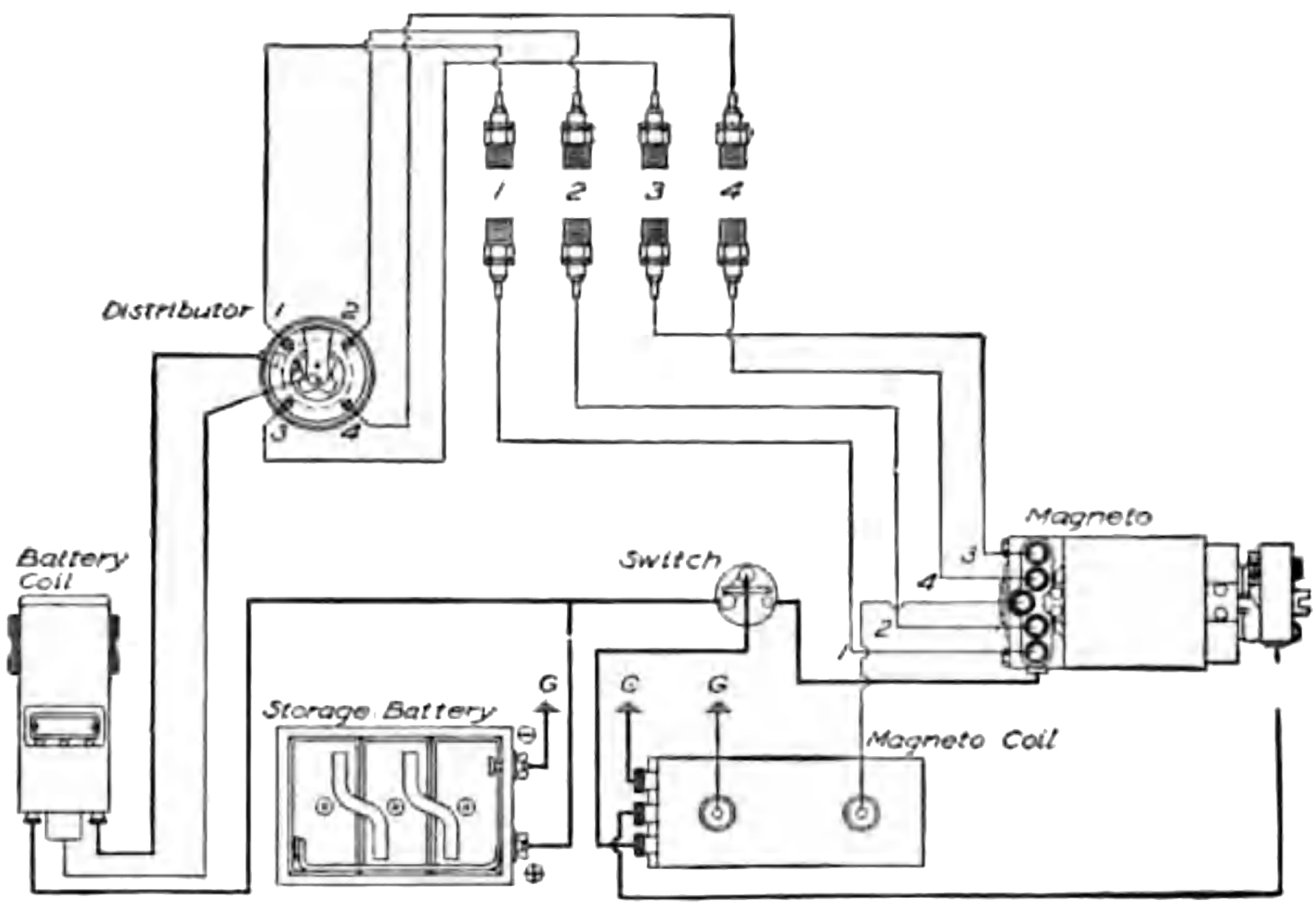

Fig. 81. Magneto, Spark-Coil, and Storage-Battery System of Ignition. National Motor Vehicle Company, Indianapolis, Ind.

a single vibrator coil; a distributor or commutator, located on the vertical shaft at rear of engine; and the set of spark-plugs. In this system the current goes from the positive terminal of the battery (the negative terminal being grounded to the frame), through the primary winding and vibrator of the coil on dash, and from there through the circuit-breaker located in the bottom of the distributor, and thence to ground on engine. The high-tension current comes from the secondary winding of the battery coil to the distributor, whence it is distributed to the four spark-plugs. Each system has its own set of spark-plugs. To operate this system, the plug must be placed in the left hole in the battery coil. The

same spark-lever controls the action of both systems. Ignition responds more instantaneously with the magneto system, so that it will appear to be timed ahead of the battery system.

The principal precaution to be observed in connection with the magneto, is to take care to prevent spattering of water on it when the car is being washed, to oil it carefully and regularly, and to see that none of its fastening screws become loose. Care should be taken to see that all wiring connections are tight, and that distributors are kept clean. Magneto brushes must not be flooded with oil, as they will become gummy and cause irregular firing.

Magneto of Locomobile Car. Armature Shown at Right, Withdrawn from Magneto. Bronze Cap at Left Encloses Contact End of Magneto.

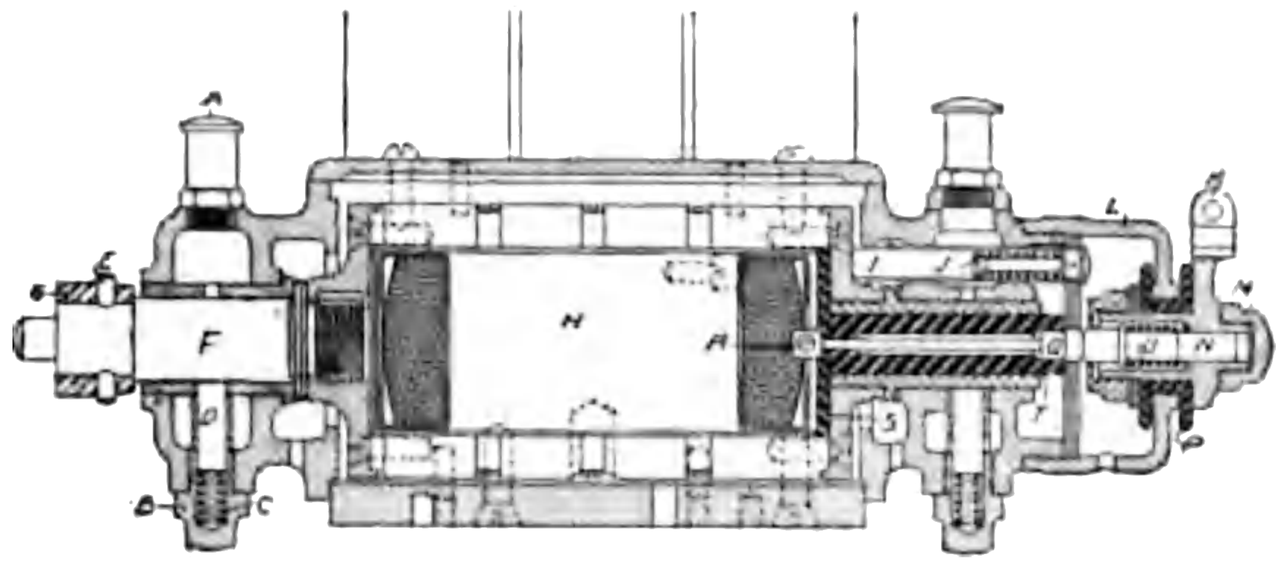

Sectional View of Magneto (Magnets Only Partly Shown).
Fig. 82. Magneto and Parts as Used in Locomobile Car. *A*—Oiler; *B*—Bearing Oiler; *C*—Bearing Oiler Spring; *D*—Bearing Oiler Wick; *E*—Taper Pin Holding Coupling on Armature Shaft; *F*—Armature Shaft; *G*—Driving-Shaft Coupling; *H*—Armature; *I*—Brush; *J*—Brush Spring; *K*—Magneto Terminal; *L*—Bearing Cap; *M*—Contact Plunger Socket Cap; *N*—Contact Plunger; *O*—Plunger Spring; *P*—Bearing Cap Insulating Bushing; *Q*—Armature Contact Stud; *R*—Armature Terminal; *S*—Armature Flange Insulation Plate; *T*—Armature Shaft Insulation Bushing.
Locomobile Company of America, Bridgeport, Conn.

Fig. 82 shows in detail a typical magneto and its parts, as used in the Locomobile.

SPARK-PLUGS

The *spark-plug* consists simply of a receptacle for the purpose of bringing closely together the two exposed parts in the secondary line of the spark-coil, across which exposed parts it is proposed to have the spark take place. Inasmuch as the voltage, as already explained, is very high, the chief qualification of the spark-plug is that it must

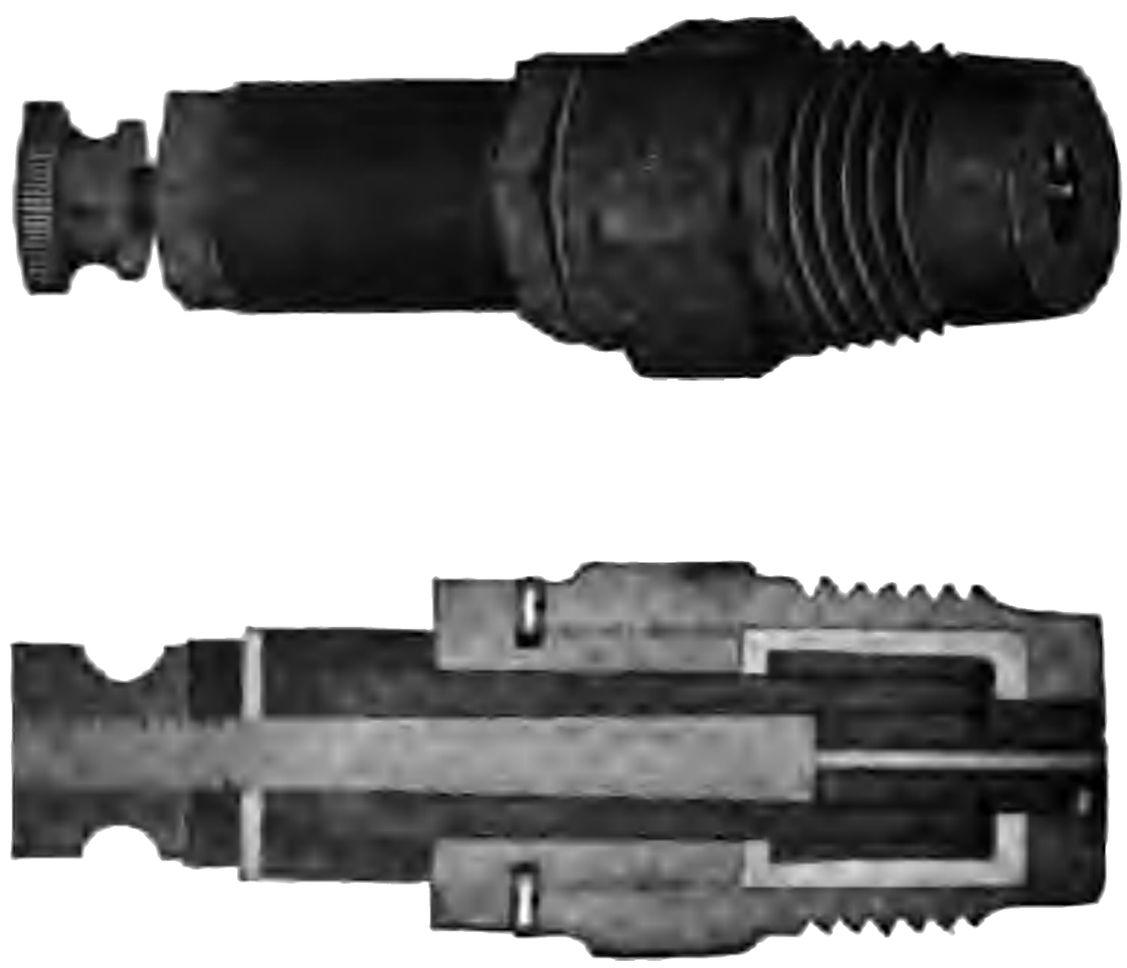

Fig. 83. Splitdorf Mica Spark-Plug.
The Splitdorf Laboratory, New York City.

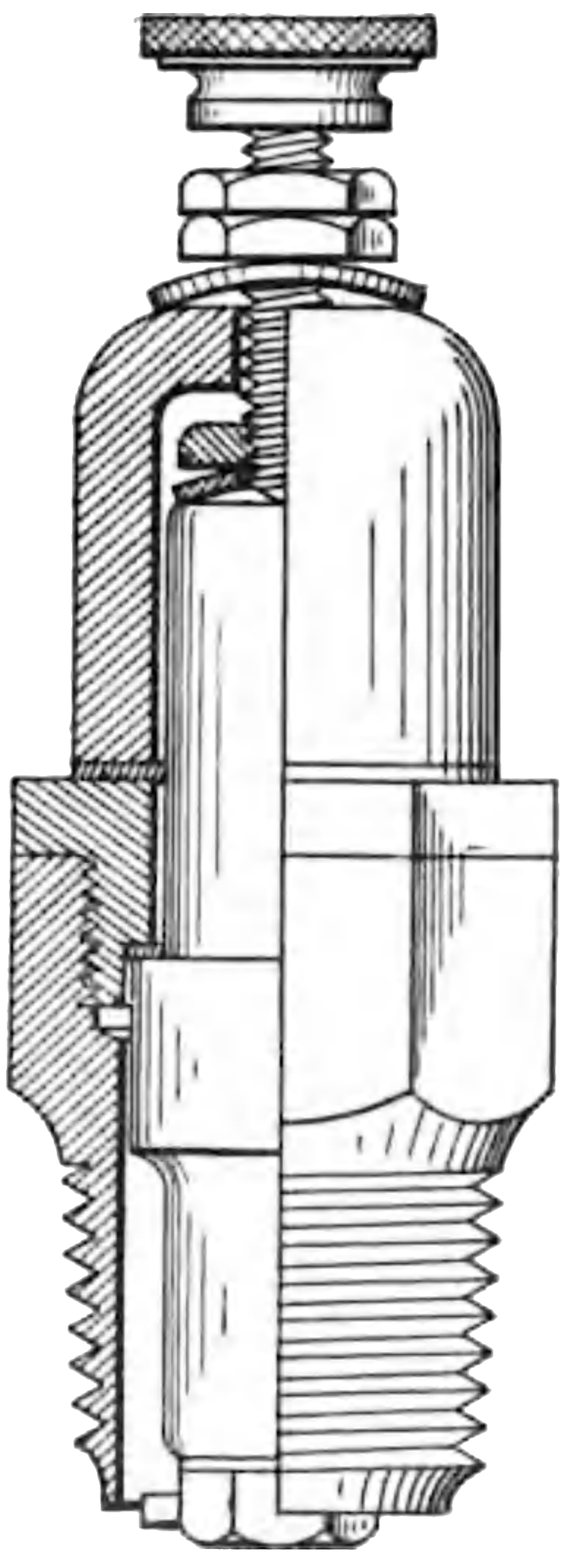

Fig. 84. Section of Sta-Rite Spark-Plug.
R. E. Hardy Company, New York, N. Y.

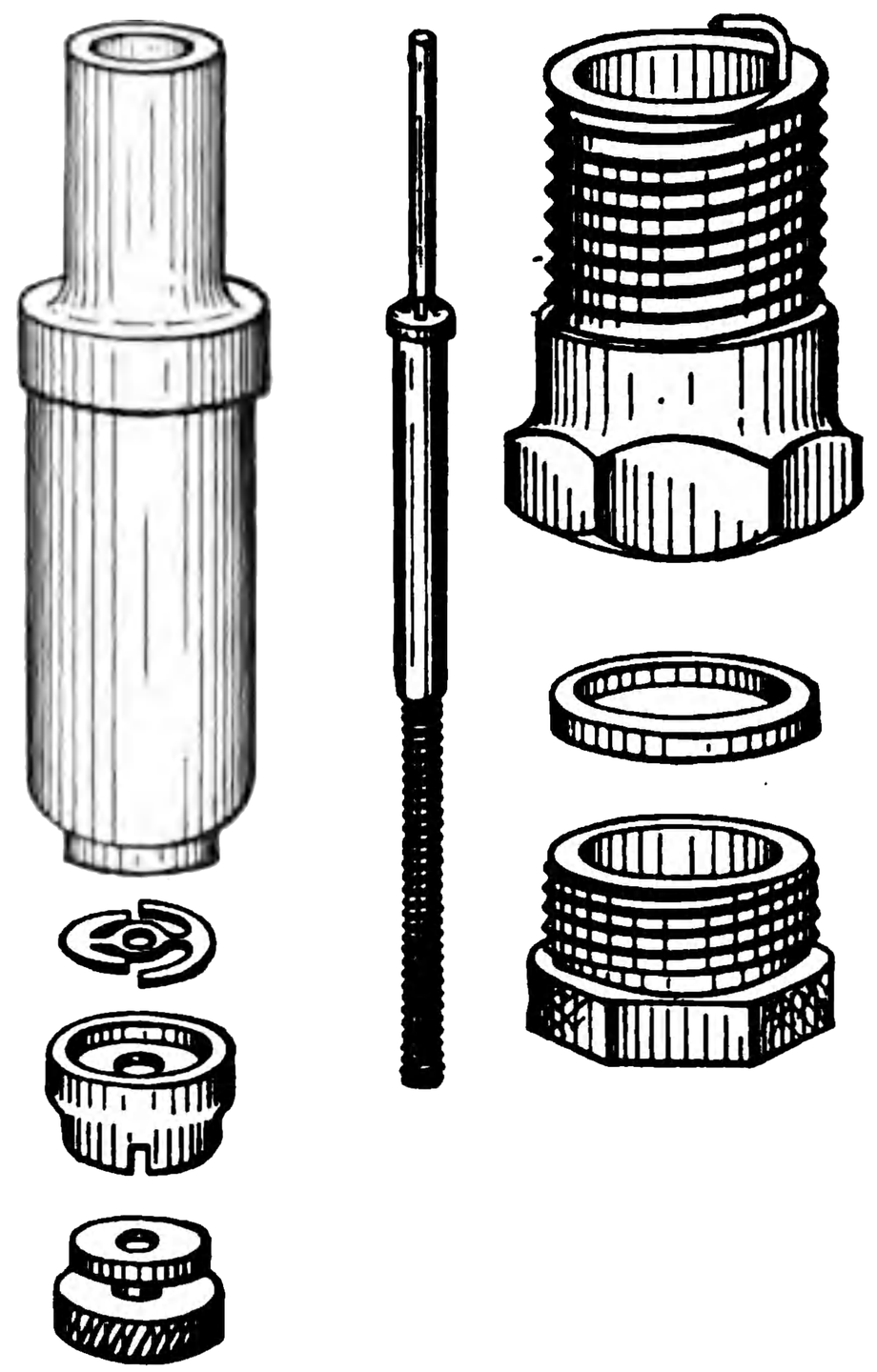

Fig. 85. Component Parts of a Soot-Proof Spark-Plug.
A. Mezgar, Brooklyn, N. Y.

Purchase full membership to immediately unlock this page

HISTORY

Tens of thousands of important historical sources, many previously unobtainable, are now available for the first time with a Forgotten Books Full Membership.

Unlimited Access
$8.99/month

Continue

*Fair usage policy applies

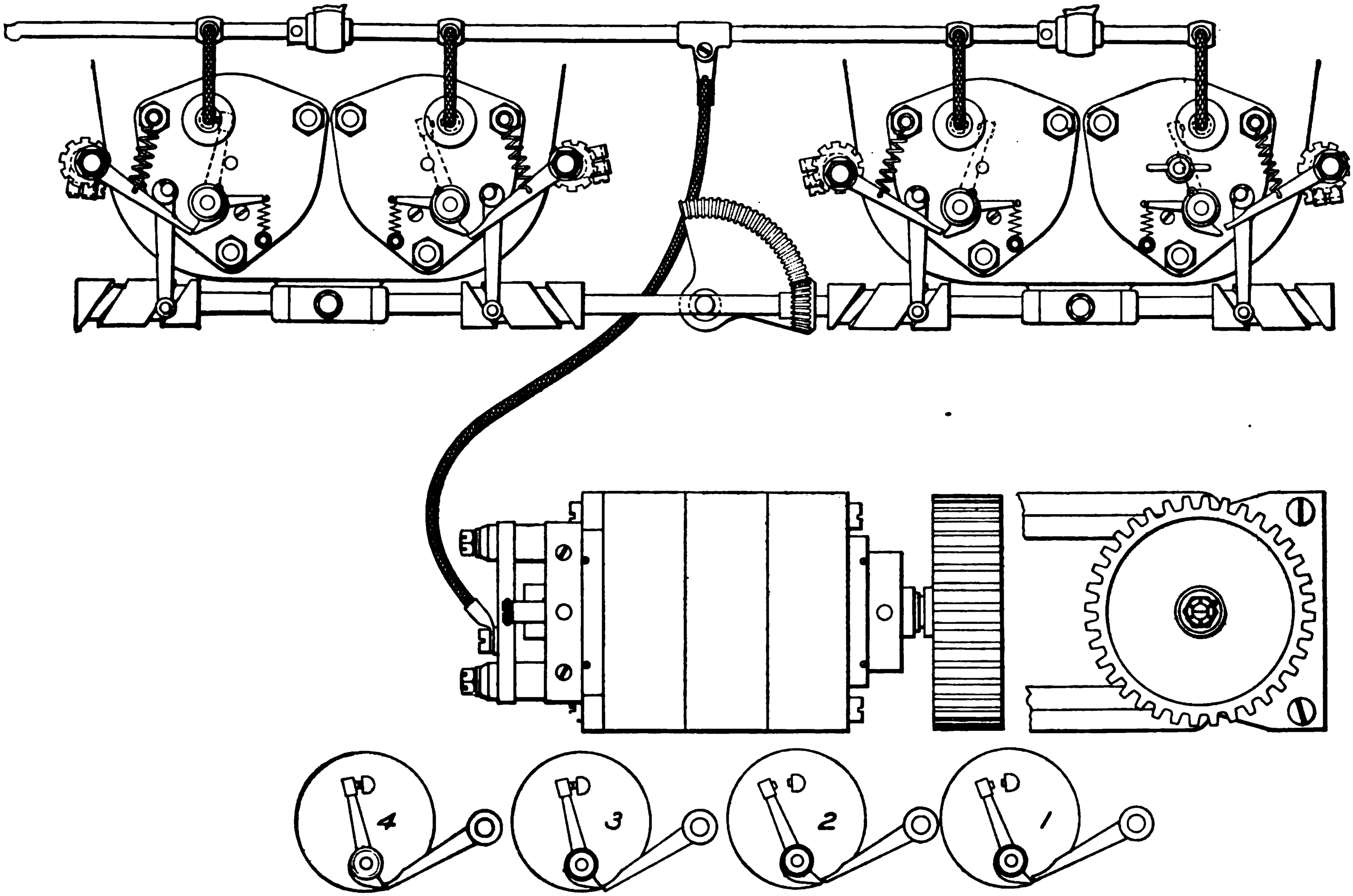

Fig. 87. Make-and-Break Ignition System as Used in Studebaker Four-Cylinder Car.
Upper diagram shows but one igniter in contact, which is correct. Lower diagram shows igniters 3 and 4 short-circuited.
Studebaker Brothers Manufacturing Company, South Bend, Ind.

or adjusted by turning the tension collar one or more holes and re-inserting the cotter-pin.

After a month or so of continuous running, the contact-points at the bottom of the igniter and on the inside of the cylinder may become blackened. In this case it is advisable to remove the entire igniter-block, and soak it for ten or fifteen minutes in kerosene, after which it should be washed thoroughly. When replacing the block in the cylinder, always see that the external parts are carefully lubricated. It is well to remove the contact-blocks about once a month, and wash them as above described.

STORAGE BATTERIES FOR IGNITION PURPOSES WITH GASOLINE ENGINES

The most satisfactory current for charging storage batteries for ignition in gasoline engines, is one which can be supplied at a low voltage, as by means of dynamos specially designed for this purpose, so that it can be regulated at about the total voltage of the batteries to be charged—that is, in the neighborhood of six to eight volts.

To charge the batteries, it is necessary to raise the voltage of the dynamo to a greater value than that of the battery. If the voltage of the charging dynamo is less than that of the battery, the ammeter will indicate that a current is flowing, but the pointer will be drawn towards the left or in a backward direction, showing that the current is in an opposite direction from what it should be, and the battery is discharging through the dynamo.

If it is not practicable to secure the power by driving a low-voltage dynamo for charging the storage battery, it will be necessary to place some kind of a variable electrical resistance in the charging circuit, so as to prevent a destructive current from flowing, due to the higher voltage. For this purpose, incandescent lamps may be used, placed in the circuit in accordance with the diagrams, Fig. 88. The necessary number and capacity of the lamps depend on the voltage supplied and the current required. The diagrams indicate 16-candle-power lamps; with 32-candle-power lamps, twice as much current would flow through the batteries.

Sketch *A* shows a voltage of 110, each lamp used allowing one half-ampere to flow. Two lamps would mean one ampere; six lamps, three amperes; etc.

Sketches *B* and *C* are for 220 volts. Sketch *B* shows two 20-volt lamps, each allowing one quarter-ampere to flow. Sketch *C* shows 110-volt lamps with a line voltage of 220. In this sketch the lamps are connected in pairs, each pair taking one half-ampere.

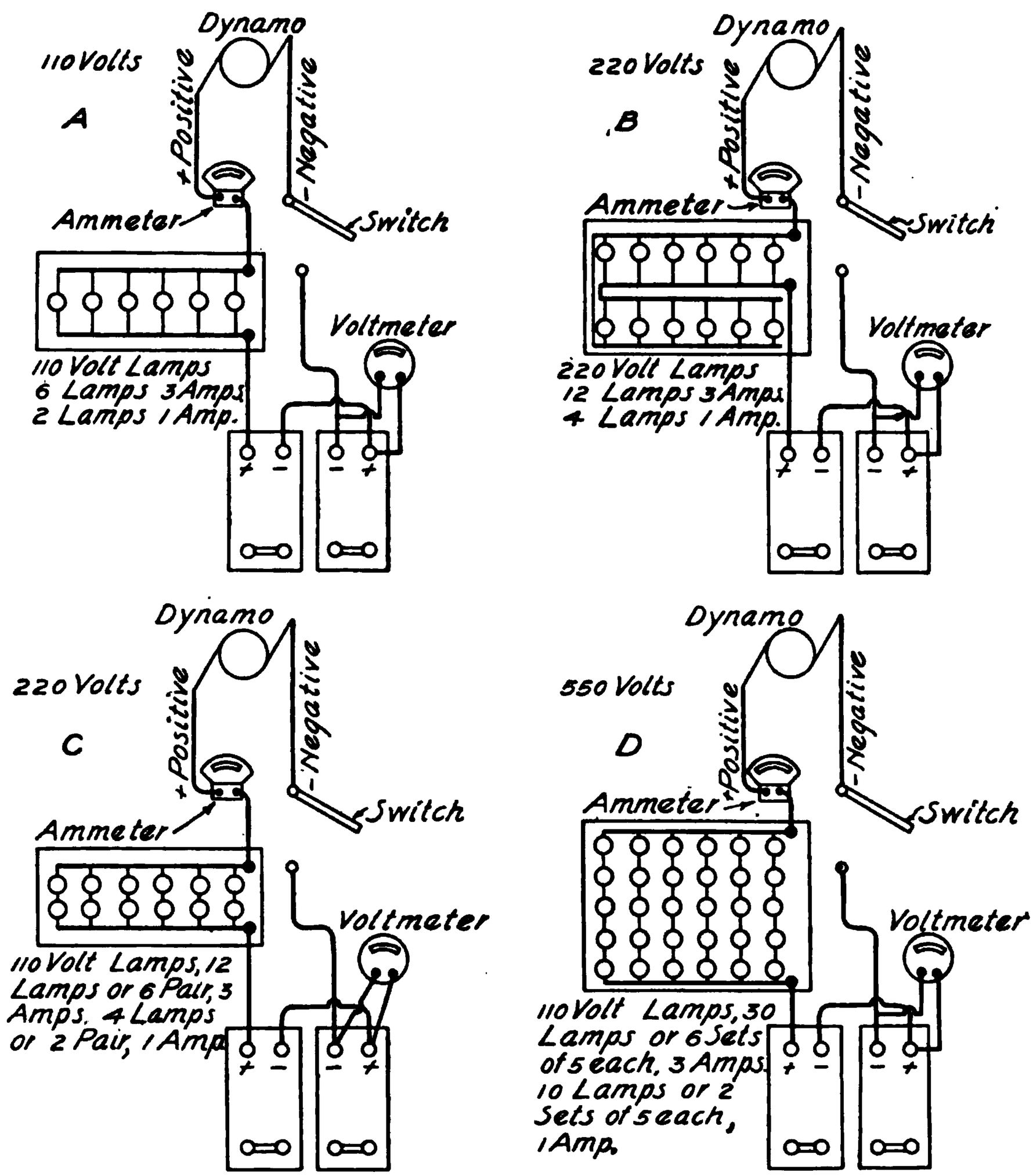

Fig. 88. Diagrams Showing Use of Incandescent Lamps as Variable Resistances in Charging Storage Batteries Used for Ignition Purposes with Gasoline Engines.

Sketch *D* shows connections for 550 volts. In this case five times as many lamps are needed as in *A*, connected in sets of five each, each set giving one half-ampere.

Only direct current can be used in charging storage batteries. *Be sure to connect the positive wire of the charging line with the positive terminal of the battery.* Otherwise, damage to the battery will result.

Purchase full membership to immediately unlock this page

DELVE INTO FANTASY, MAGIC, MYTHOLOGY & FOLKLORE

Forgotten Books' Full Membership gives access to 797,885 ancient and modern, fiction and non-fiction books.

Continue

*Fair usage policy applies

Another effect is weak power and consequently low speed. The compressed charge has had opportunity to expand as it fills the increasing space back of the advancing piston; hence, when it is ignited, the pressure force due to the explosion will not be so great as when the ignited mixture is still more highly compressed. Moreover, the spark occurring late in the stroke means that the effective forward pressure effort is exerted during a lesser portion of the entire stroke than would be the case with an early spark.

Advancing the spark-lever advances the spark; that is, the spark occurs earlier in the stroke, and the speed is accelerated.

In addition to hand-regulation, *automatic regulation* of the spark is accomplished in some cars. The method employed is usually an automatic centrifugal or inertia governor, being in all mechanical respects a miniature steam-engine fly-wheel type of governor, which is mounted on the commutator-shaft and connected to the commutator so as to cause a later or retarded ignition if the speed increases too high. While in one sense such a spark controller is a convenience, it is looked on by many operators as an unnecessary refinement, and merely an additional piece of mechanism to take care of.

Fig. 89. Hand-Wheel, Showing Usual Location of Spark- and Throttle-Levers.

Location of Spark-Lever. In some cars the spark-lever is on the right of the driver's seat. In other cars it is on the steering column.

Fig. 89 is a view of the top of the hand-wheel, showing the most usual location of spark- and throttle-levers. Fig. 90 shows the steering column in section, and illustrates how the various concentric tubes which turn independently of each other are turned by means of these levers and in turn draw the rods regulating spark and throttle control.

Throttle-Lever. The throttle-lever is equally important with the spark-lever in acting as a governor or controlling lever, in regulating the speed and power of the engine. The throttle-lever is named by some makers the *controlling lever* or the *governor lever.* In some makes of car the throttle-lever is located on top of the steering wheel; in other makes the throttle-lever is operated by a foot-

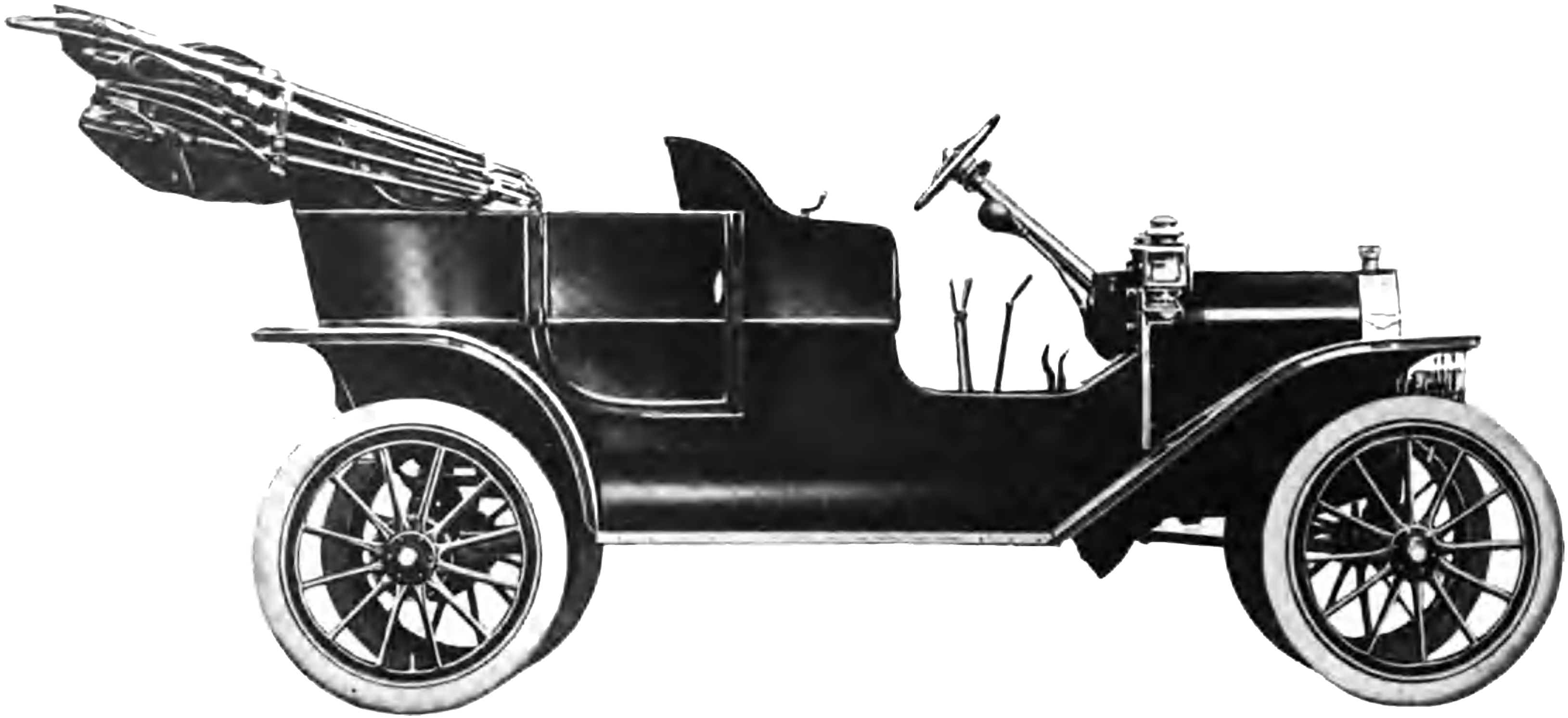

FOUR-CYLINDER TOURING CAR, MODEL T
Ford Motor Co., Detroit, Mich.

Purchase full membership to immediately unlock this page

HISTORY

Tens of thousands of important historical sources, many previously unobtainable, are now available for the first time with a Forgotten Books Full Membership.

Unlimited Access
$8.99/month

Continue

*Fair usage policy applies

The throttle-lever usually connects to a butterfly valve located in the pipe-line running from the carbureter to the engine, this small butterfly valve enlarging or diminishing the passage from carbureter to engine cylinders, thus decreasing or increasing the supply of gas.

In starting, the amount of charge needs to be but small; hence the

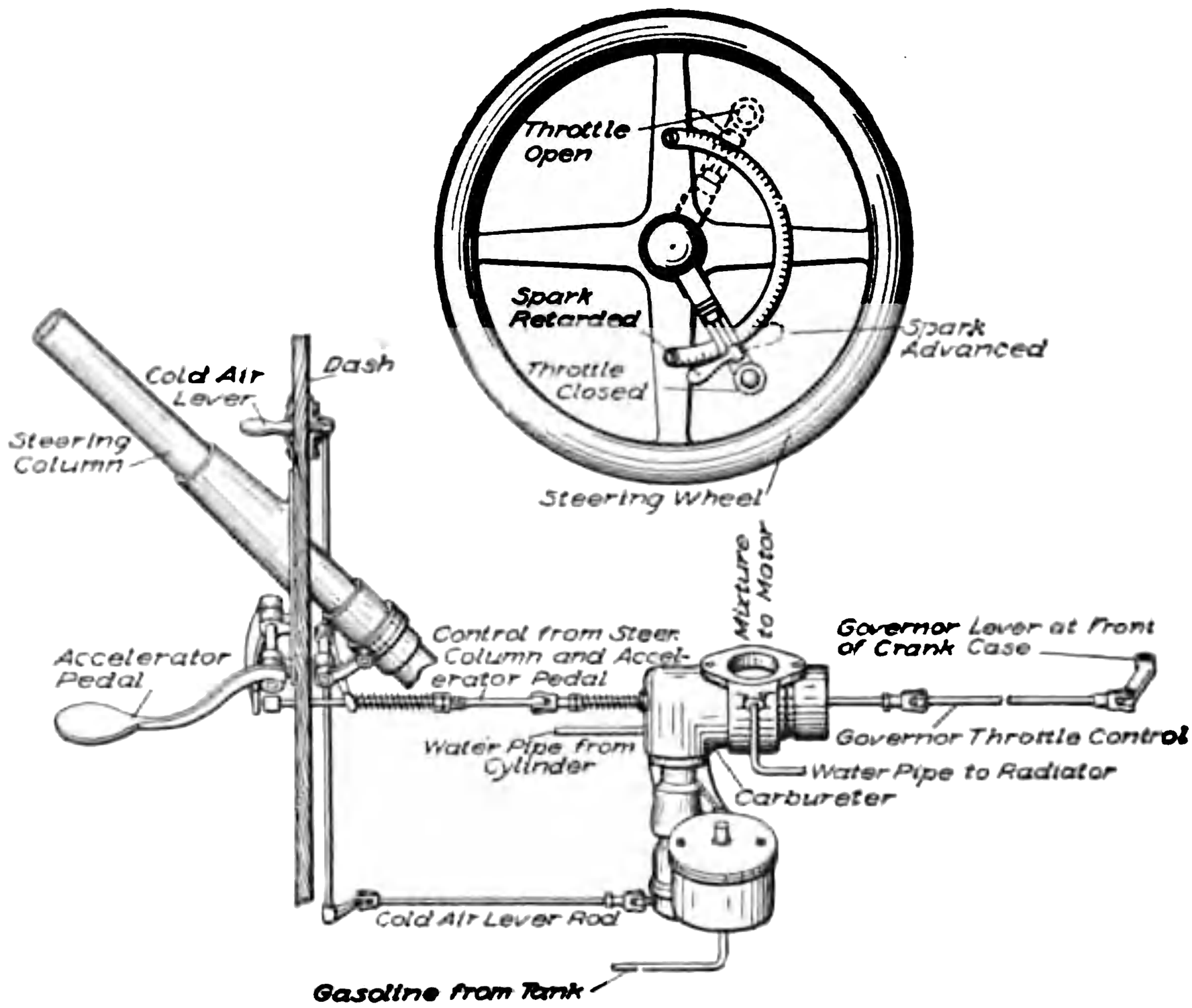

Fig. 91. Throttle-Control System of Peerless Car.
Peerless Motor Car Company, Cleveland, Ohio.

throttle-lever is in the position admitting only enough gas to turn the engine over.

When shifting gears, the throttle should be momentarily closed, and the clutch entirely disengaged.

Just before stopping the engine, push the throttle-lever to the position in which it most completely closes the throttle valve.

In speeding up a car, advance the throttle first, and then follow with the spark.

Do not get in the habit of running the car with the throttle open and spark retarded. This results in over-heating of cylinders and valves, often causing exhaust valves to stick from over-heating and carbonizing, and resulting in excessive gasoline consumption. Keep

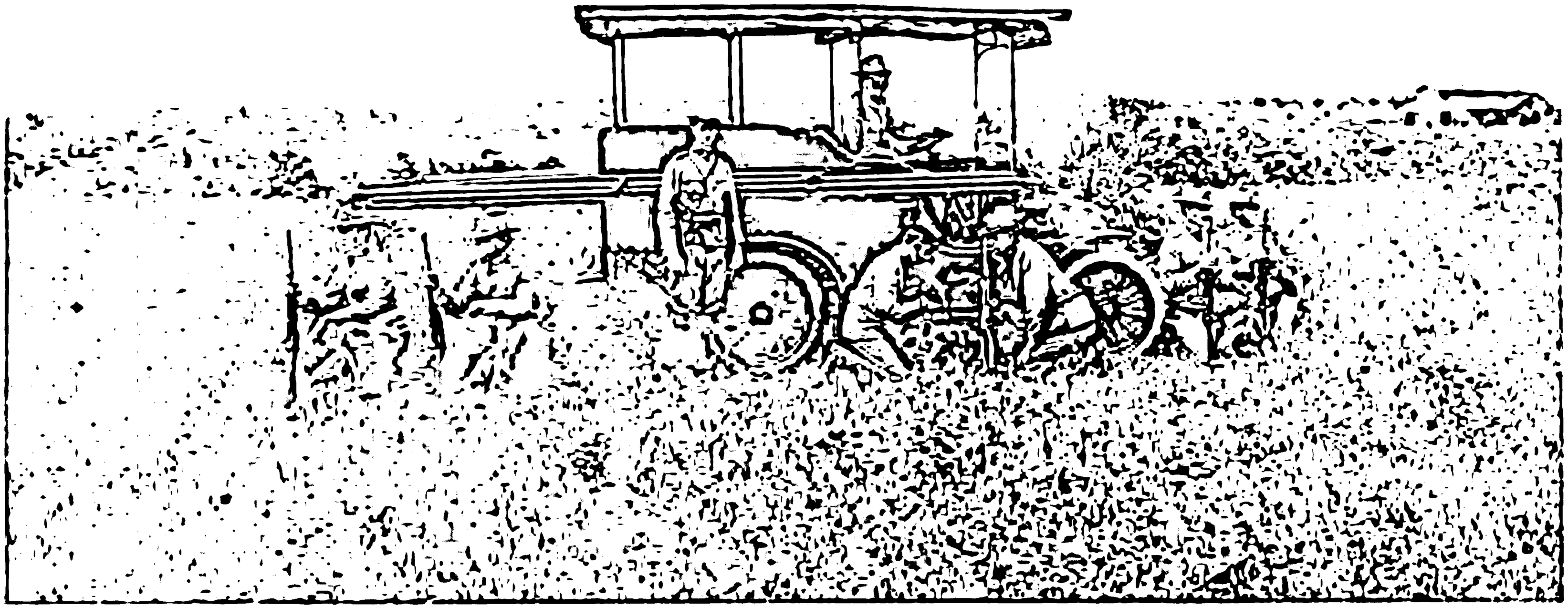

USE OF THE AUTOMOBILE IN WARFARE

Car used by U. S. Signal Corps in army manoeuvers of 1904 on battlefield of Bull Run.

Purchase full membership to immediately unlock this page

DELVE INTO FANTASY, MAGIC, MYTHOLOGY & FOLKLORE

Forgotten Books' Full Membership gives access to 797,885 ancient and modern, fiction and non-fiction books.

Continue

*Fair usage policy applies

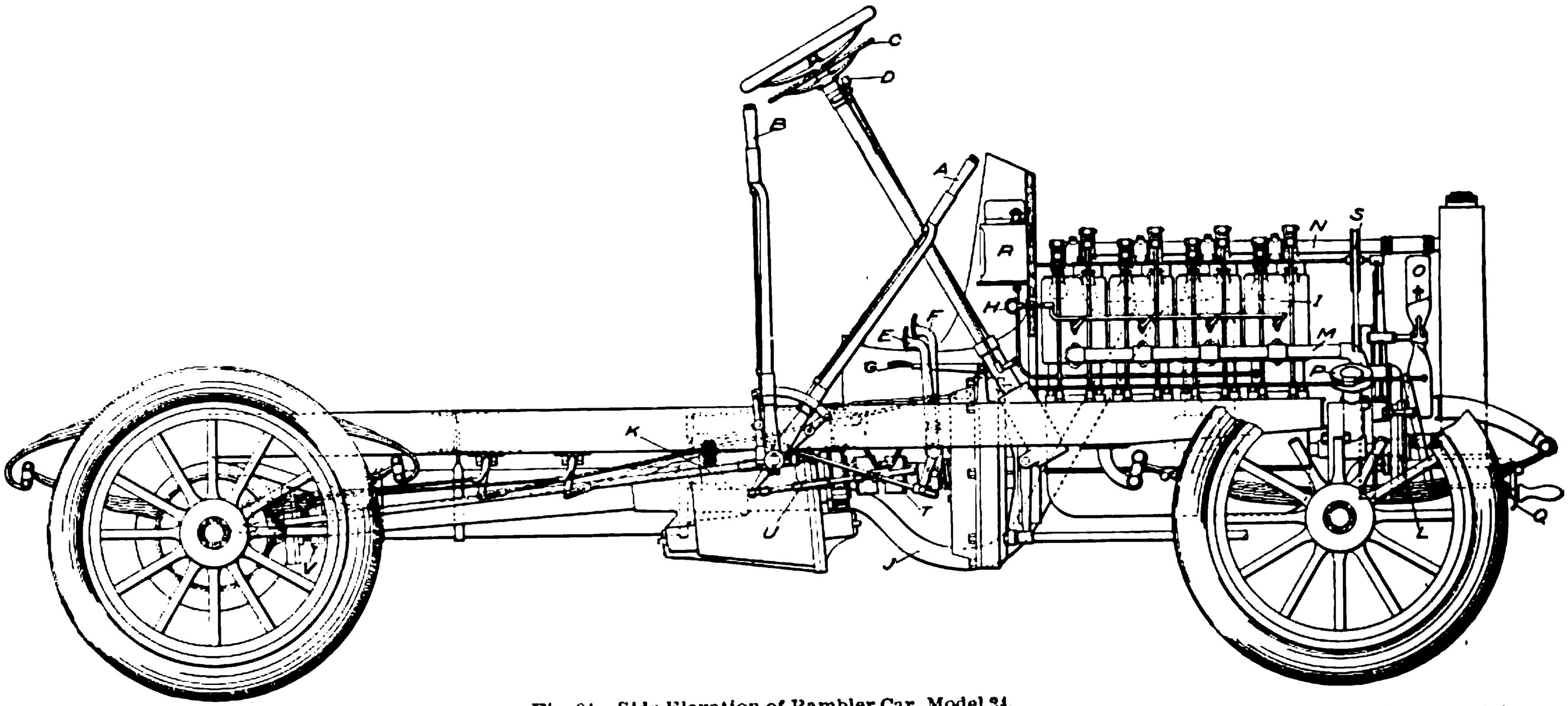

Fig. 94. Side Elevation of Rambler Car, Model 24.

A—Speed-Change Gear Lever; *B*—Emergency Brake Lever; *C*—Throttle Ring; *D*—Spark-Controlling Lever; *E*—Primary Brake Pedal; *F*—Clutch Release Pedal; *G*—Muffler Cut-Out Pedal; *H*—Pull-Rod for Opening Relief-Cocks; *I*—Inlet pipe; *J*—Exhaust Pipe; *K*—Muffler Cut-Out; *L*—Circulating Pump; *M*—Water Pipe from Pump to Cylinder Jackets; *N*—Water Pipe From Jackets to Radiator; *O*—Fan; *P*—Commutator; *Q*—Safety Crank Latch; *R*—Oiler; *S*—Pulley and Driving Rod for Operating Oiler; *T*—Universal Joint between Clutch and Transmission Gear; *U*—Gear-Shifting Connections; *V*—Bearing Adjustment at Rear End of Propeller Shaft.

for opening the exhaust into the air without passing through the muffler. This is a means of gaining more power, and is utilized in going up grades and when power is at low ebb.

The compression-relief rod connects to cocks on the engine cylinders, preventing or partially preventing compression. The chief use of this rod is in starting, to permit of easy cranking. The compression-relief rod, instead of operating independent relief-cocks, is frequently connected to cams or rollers which raise the exhaust valves.

Fig. 94 is a side elevation of Model 24 Rambler Car, which shows very clearly the location and action of the muffler cut-out and compression-relief levers. In this diagram, *G* is the muffler cut-out pedal, which connects to *K*, the muffler cut-out; and *H* is the pull-rod for opening the cylinder compression-relief cocks.

POWER-TRANSMISSION DEVICES

Thus far we have considered the frame, the running gear, the engine, and the methods used for operating and controlling the engine. The next logical step in our analysis of the car into its component parts, is a study of the methods of transmitting the engine power at its various speeds to the running gear. This leads us to a study of *Power-Transmission Systems.*

The power-transmission system consists (1) of the *Clutch* and its operating rods and levers for connecting the engine to the speed-changing or transmission system; (2) of the *Transmission* or *Change-Speed Gears,* which transmit the power of the engine to the *Differential System,* which last-named transmits the power from the change-speed gears to the rear axle of the car. The Clutch System and the Transmission or Change-Speed System each include a set of operating rods and levers, the action of each of which must be thoroughly understood by the operator before he attempts to drive his car.

CLUTCHES

Metallic Constriction-Band Clutches. Most runabouts having horizontal engines use what is known as the *constriction-band* type of clutch in connection with *planetary transmission.* The various speeds are given from the engine to a countershaft or an external hollow shaft carrying a sprocket wheel over which passes a chain

driving a larger sprocket on the rear axle. These various speeds are secured in the following manner:

A series of rods or clutch fingers are attached to a collar on a countershaft in such a manner that they may be operated to and fro by means of a lever located at the driver's right hand, which is known as the *clutch lever*. In this type of transmission, high speed is secured by locking all of the transmission gearing together so that it revolves with the motor shaft and acts as an additional fly-wheel carrying with it the driving sprocket. In the neutral position, the clutch fingers are altogether released, leaving the motor free to run without driving the automobile.

Fig. 95. Constriction-Band Clutch, as Used in Reo Car.
Reo Motor Car Company, Lansing, Mich.

The constriction bands are used to hold the large ring gears with internal teeth, which constitute the outer periphery, from turning while the internal smaller pinions roll around inside at a speed such that the sprocket is driven at about one-third or one-fourth that of the engine shaft. The mounting and meshing of the various gears are arranged so that the tightening of one constriction band causes slow speed forward, and of the other constriction band causes slow speed backward. In a good many vehicles of the runabout type, the reverse feature is separately connected to a foot-pedal.

Oil should not be put on metal band clutches unless there is evidence of cutting, as it will cause them to slip. The wearing surfaces of the bands should be wiped with gasoline occasionally, to help keep them smooth and clean.

It is seldom necessary to tighten the clutch bands, and it is usually a mistake to tighten them, as this is likely to cause them to break.

Fig. 95 shows an external view of a typical constriction-band clutch as used with planetary transmission in the Reo car.

Fig. 96 shows the planetary transmission of the Reo car, with

Purchase full membership to immediately unlock this page

HISTORY

Tens of thousands of important historical sources, many previously unobtainable, are now available for the first time with a Forgotten Books Full Membership.

Unlimited Access
$8.99/month

Continue

*Fair usage policy applies

Fig. 97. Internal Expanding Clutch. Peerless Motor Car Company, Cleveland, Ohio.

transmission or speed-changing system, which connects to the rear or driving wheels.

The clutch is most frequently operated by means of a *push-pedal.* In some cars it is necessary to keep a downward pressure on the pedal, either with the foot or by means of a latching device, in order to keep the clutch in contact with the fly-wheel. In this type of construction, a stiff spring normally pulls the clutch out of engagement, the pull of the spring being overcome by the pressure on the pedal.

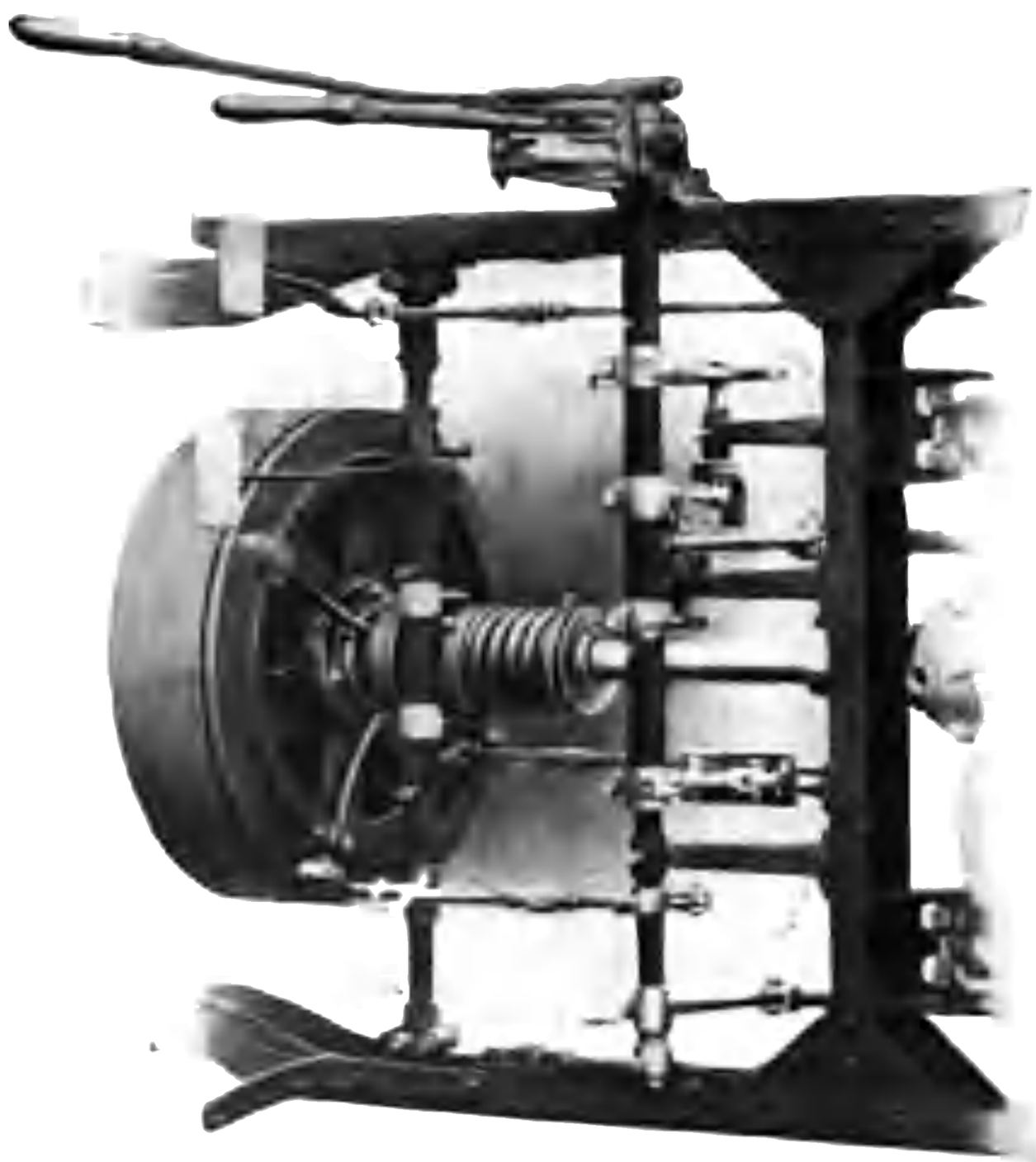

Fig. 98. Thomas Patented Three-Disc Clutch with Cork Inserts in Position on Chassis of Thomas Car. E. R. Thomas Motor Company, Buffalo, N. Y,

Another type of construction is one in which a forward pressure on the push-pedal disengages the clutch from the fly-wheel and prevents the transmission of power from the engine to the transmission.

It is a very general mistake to consider it as part of the regular oiling of an automobile to oil the leather face of the clutch. If the clutch is operating satisfactorily, it should not be disturbed. If it slips, it needs attention. Slipping of the clutch is caused by its

being too greasy and hardened by dirt. The remedy is to clean the leather with gasoline and then treat it with castor oil, spreading the oil all around, and allowing it to soak over night in order to make it soft and pliable.

In some cars the pliability of the clutch leather is increased by having grooves milled or chipped into the aluminum body of the disc,

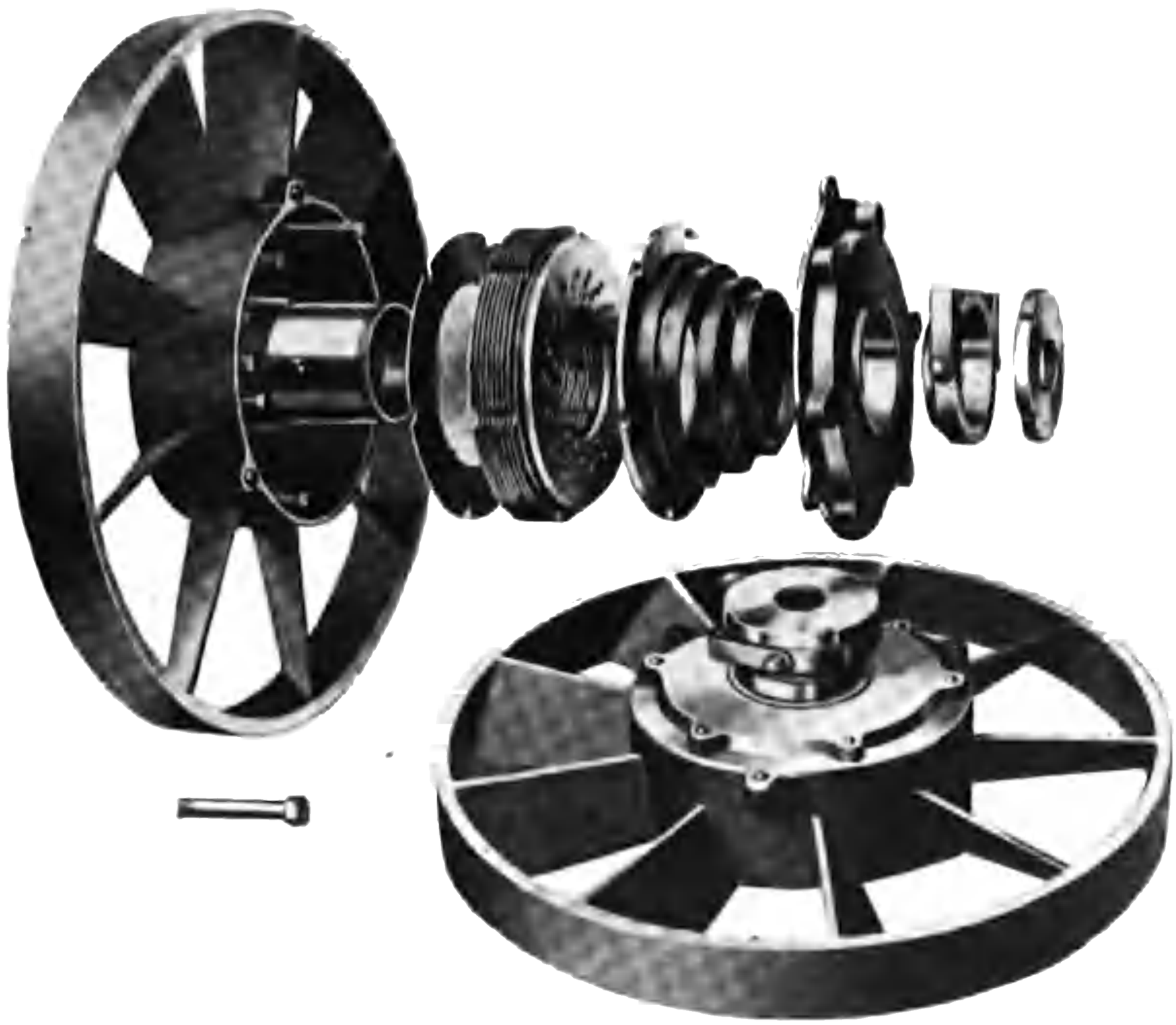

Fig. 99. Multiple-Disc Clutch of the Franklin Car.
H. H. Franklin Manufacturing Company, Syracuse, N. Y.

and placing short pieces of flat spring steel with a slight outward curvature in these slots. The outward pressure against the leather band, which, although riveted or stitched to the disc, is attached in such a manner as to be susceptible to this outward action of the spring steel, makes it very easy to engage the clutch gradually and without sudden gripping. A novice is inclined to throw the clutch in too suddenly.

Fig. 97 shows a conical leather-faced disc clutch as used in the Peerless car; and Fig. 98 shows a similar clutch as used in the Thomas car, mounted in position on the chassis.

Recently *multiple-disc clutches* have been superseding the leather-faced cone clutches, owing to the fact that the leather wears out pretty rapidly, and also the multiple discs can be put into small space and encased in oil. Fig. 99 shows this type of clutch as used in the Franklin car. The disc clutch is located within the fly-wheel. The discs are of phosphor-bronze and steel alternated, and run in an oil bath. The bronze discs revolve with the fly-wheel; the steel discs revolve with the clutch-driver. None of the discs can revolve independently, but they are free to slide together or apart; and when the clutch is let in, a spiral spring squeezes them together. As the oil between them is squeezed out, the bronze discs turned by the fly-wheel press against the steel discs on the clutch-driver, which is connected to the transmission shaft, and gradually revolve them by friction. This revolves the transmission shaft, and the car gradually starts.

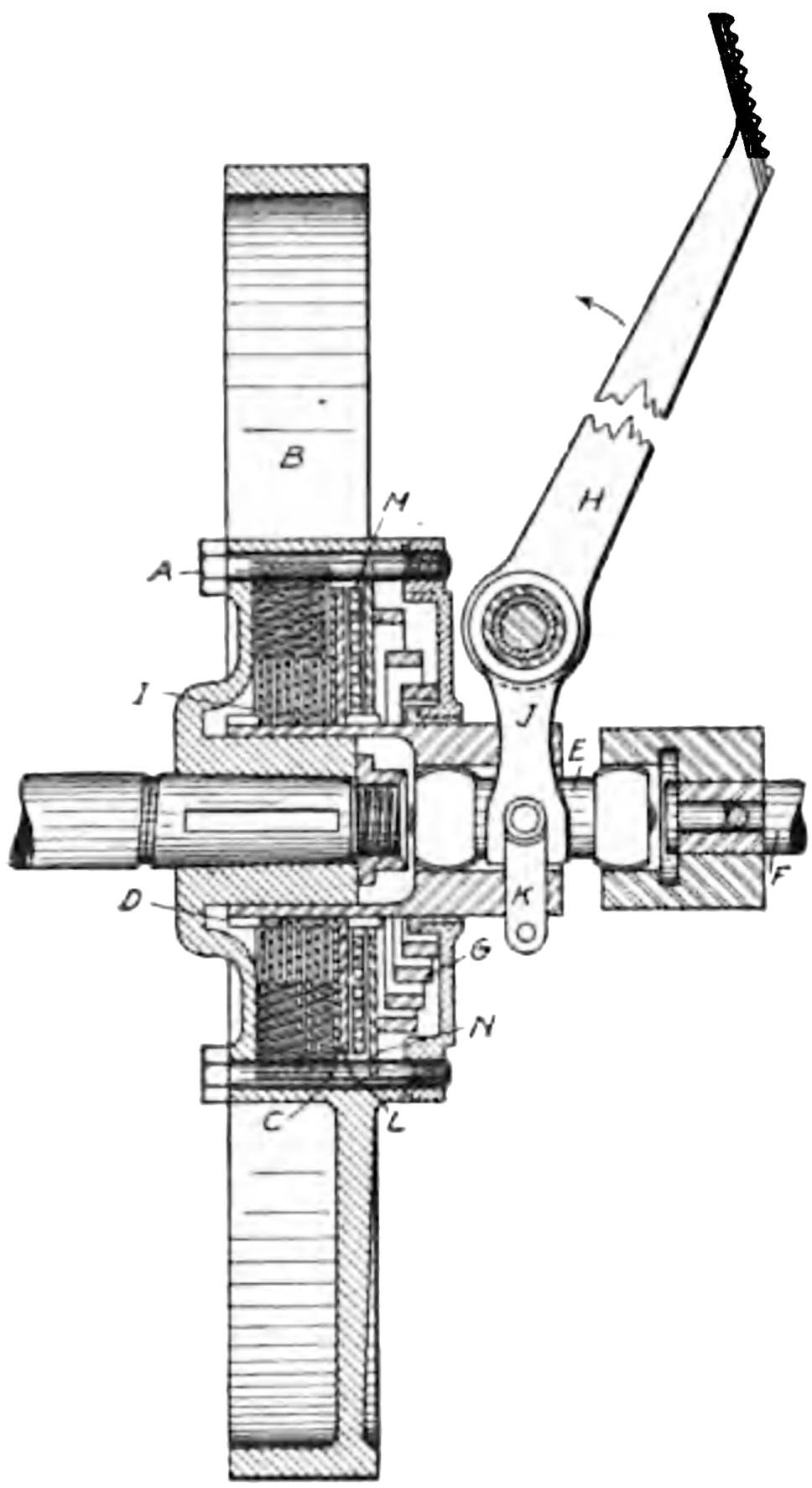

Fig. 100. Diagram Showing Construction of Franklin Multiple-Disc Clutch.
H. H. Franklin Mfg. Co., Syracuse, N. Y.

This clutch is further illustrated diagrammatically in Fig. 100. The bolts *A* prevent the phosphor-bronze discs from rotating in the fly-wheel *B*, but the discs are free to move laterally. The steel discs *C* do not touch the fly-wheel, but are carried on the clutch-driver *D*, on which they are free to move laterally, but can rotate only with the clutch-driver The clutch-driver, by means of the universal block *E*, is connected directly to the transmission shaft *F*.

The flat spiral spring *G* holds the plates firmly against each other when the clutch is engaged or whenever the foot-lever *H* is not pressed forward.

Purchase full membership to immediately unlock this page

DELVE INTO FANTASY, MAGIC, MYTHOLOGY & FOLKLORE

Forgotten Books' Full Membership gives access to 797,885 ancient and modern, fiction and non-fiction books.

Continue

*Fair usage policy applies

tary pinions, rolling on the internal gear *B*, drive the same slowly forward, and with it the sprocket *A*.

For reverse, the case *H* is held by its constriction band; and gear *B* is now driven in the opposite direction from the engine shaft, and with it the sprocket *A*.

Fig. 101. Planetary Transmission Gear of Cadillac Single-Cylinder Car.
Cadillac Motor Car Company, Detroit, Mich.

Sliding Gears. The sliding-gear type of speed-changing device is by far the most generally used, particularly on touring cars and heavier cars in general.

The sliding-gear set consists of two sets of gears—one set mounted on a shaft to which they are rigidly fastened; and the other set mounted on a countershaft, which is either square between its journals, or with a long key so that the gears on it may be moved lengthwise along the countershaft and made to mesh in different combinations with the gears that are fixed in position on the main shaft.

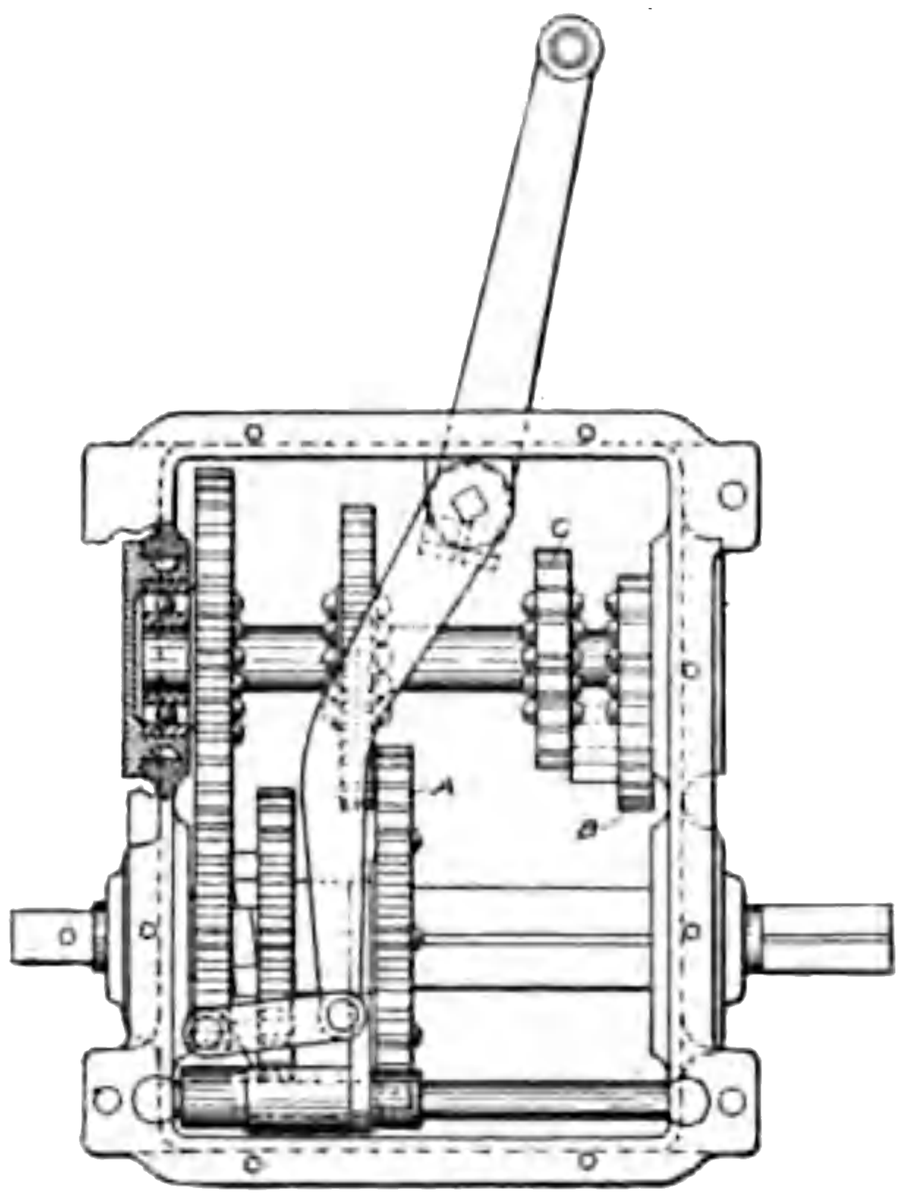

Fig. 102. Sliding Transmission Gear of Franklin Car.
H. H. Franklin Mfg. Co., Syracuse, N. Y.

The operation of the sliding-gear set on any car can be easily learned by removing the gear-box cover and moving the gear-shifting levers, watching the resulting gear meshings.

Fig. 102 shows the sliding-gear set of the Franklin car. The cut shows the position of the gears for direct drive, or high-speed gear. For reversing, gears *A* and *B* are in mesh. For low speed, gears *A* and *C* are in mesh.

Fig. 103 is another example of a sliding-gear set as used in the Autocar. The shaft *A* is the main drive shaft, on which the clutch is mounted. Gears *B* and *C* are practically one piece, and are car-

ried along the squared shaft *D* by a sliding fork connected by rods to the gear-shifting lever (this fork is not shown in the illustration). Shaft *A* is separate from shaft *D*; that is, they can revolve at different speeds. For the slowest speed, the slide gear *BC* is moved along the squared shaft until *C* is in mesh with *E*. For the reverse, *C* meshes

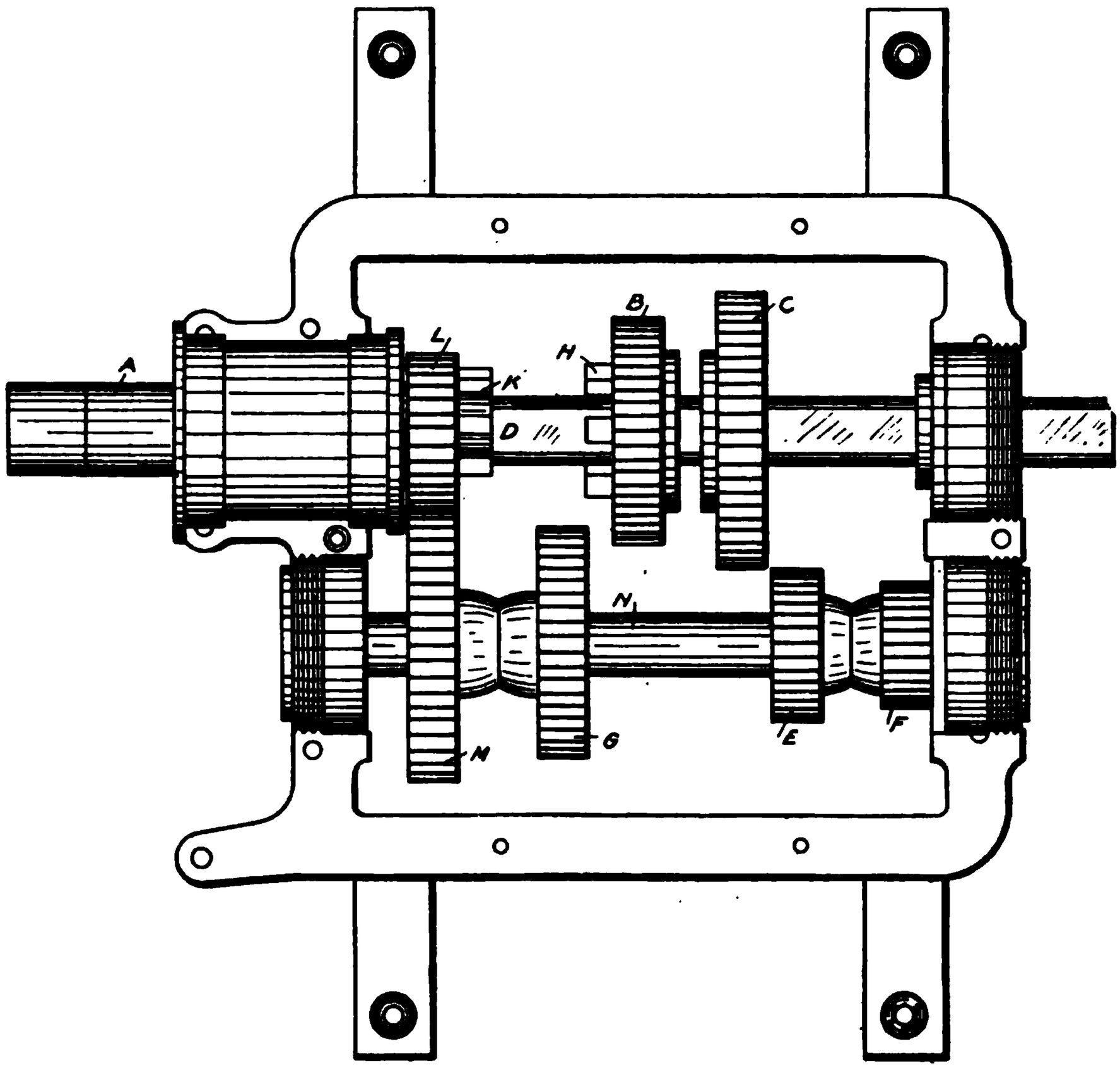

Fig. 103. Sliding-Gear Set of Autocar.
Autocar Company, Ardmore, Pa.

with an idler connected with *F*. For the intermediate speed, *B* meshes with *G*. For high speed or direct drive, the teeth *H* engage with the teeth *K*, and *D* rotates at the same speed as the engine shaft. At all times *L* is in mesh with *M*, and so drives the countershaft *N*. At the rear end of *D*, is the universal joint connecting the gear set with the rear axle.

All modern cars that use sliding-gear sets are provided with some arrangement whereby the clutch is disengaged during the gear-shifting process, in order to prevent grinding of gears during changes.

Speed-Changing Levers Operating Sliding Gears. Some cars have separate levers for high and low speed. Some use a lever for high speed, and a foot-pedal for slow speed; and in such cars the operator must be careful never to throw the high-speed lever forward before the low-speed lever is released, or *vice versâ*.

Some makers use a single speed-changing lever on the right side of the car, usually nearer the operator than the brake lever, which is

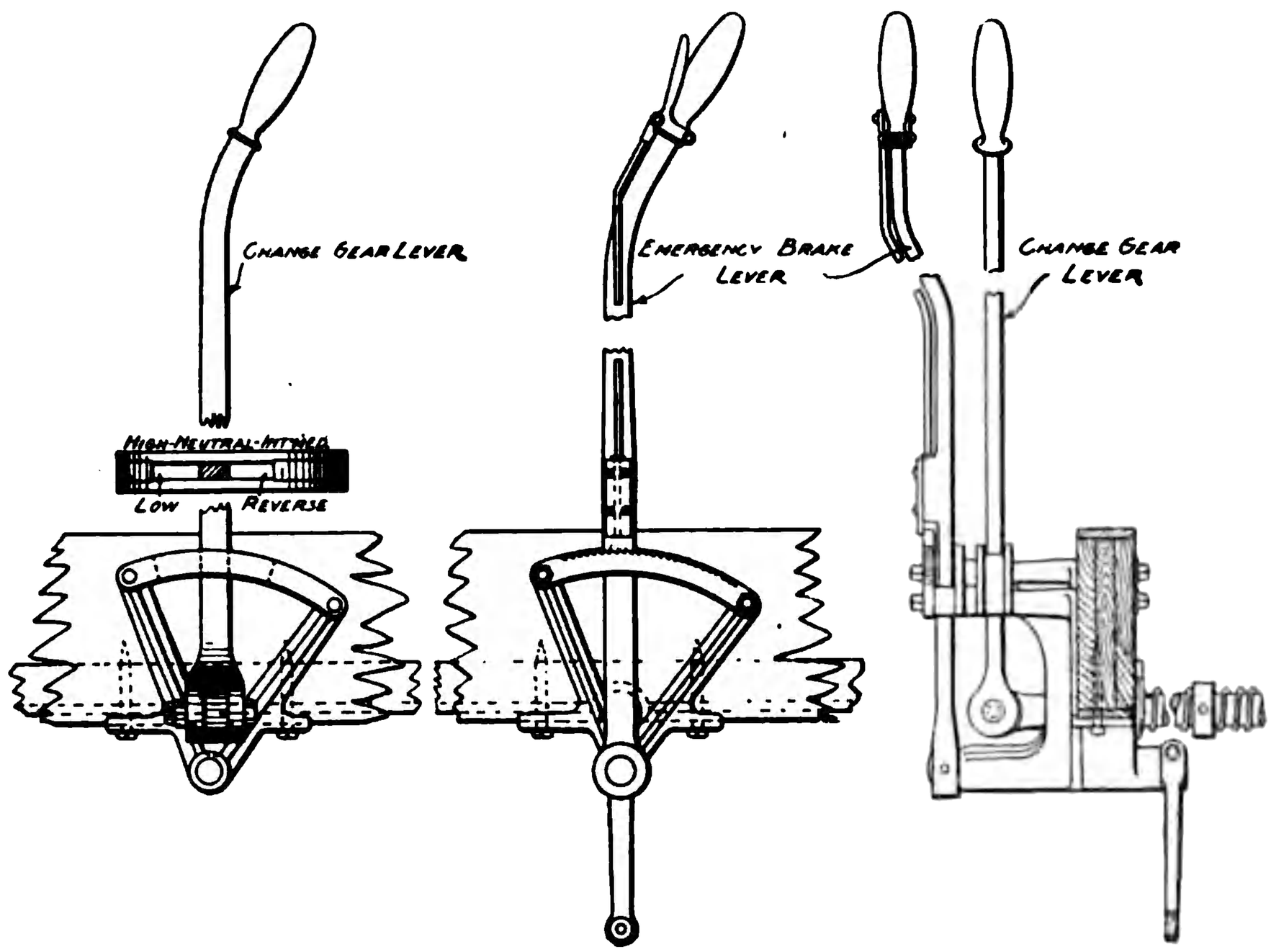

Fig. 104. Emergency Brake and Change-Gear Control.
H. H. Franklin Manufacturing Company, Syracuse, N. Y.

generally the outside lever where there are two levers on the right side of the car. With this variety of speed-changing lever, there is usually a piece in the form of a quadrant or arc of a circle located near the lower part of the lever. This quadrant is provided with notches that catch a pawl with a spring back of it, which is compressed and consequently released by the hand pressing on a grip operating a rod leading to the spring. These notches or steps are located at the points for proper meshing of gears, or of tightening of clutch-bands for the various speeds.

A still further range in a limited space is obtained in the Thomas, Franklin, Peerless, and other cars, by means of a lateral movement of the speed-changing lever so that it has two paths in

Purchase full membership to immediately unlock this page

HISTORY

Tens of thousands of important historical sources, many previously unobtainable, are now available for the first time with a Forgotten Books Full Membership.

Unlimited Access
$8.99/month

Continue

*Fair usage policy applies

106, which shows the sliding gears of the Peerless car). Second speed is through direct-drive sleeve, countershaft gear, second-speed pinion, and second-speed gear. Third speed is through direct-drive sleeve, countershaft gear, third-speed pinion, and third-speed gear. High speed is through direct-drive gear meshing internally with third-speed gear, thus making a direct drive.

For the reverse, the driving is through the countershaft pinion, countershaft gear, first-speed pinion, and reverse idler gear that reverses first-speed gear.

The most desirable arrangement for direction of lever movement for reverse, is one in which the lever must be pushed backward from neutral notch towards the rear of the car, as this seems the natural movement to produce *backing up*.

Use of Speed-Changing Levers in Operating Car. Before pushing lever into high gear, start on low gear, then throw into middle gear, and then into high speed.

To stop the car, disengage the clutch where the clutch is operated by a foot-pedal separate from the hand-levers. This plan is advocated because it facilitates quick stopping. Remember, however, that you have not "finished your job" until the speed lever has been thrown into "neutral" or "off" position. You are likely to forget this, although remembering the other details in regard to stopping your engine, with the result that when you throw in the clutch you start off on high speed.

In cars where a foot-pedal throws in the clutch, be sure that the speed-selecting lever is fully in position for proper meshing before the clutch pedal is let into connection; otherwise the gear teeth may be only partly in mesh, and the sudden strains of starting would be liable to damage the gears.

CAUTION. *Engage but one gear at a time.* A serious chance for confusion and breakage is offered the operator in makes of cars employing separate levers, by the fact that in some cars the slow-speed lever is used as a reverse lever by pushing it into its extreme forward position, instead of by adopting the suggestive and natural method of accomplishing reverse by a backward throw of the lever.

In all cars employing two levers for speed changes, be absolutely sure that one lever is thrown into neutral position before the

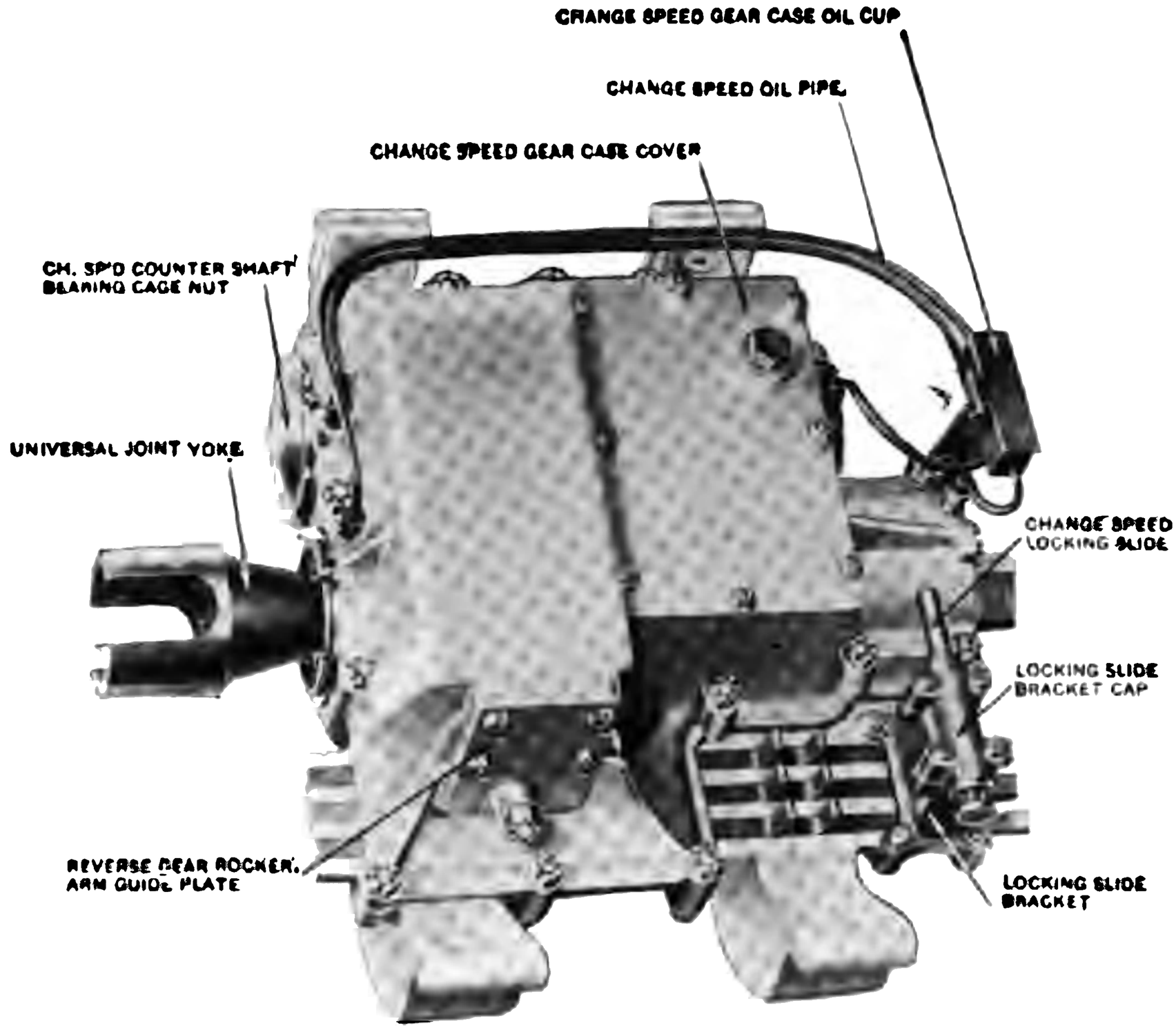

Speed-Changing Gear Set, in Case.

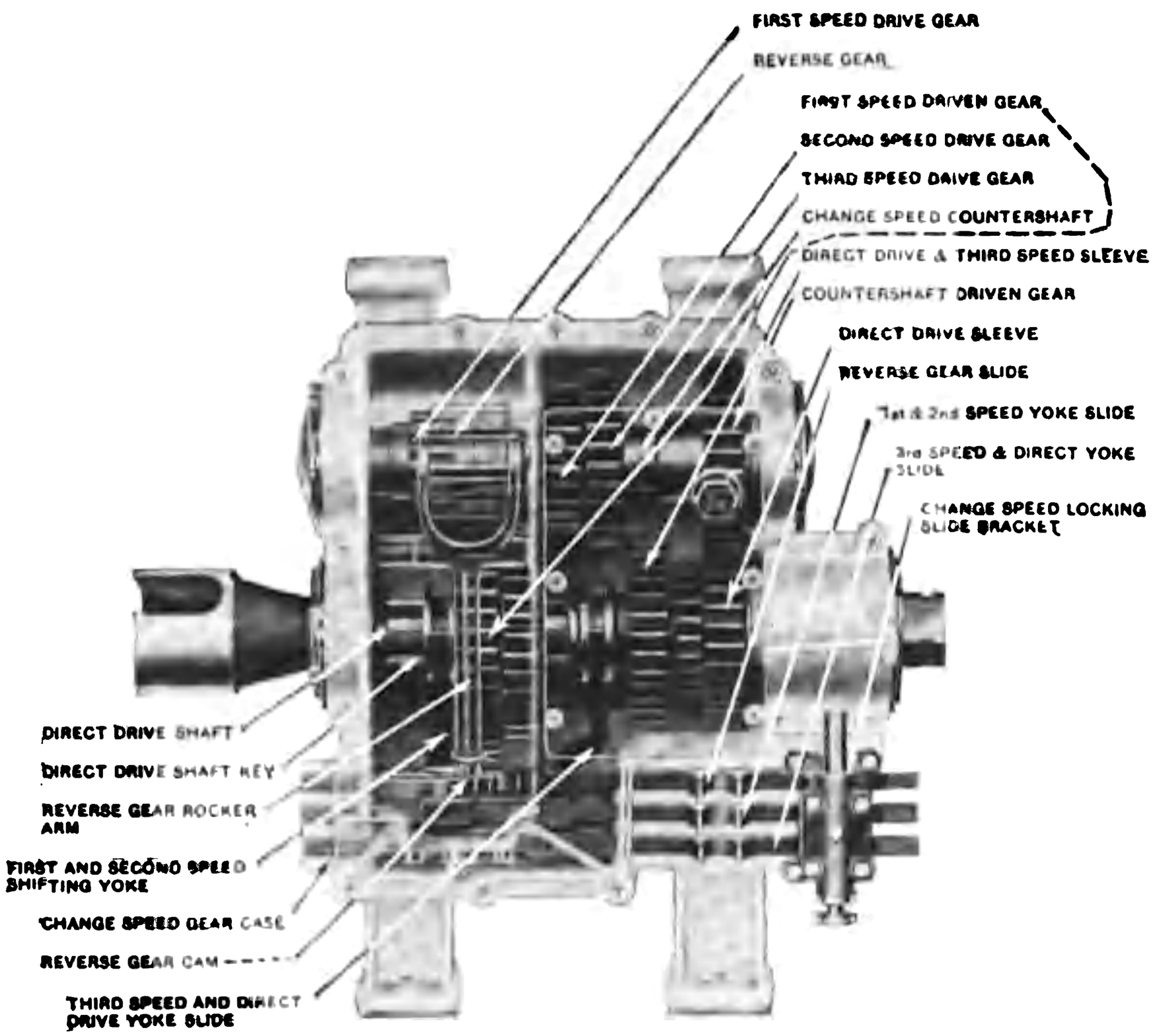

Fig. 106. Speed-Changing Gear Set, Cover Removed.
Speed-Changing Gear of Peerless Car.
Peerless Motor Car Company, Cleveland, Ohio.

other is engaged. The neutral position would naturally be the center of the arc or quadrant; but here again different makers differ.

Although some cars are so constructed that the meshing of one lever *locks*, or prevents any other lever from being thrown into mesh, there are many makes of car which are not "fool-proof" in this respect. A novice, thinking he has to put on his slow speed before reversing, and then put on his reverse, is liable to damage something in some makes of cars where he can put both in mesh at the same time.

Changing Gears. A driver will soon become familiar with the approximate speed corresponding to each set of gears, especially if he compares the speed as he sees and feels it with the odometer readings. In changing gears, the car should first be brought by means of the spark and throttle regulation to very nearly the speed of the gear to which it is desired to change.

In changing from low to high, the movement on the gear lever should be quick, so that meshing of the teeth is done promptly without any grating. In changing from high to low, the movement does not need to be so rapid.

Difficulty in Changing Gears. If there is difficulty or noise in changing gears, it is likely to be due to worn or loose bearings, or loose pinions, or loosening of the gear case. A new car should not be accepted if there is difficulty or noise in changing gears, although this feature is neglected by many makers.

Grinding Gears. Occasionally a car is found which gives the operator considerable trouble in changing from one gear to another, owing to the gears grinding together instead of going into mesh easily. If this trouble appears by degrees in a car ordinarily well-behaved, it is a pretty sure indication that the gear-shaft bearings have been cut so that the shafts are badly out of line, and trouble of this sort should be investigated at once, as nothing will wear the gears so fast as to mesh improperly.

Running on High-Speed Gear. Where there are three speeds, the highest speed is usually the direct. In some instances where there are four speeds, the third is the direct. It is generally considered best to keep on the direct-drive gear as much as possible, because it gives less heating, and there is less friction in engine and

Purchase full membership to immediately unlock this page

DELVE INTO FANTASY, MAGIC, MYTHOLOGY & FOLKLORE

Forgotten Books' Full Membership gives access to 797,885 ancient and modern, fiction and non-fiction books.

Continue

*Fair usage policy applies

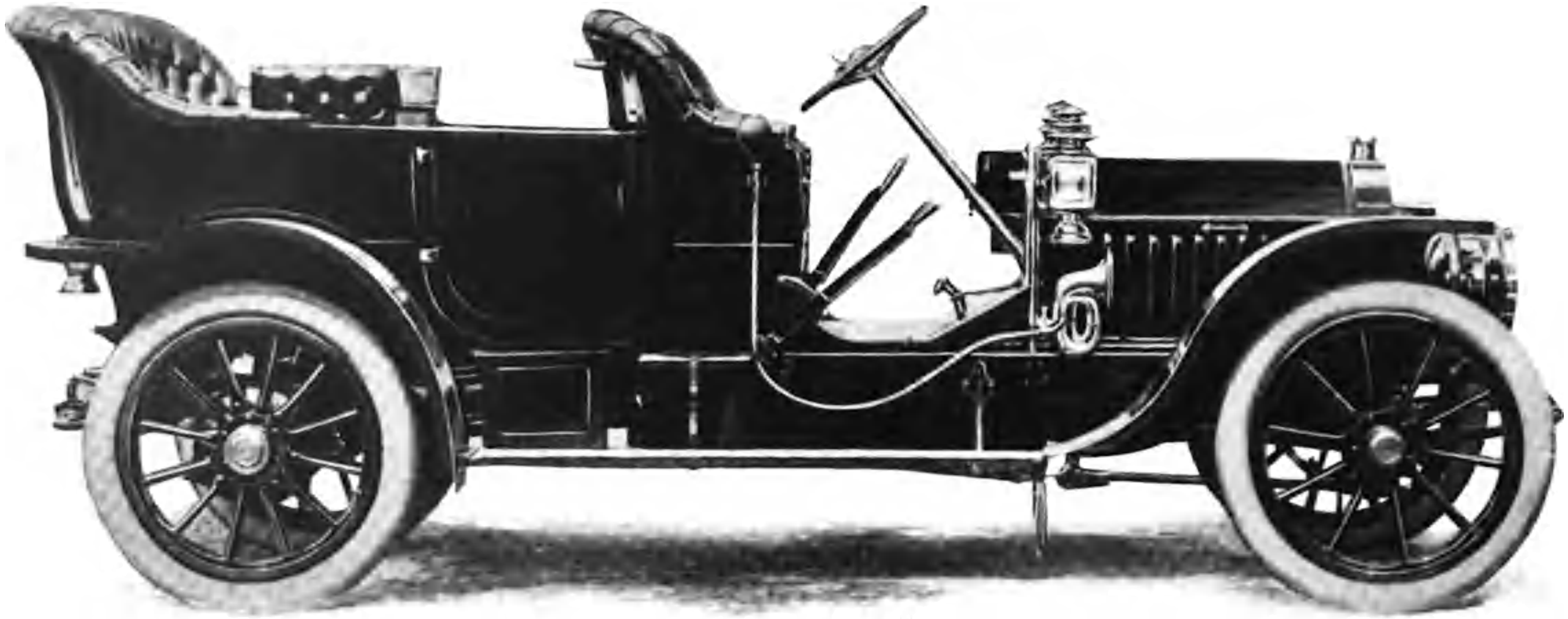

TOURING CAR, MODEL 19, FOUR-CYLINDER, THIRTY HORSE-POWER
Peerless Motor Car Company, Cleveland, Ohio.

transmission and less lost work. When the engine speed gets so low that the strain is felt in each stroke in the parts, it is best to change to lower gear.

The prevalent fad of climbing all hills on the high-speed gear is a great mistake. Although it may be possible to force a car up a hill on this gear, the time taken will be as a rule just as long as if the lower gear had been used, and the strain on the engine and transmission is unnecessarily great.

DRIVE

The clutch and clutch-shaft constitute the connecting portion between the engine and the speed-changing or transmission systems. The term *transmission*, in its general sense, includes also the connections between the transmission or speed-changing gears and the rear-axle driving system. The prevailing types of transmission from the gears to the rear system, and generally designated by the term *drive*, are:

1. Single-Chain Drive.
2. Double-Chain Drive.
3. Direct or Shaft Drive.
4. Friction Drive.
5. Cable Drive.

It is claimed that the single-chain drive is more efficient than either the shaft or double-chain drive. However, a single-chain system necessitates the hanging of the engine lengthwise with the chain, or the use of an extremely long chain extending to an engine under a hood.

The shaft drive is generally acknowledged to be more efficient than the double-chain drive, because there are fewer points of friction. The shaft drive eliminates two bearings, besides doing away with both chains and four sprocket-wheels.

The direct drive requires the use of one or two universal joints to provide for any change in alignment between the clutch-shaft and the rear-axle drive-shaft. The *universal joint* has been a part of automobile mechanism that has caused a great deal of trouble to manufacturers whose design of joint has not been liberally and accurately proportioned and made of the best material. These difficulties have been overcome as designs of universal joints have improved; and for several years, every Vanderbilt race has been won with a shaft-

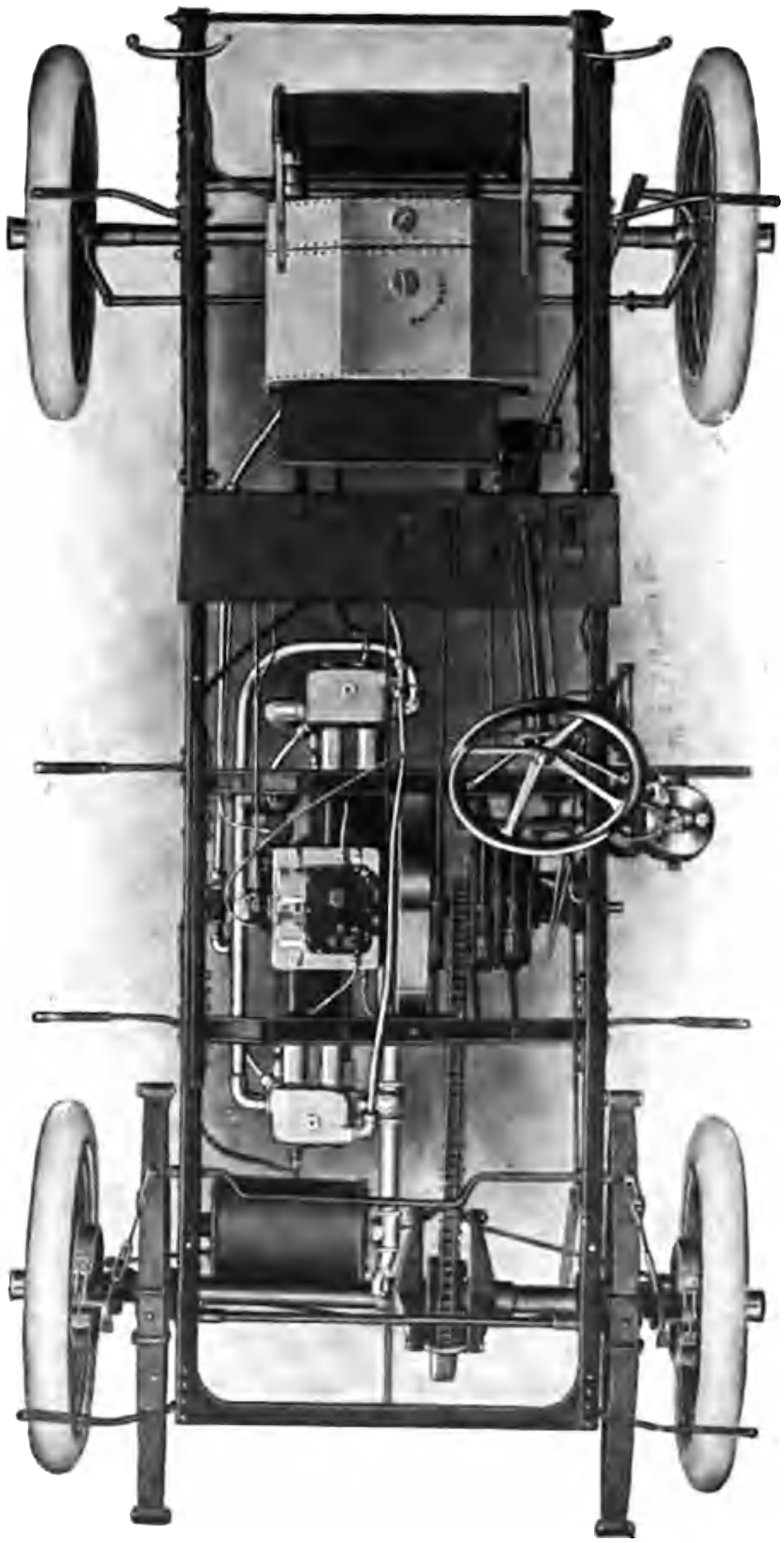

Fig. 107. Chassis of Reo Two-Cylinder Car, Single-Chain Drive.
Showing how motor is placed in frame, and power transmitted from engine to rear wheels.
Reo Motor Car Company, Lansing, Mich.

Purchase full membership to immediately unlock this page

HISTORY

Tens of thousands of important historical sources, many previously unobtainable, are now available for the first time with a Forgotten Books Full Membership.

Unlimited Access
$8.99/month

Continue

*Fair usage policy applies

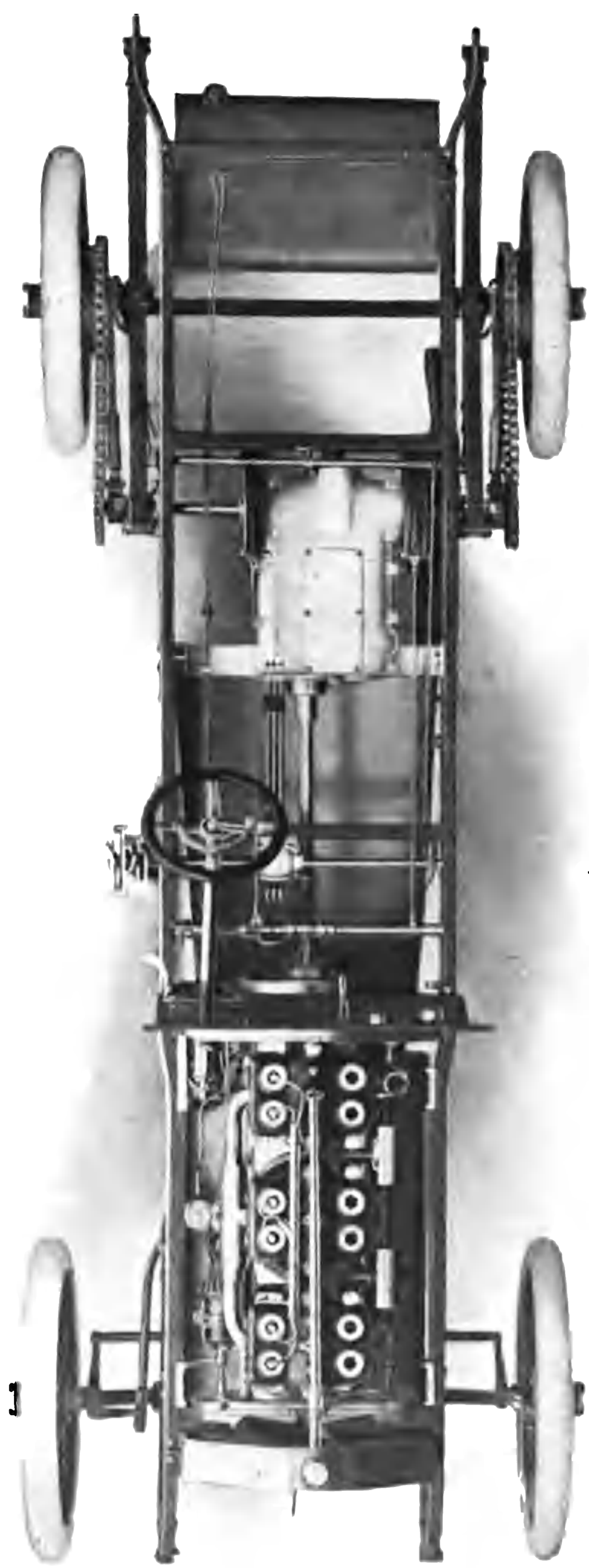

Fig. 108. Chassis of a Six Cylinder American Locomotive Car, Double-Chain Drive. American Locomotive Automobile Company, New York, N. Y.

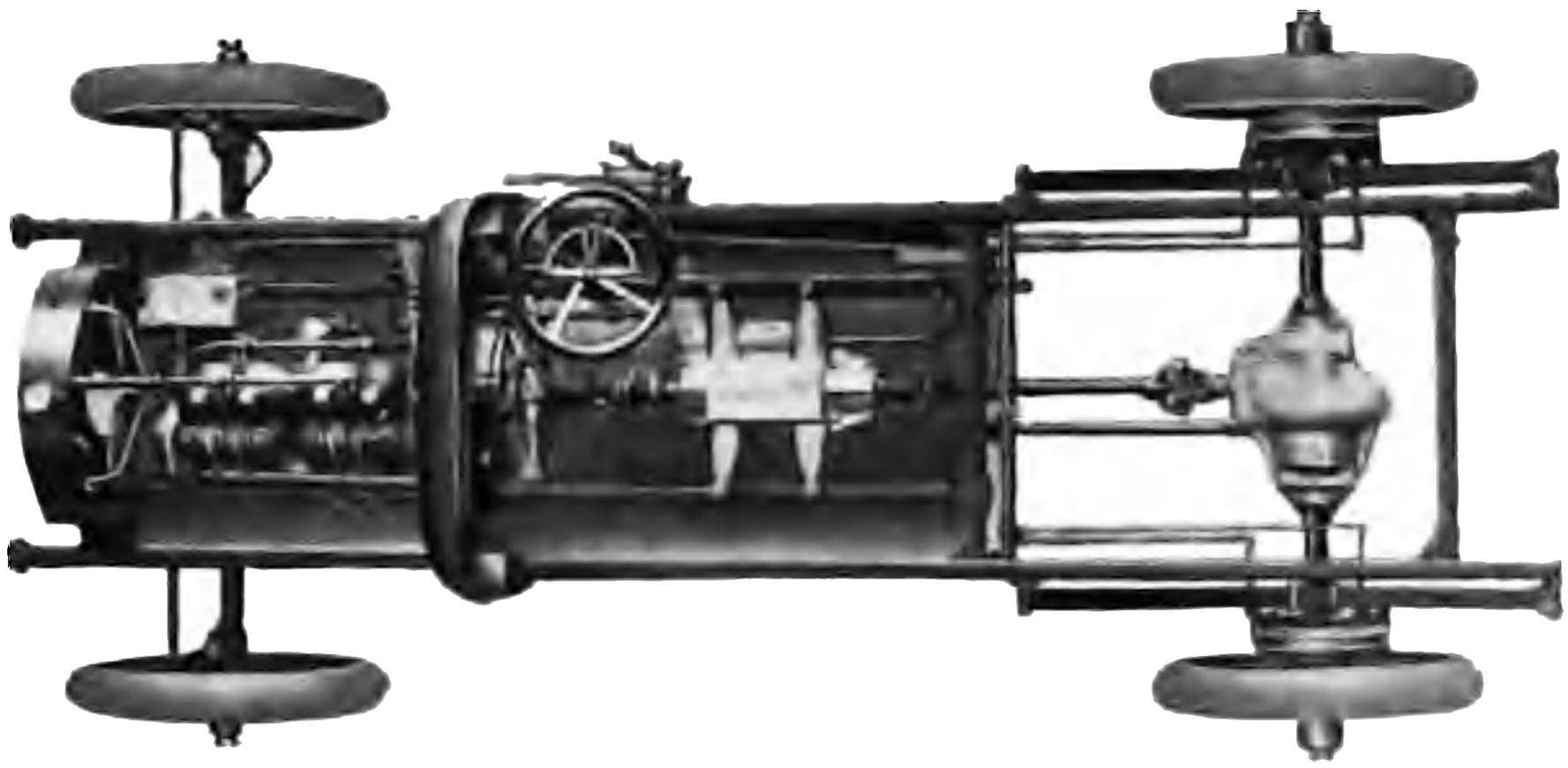

Fig. 109. Chassis of Studebaker Model L Car, Showing Direct or Shaft Drive, with Two Universal Joints.
Studebaker Bros. Mfg. Co., South Bend, Ind.

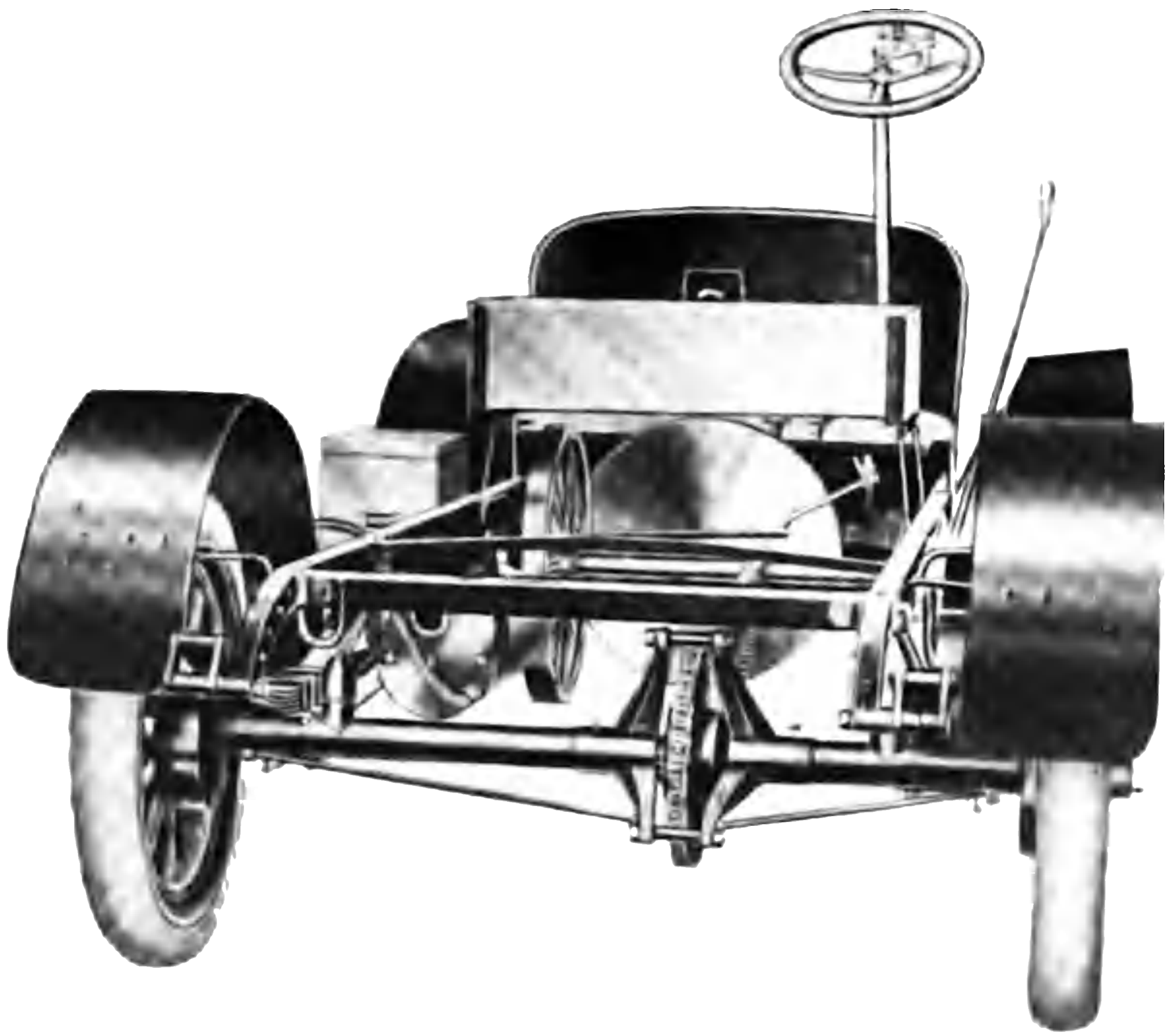

Fig. 110. Two-Disc Friction Transmission as Used in Cartercar.
Motor Car Company, Detroit, Mich.

shape at one end, has the hardened pin *J* running through it, upon which work two steel squares *K* sliding in slots in the main portion of the joint *A*, thus permitting a universal movement and also the sliding fore-and-aft movement of the driving-shaft, due to the action of the springs.

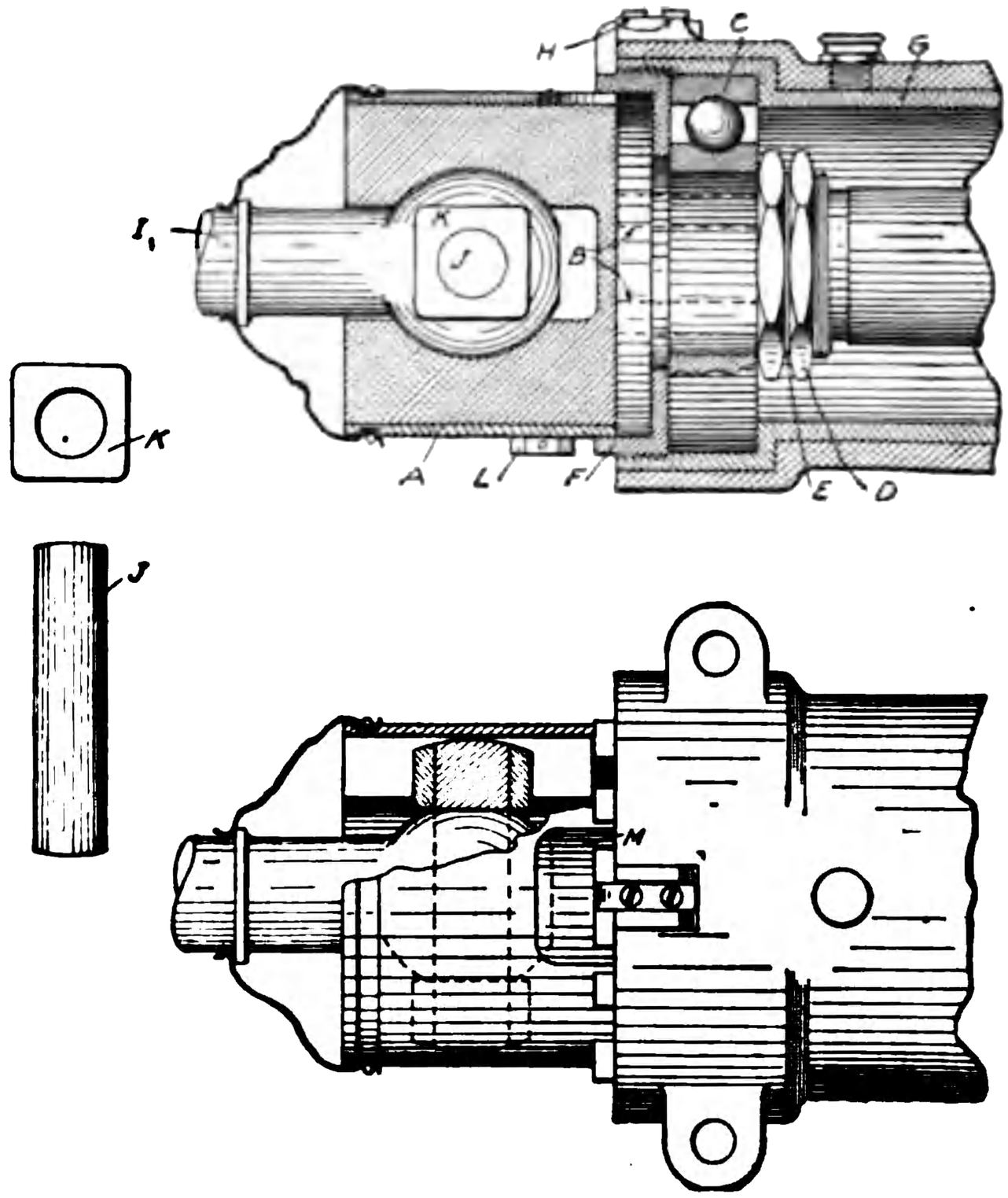

Fig. 111. Details of Universal Joint in National Car. National Motor Vehicle Company, Indianapolis, Ind.

There is a tubular sleeve which encloses the working parts of this joint, which is held in place by the cap screw *L*. An oval hole in the sleeve at *M* allows the removal of the squares, and permits the packing of the joint with grease, by turning it through an angle of 90 degrees. The end of the joint is covered by a cone-shaped piece of rawhide, fastened at one end to the sleeve and at the other end to the drive-shaft. A small hole through the center of the shaft allows some oil to flow into the joint from the transmission case.

Differentials or Balance Gears. When a car is turning a corner or passing over uneven places in the road, one rear wheel must turn faster than the other. It is necessary to provide mechanical means for this unevenness of turning, at the same time that uniform rotating power is furnished through the drive-shaft or driving sprocket.

Figs. 112 and 113 show how this is accomplished by means of the *differential* or *balance gear*. Fig. 112 is a view of the Studebaker Model F rear axle, showing housing removed and balance gear dis-

Purchase full membership to immediately unlock this page

DELVE INTO FANTASY, MAGIC, MYTHOLOGY & FOLKLORE

Forgotten Books' Full Membership gives access to 797,885 ancient and modern, fiction and non-fiction books.

Continue

*Fair usage policy applies

sides, and variations of speed between the two rear wheels are taken care of by rotation of the small pinions in opposite directions. Fig. 113 is a view of the Peerless differential. The principles of action are the same as in the one just described, the only difference being that small pinions carried on the large driven bevel gear are located directly in the center of the rear axle in line with the driving pinion.

Owing to the heavy strain on the large driven bevel gear,

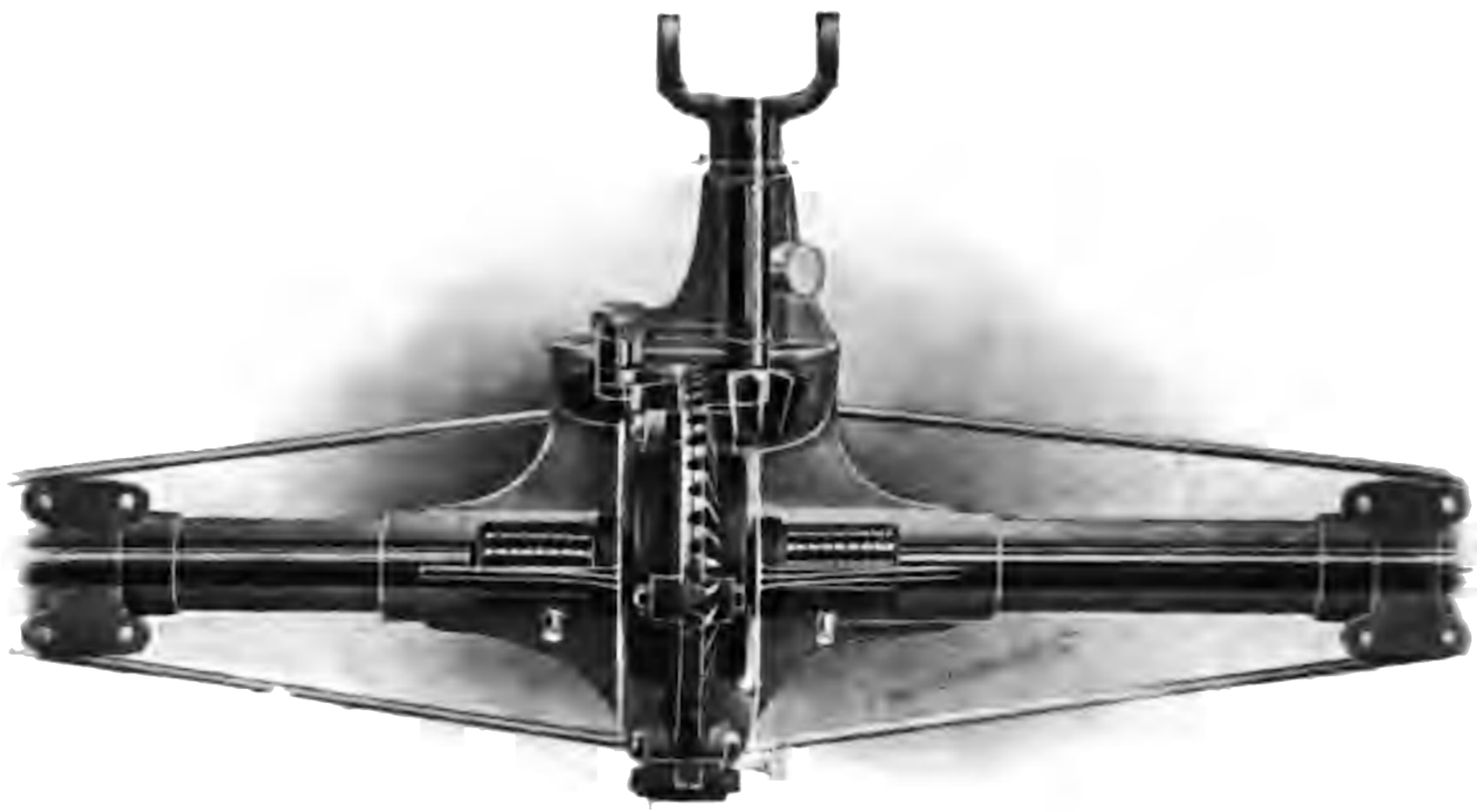

Fig. 114. Rear-Axle Construction on Maxwell Car, Showing Roller Thrust to Relieve Strain on Large Driven Bevel Gear of Differential Maxwell-Briscoe Motor Company, Tarrytown, N. Y.

a number of makes provide a *thrust roller-bearing* against the back of the large bevel gear—that is, on the side opposite the teeth.

Fig. 114 is a view of the rear axle of the Maxwell car, showing this roller thrust.

LUBRICATION

Pipes for lubrication should not be too small. Sharp turns in oil pipe-lines should be avoided.

Oil and Oiling. The life and amount of service and satisfaction to be obtained from a motor depend very largely on the amount and quality of the oil used. The proper gas-engine cylinder oil should have a flash point of about 500 or 600 degrees Fahrenheit, and should contain only the minimum amount of carbon. It should always be filled at the temperature used. This necessitates using a different weight of oil in warm weather from that

used in cold weather. For warm weather, use a heavy oil; and as the weather grows cooler, change to a lighter oil.

A teaspoonful of powdered graphite mixed with a little water inserted through the relief-pipe, will occasionally help greatly to reduce the amount of oil used.

The oil should be entirely drawn from the engine case about once a month, and all of the parts washed with kerosene. In refilling with oil, it should be deep enough so that when the connecting rods are down they will dip into the oil about $\frac{1}{8}$ inch.

After cleaning, running the engine for a few revolutions with the case filled with kerosene will cut out any oil which may have become gummed on the cylinders or about the piston rings.

If the motor has not been run for some time, this should be done. If the motor is in constant service, it is not necessary, though it will do no harm.

For the transmission gears and differential gears, use a heavy oil corresponding to a steam-engine cylinder oil of cheap grade. Each of these gear cases should be about one-third full. For universal joints, use Albany grease. This is better than vaseline, as a slight heat transforms vaseline into liquid, and it runs out.

If springs squeak, force a small quantity of oil into the joints.

There is usually altogether too much lubricating oil applied to an engine. Six to eight drops a minute is ample for cylinder lubrication.

Chains, after having been thoroughly cleaned with kerosene, are dipped into melted tallow, and replaced after the tallow is cooled.

Forgetting to lubricate bearings is likely to cause firing of bearings, or *hot boxes*, which will necessitate stopping and delay.

The greatest drawback to the success of air-cooled motors, it has been claimed, is the problem of lubrication. The following method is adopted in the Marmon car to solve this problem:

The crank-shaft is drilled with one-inch holes from end to end through the main bearings and through the four crank-pins. Three-eighths-inch holes are drilled through the arms of the cranks, connecting with the one-inch holes. It is claimed that this drilling does not weaken the shaft—in fact, that it strengthens it by removing internal strains on the forging. After the drilling is done, the outer ends of all the holes, except the one in the fore end of the shaft, are plugged, thus forming a continuous oil passageway from the forward

end entirely through the shaft into the rear main bearing. The crank-shaft is then drilled with radial holes at the center of every bearing, and these holes lead the oil from within the shaft directly into the bearing. A pump draws the oil through a screen from the bottom of the oil well, and forces it through a tube into the end of the crank-shaft, maintaining a uniform pressure constantly. It is claimed that oil smoke is never seen coming from the muffler of an engine with this type of lubrication.

Mechanically Operated Lubricators. Gravity and pressure systems of lubrication depend upon needle-valves, and the oil supply

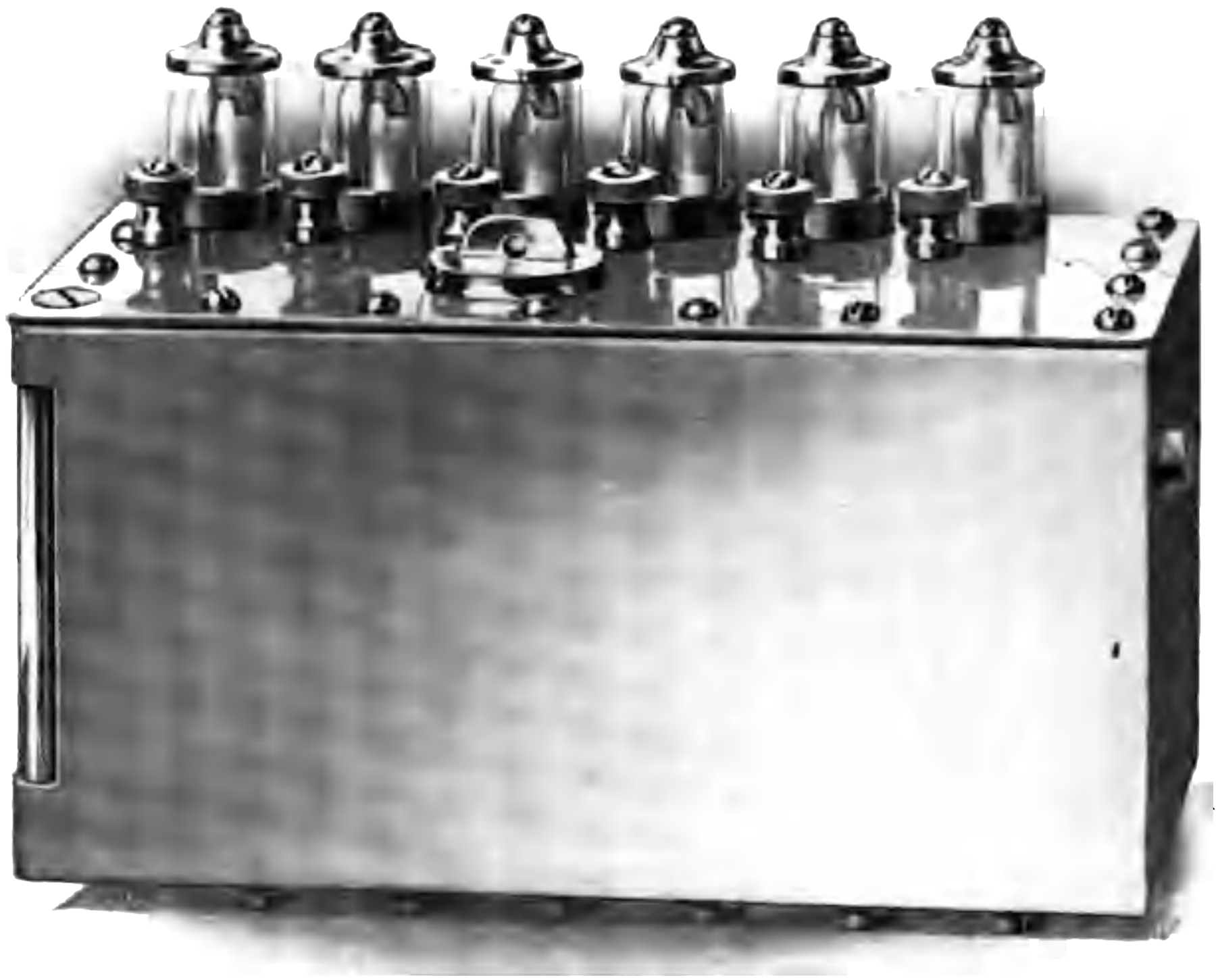

Fig. 115. External View of McCord Force-Feed Lubricator (Six Feeds); Polished Sheet-Brass Reservoir, Rotary Drive. McCord & Company, Chicago, Ill.

is the same for all speeds. Needle-valve regulation is difficult, because it is interfered with by the slightest particle of foreign matter in the oil and by temperature changes. An engine running at high speed requires more oil than at slow speed. Too much oil gums the bearings and cylinders, and increases friction; and with too little oil, they are liable to damage. Oil for automobile lubrication has to pass through a number of feet of small tubing before it reaches

Purchase full membership to immediately unlock this page

HISTORY

Tens of thousands of important historical sources, many previously unobtainable, are now available for the first time with a Forgotten Books Full Membership.

Unlimited Access
$8.99/month

Continue

*Fair usage policy applies

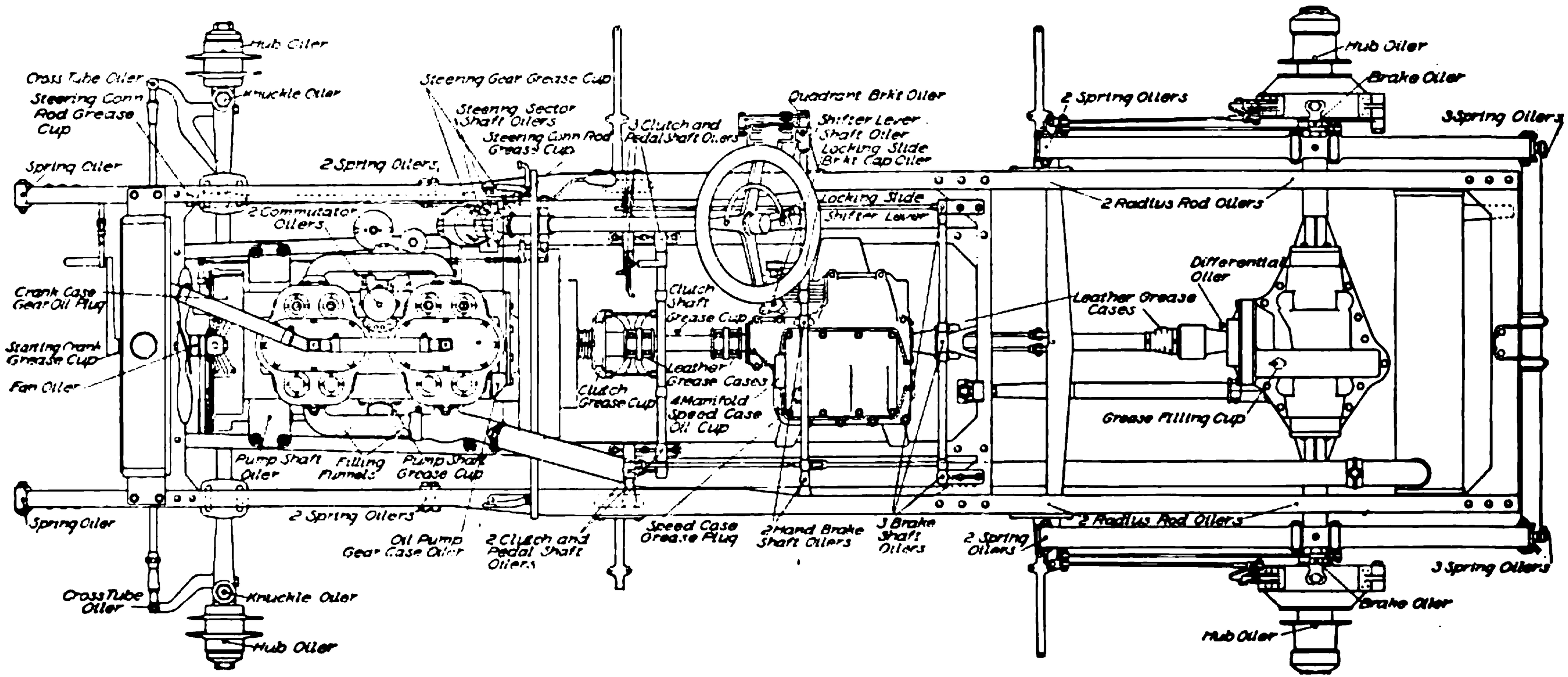

Fig. 117. Plan View of Peerless Car, Showing Principal Oiling Points. Peerless Motor Car Company, Cleveland, Ohio.

smallest particle of foreign matter from being forced to the bearings. This is in full view of the operator, and can be removed and cleaned by taking off the brass cap. These sight-feed glasses are simply a protecting case for the oil drops, and contain no liquid adhering to the glass, which has always been a great disadvantage in the liquid sight-feed glasses. The amount of oil being pumped is at all times visible to the operator. The operation is as follows:

The pumps are driven by the eccentric *J* and adjustable lever *E*, by means of a worm gear *K* connected to the cam-shaft or other rotating part of the engine by the pulley or sprocket *O*. (In some lubricators this wheel is a thin ratchet wheel actuated by a pawl.) The stroke of supply-pump *C* is varied (thus increasing or diminishing the amount of oil pumped) by means of the sliding arm *F*, which forms a movable fulcrum for the pump-lever *E*. When the regulating stem *G* is screwed down, the fulcrum is raised and the stroke of the pump-piston is lengthened. Lowering the fulcrum decreases the stroke of the pump-piston and diminishes the amount of oil pumped. This pump delivers oil through the oil standpipe *S*, from which it drops to the delivery pump *D* attached to the jaws of the operating lever. The stroke of this pump is constant, and every drop of oil which falls into the pump chamber must be forced out through the delivery pipe *W* and on to the point of lubrication.

With the car running from fifteen to twenty miles an hour, each cylinder oiler should show ten drops per minute.

As a typical illustration of where lubrication should be applied, and how often, it will be well to study carefully Figs. 117 and 118, which show plan view and side elevation respectively of the Peerless car, with lubricating points plainly designated.

For this car the following lubricating instructions are given:

DAILY OIL AND GREASE

Eight grease cups should be given careful attention by the operator. These are located as follows: (1) On the right of the water pump, exhaust side of motor; (2) and (3) on the front end and rear end of the connecting rod which joins the steering column with the steering knuckles; (4) on the outside of the casing enclosing the worm and sector mechanism at base of steering column; (5) on the cranking device directly under the radiator well in front; (6) on the collar behind the spring on the clutch; (7) on fan-shaft; and (8) on driving-shaft between clutch and transmission. The above-mentioned grease cups should be filled with grease and screwed up a turn every day

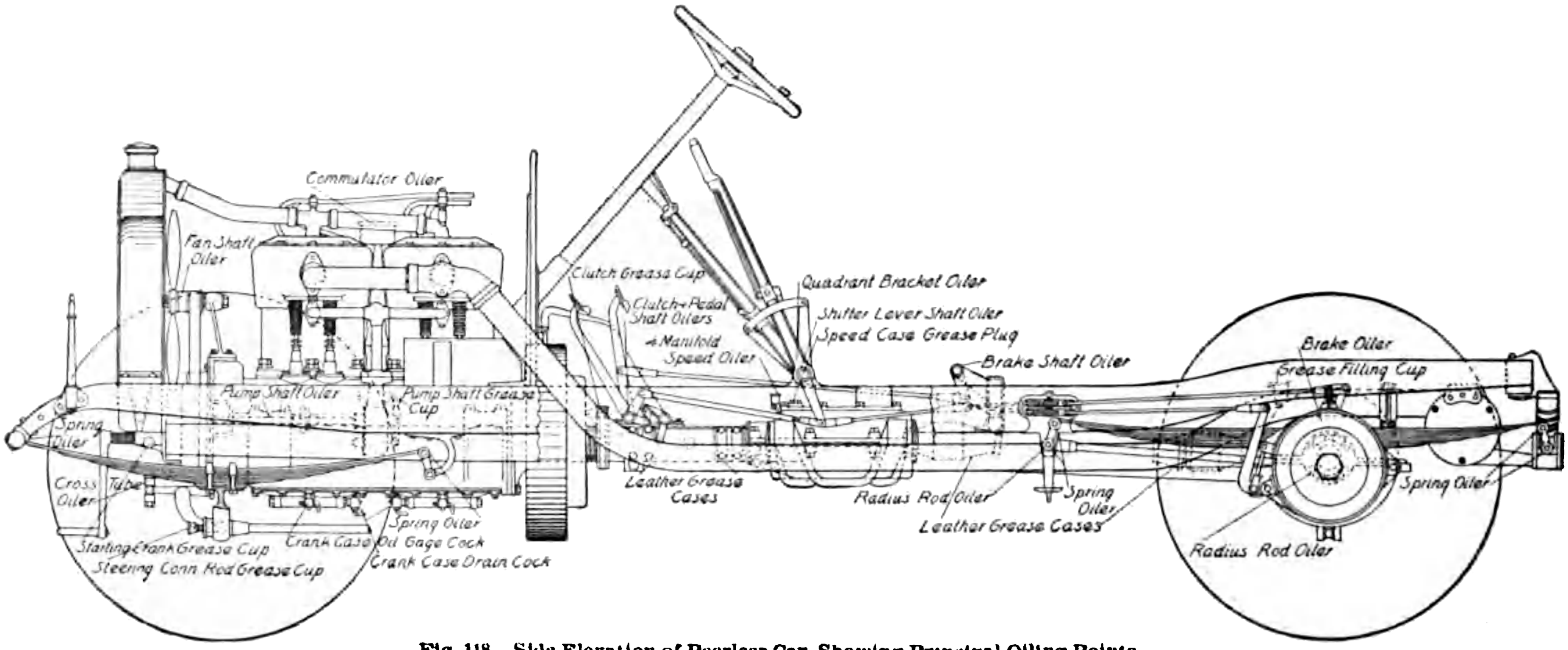

Fig. 118. Side Elevation of Peerless Car, Showing Principal Oiling Points. Peerless Motor Car Company, Cleveland, Ohio.

Purchase full membership to immediately unlock this page

DELVE INTO FANTASY, MAGIC, MYTHOLOGY & FOLKLORE

Forgotten Books' Full Membership gives access to 797,885 ancient and modern, fiction and non-fiction books.

Continue

*Fair usage policy applies

At the end of three months the top of the transmission case should be removed, and the case flushed with kerosene and refilled with grease and oil. This may be done by drawing off the oil through the drain-plug at the bottom of the transmission case.

Universal Joints. The universal joints between the clutch and transmission and between the transmission and the rear axle are packed in grease, and housed in leather cases held securely in place by a brass band easily removable for replenishing with grease. This should be done about once in two months.

Wheels. The wheels should be taken off, cleaned, and packed with grease about once in two months or oftener, depending on usage. The oilers on top of the rear and front hubs should be filled daily.

Fig. 119. Rear Wheel of Studebaker Model G Car, Showing Hub Drum and Brake. Studebaker Bros. Mfg. Co., South Bend, Ind.

Differential. Under ordinary conditions the bevel and differential gears should be cleaned once in three months. The cover of these gears should be taken off, and all the old grease removed and the gears carefully packed with new grease, care being taken to see that the grease is well worked in. The differential case holds about seven pounds of grease. By means of a plug in the differential case, it should be replenished with grease and oil at least once a month.

BRAKES

Most cars are provided with two brakes—one known as the *ordinary brake*, and the other as the *emergency brake*. It is most convenient for the operator to have the ordinary brake operated by a foot-pedal, and the emergency brake by means of a lever.

Formerly one of the brakes was applied to the clutch or drive-shaft. This method has been found to throw an undue strain on these parts, and the best modern practice is in favor of *internal* and

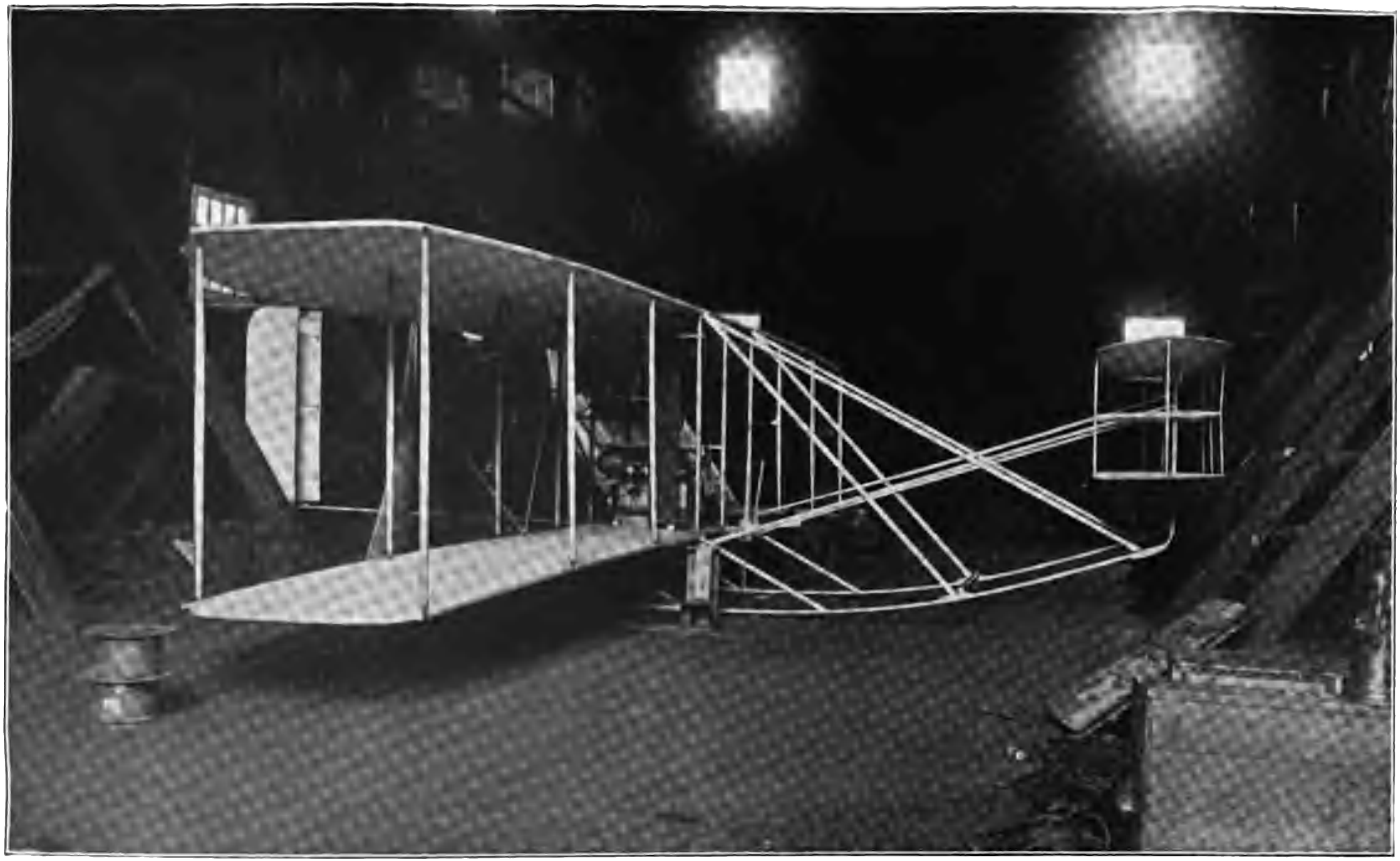

Copyright, 1908, by Waldon Fawcett.

AËROPLANE BUILT BY THE WRIGHT BROTHERS (WILBUR AND ORVILLE) OF DAYTON, OHIO, FOR THE UNITED STATES GOVERNMENT

With machines embodying the structural features here shown, the Wright Brothers have broken all previous world's records for length of flight, ease of evolution, etc.

Purchase full membership to immediately unlock this page

HISTORY

Tens of thousands of important historical sources, many previously unobtainable, are now available for the first time with a Forgotten Books Full Membership.

Unlimited Access
$8.99/month

Continue

*Fair usage policy applies

the wheels clear the floor, and spinning the wheels around by hand with the brakes in released position, it may be readily noticed if there is any dragging action.

Fig. 121 shows a brake drum of the Premier car, with details of the internal expanding and external contracting brakes.

BEARINGS

Bearings are either *plain cylindrical, cylindrical in halves, roller bearings, ball bearings,* or *annular.*

Plain cylindrical bearings are usually bronze sleeves, and are used at points where no adjustment is expected to be necessary.

Fig. 121. Brake Drum.
Showing detail of internal expanding and external contracting brakes.
Premier Motor Mfg. Co., Indianapolis, Ind.

Cylindrical bronze bearings cast in halves, the halves being separated by shims of soft metal or leather liners, are used in various parts of different makes of cars, a good many cars using this type in the main or crank-shaft bearings of the engine. In this type a moderate amount of wear may be taken up by tightening the cap screws which fasten the halves of the journal-boxes together. A greater amount of wear may be taken up by removing the liners or shims, and replacing with others somewhat thinner.

Fig. 122 shows the American Ball Bearing Company's front hub. The nut *A*, which adjusts the cone *D* on the right-hand axle, is provided with a right-hand thread, and the set screw *B* has a left-hand thread. The dust cap *C* has a left-hand thread. All of these parts on the left-hand axle are reversely threaded. To remove front wheels, unscrew brass cap *C*; and by means of a hexagon wrench, unscrew adjusting nut *A*, but do not alter the position of set screw *B*. When replacing wheels, be sure that the ground angular surface on cone *D* is in contact with the balls. The nut *A* should be set firmly.

To adjust front wheel bearings, proceed as above; withdraw the set screw *B*; screw on the adjusting nut *A* until the adjustment is right.

Now turn off the nut *A* about one half-revolution and tighten the set screw *B*. If there is lost motion in the bearing, loosen nut *A*, back out screw *B* a little, and tighten nut *A* again. A bearing is properly adjusted only when screw *B* makes it impossible to force nut *A* on any further, and all lost motion is out of the bearing, but without being tight. Remember that one can easily put tons of useless and harmful pressure on the bearings with careless use of the wrench.

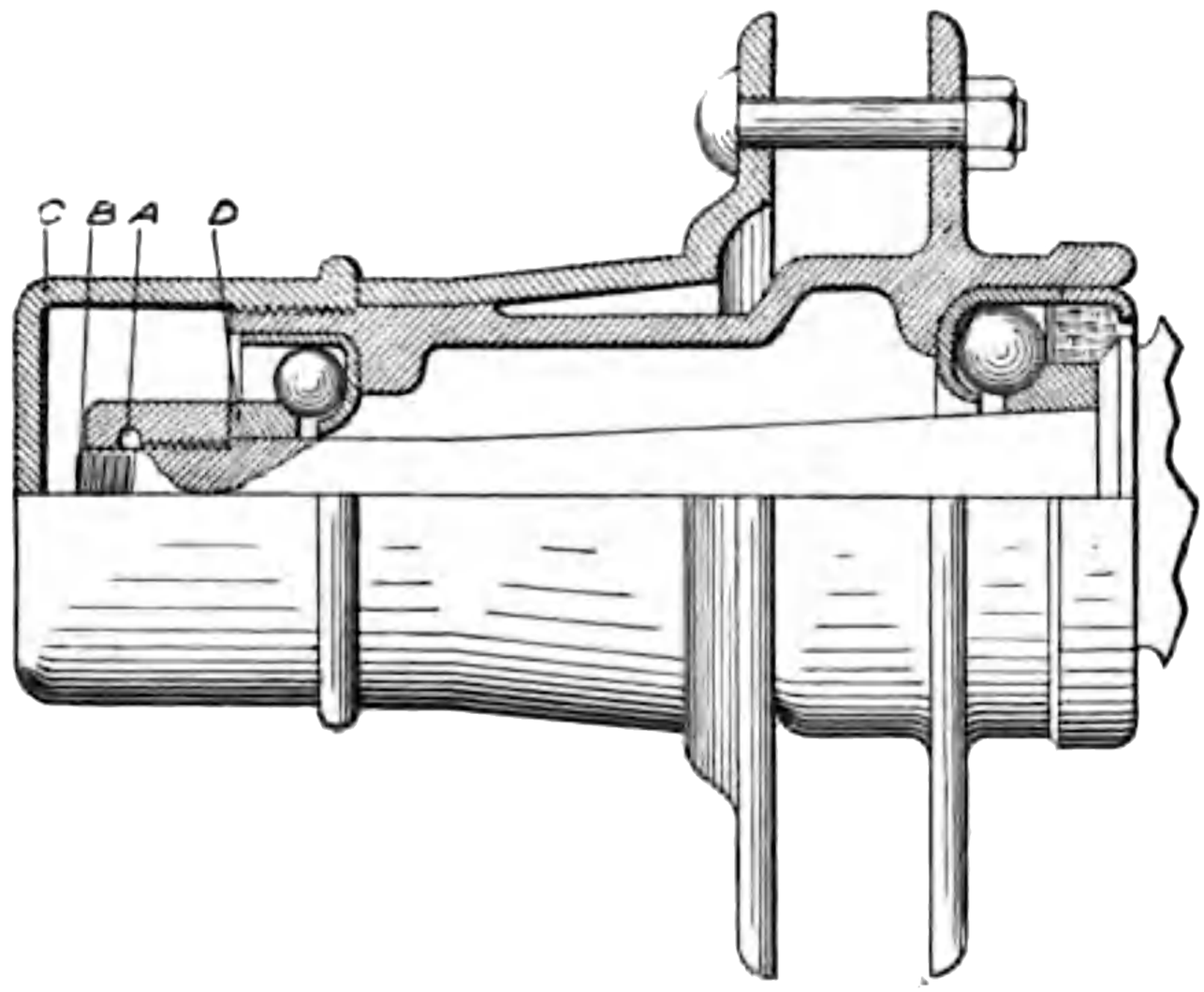

Fig. 122. Ball-Bearing Front Hub.
American Ball Company, Providence, R. I.

Fig. 123 shows the Timken roller bearing as applied to the Franklin car. The part of the cut at right shows a correct adjustment, and the part at left, a faulty adjustment of this bearing. To

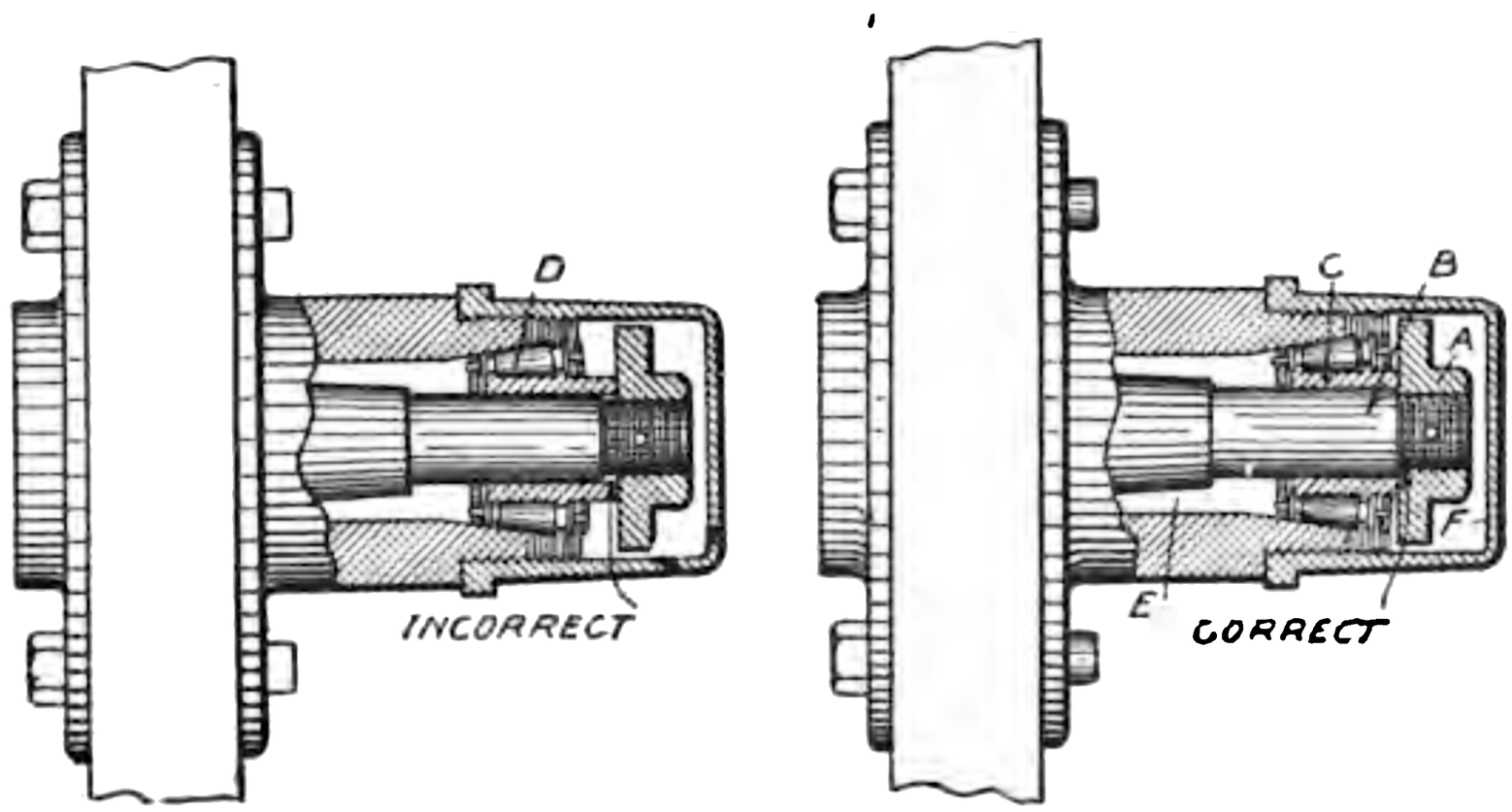

Fig. 123. Timken Roller Bearing as Used in Franklin Car.

be correct, the axle lock-nut *A* must be locked tight against the shoulder *B* on the spindle. When the nut is against this shoulder, the wheel must revolve freely without side play. In making the adjustment, if the wheel becomes tight before the nut shoulders, the

cone C is too long, and must be ground off on its face. If, after the nut A is screwed up tight against the shoulder, there is side play in the wheel, the cone C is too short; and the correct length must be

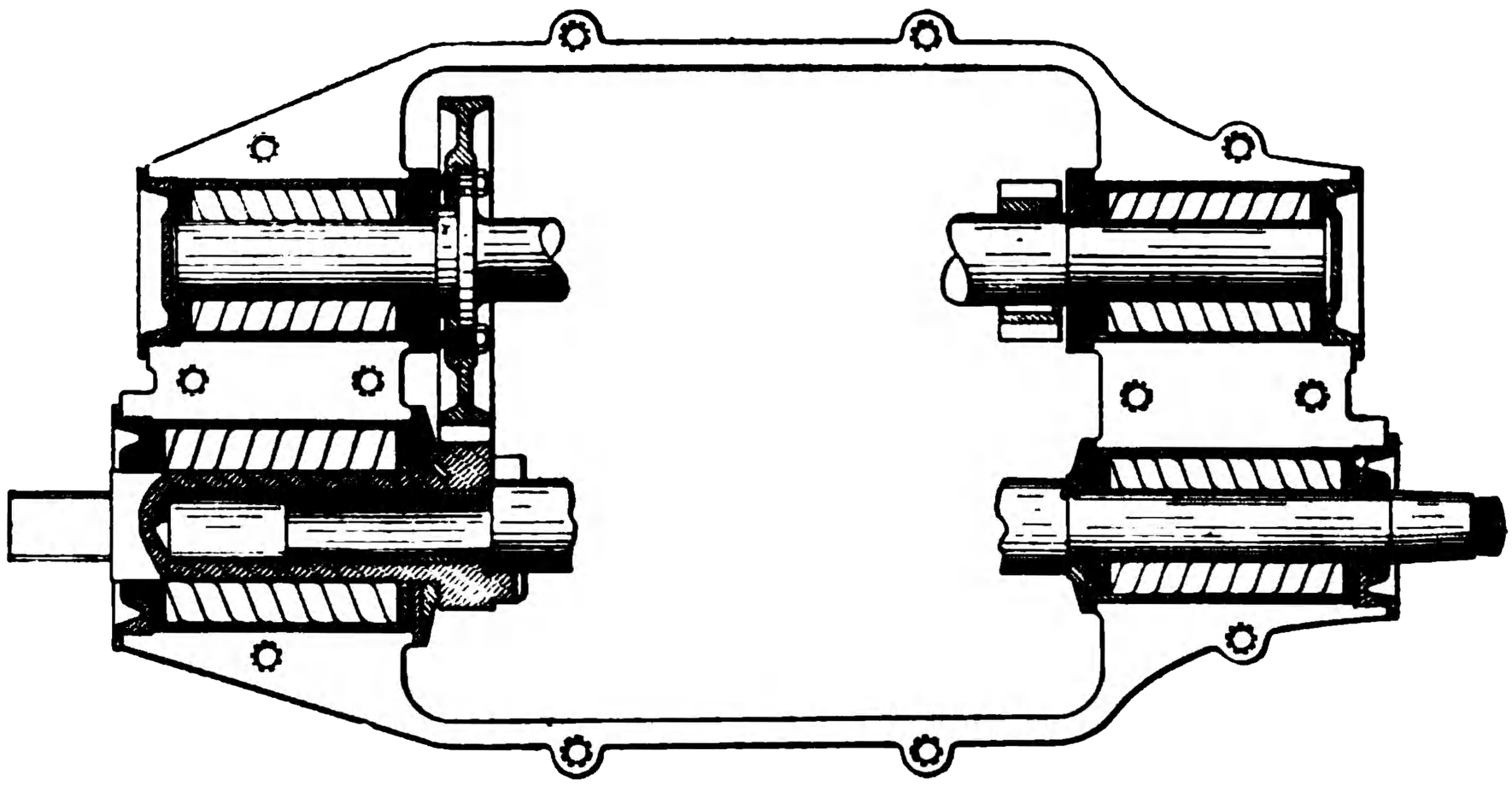

Fig. 124. Hyatt Roller Bearing as Used in Transmission Case.
Hyatt Roller Bearing Company, Harrison, N. J.

made up by placing one or more thin metal washers between C and A, until the bearing has no side play, and the nut A is tight against the shoulder B.

Fig. 125. Hyatt Standard Bushing
Hyatt Roller Bearing Company,
Harrison, N. J.

A bearing incorrectly adjusted, as shown in the left part of the cut, will act as follows: As the wheel revolves forward, friction is exerted by the cone C upon the nut A, causing it to screw in toward the shoulder. This forces the cone C up on the spindle, and jams the rollers D so that they will break and thus destroy the bearing.

Fig. 124 shows the Hyatt roller bearing as applied to a transmission gear case; and Fig. 125 shows a Hyatt standard shaft-box. Bearings of this type are very generally used in transmission cases and also in rear axles. They have the advantage of not requiring as much attention as plain bearings, in the way of lubrication; also the advantage of flexibility, enabling them at all times to present a bearing

Purchase full membership to immediately unlock this page

DELVE INTO FANTASY, MAGIC, MYTHOLOGY & FOLKLORE

Forgotten Books' Full Membership gives access to 797,885 ancient and modern, fiction and non-fiction books.

Continue

*Fair usage policy applies

a screen or preferably a chamois skin in the funnel; then replace the gasoline and water-plugs or screw-tops, seeing that they are firmly but not too tightly fastened.

See that the cock in the gasoline line leading from tank to carbureter is opened, and try whether gasoline flows freely to carbureter by pressing down the primer until gasoline flows from the carbureter. If a motor has been stopped only a short time, it will not be necessary to make use of the primer. In fact it is undesirable to use the primer when the engine is still warm, as it is likely to give too rich a mixture, and such a mixture will not explode.

See that all oil-cups are full, and that they are adjusted to feed approximately 15 drops per minute.

See that the transmission is provided with a good supply of heavy oil. This will require attention about once a week. In cold weather a lighter oil will be required here than in warm weather.

TO START THE ENGINE

First, disengage the clutches.

Second, put on the brakes.

Third, open the throttle slightly.

Fourth, turn the switch handle to the "On" position.

Fifth, push the spark-lever away back to its point of greatest retardation or lateness.

Sixth, when the engine is cool, it may sometimes be necessary to prime the carbureter slightly by lifting the carbureter float-needle. This is provided for in different ways in different cars and different carbureters. In some cases a rod is made to extend from the carbureter to some convenient point, such as the floor or dash or side of the car, this rod being so arranged that by pushing it the float-valve of the carbureter is opened. Do not prime too much, as you are likely to get too much gasoline at the start; and the only remedy for this is the tiresome process of repeatedly cranking until all of the too rich mixture has been pumped through your engine.

Seventh, turn the crank clockwise, pulling upwards with a quick, sharp pull. *Never push downward.* The reason for this is that if the spark is accidentally advanced, the charge may explode before dead center, and kick backwards, resulting in the straining or breaking of the operator's arm.

Make sure that spark lever is away back, that switch is turned on, and that you can hear the vibrator buzz every time the engine goes over compression. A weak battery will cause faint buzzing.

Failure to Start. Should the engine not start at a few turns of the crank, it is of no use to work one's self tired keeping on cranking. It is best to see whether the batteries have been switched on, whether the gasoline is turned on, and if the ignition is at the right point. It may be that the carbureter is flooded, delivering too rich a mixture. In this case, considerable cranking will be necessary in order to empty the engine of the excess of gasoline, the supply being shut off during this cranking.

Other possible causes of failure to start are a sooty spark-plug or dirty commutator. Note whether the spark-coil on the dash buzzes during the cranking. If so, it indicates that the ignition coil and connections are not at fault. More likely the reason will be that the spark-plugs are dirty or sooty. Remove the plugs, and insert new ones, which should always be kept on hand. The plugs removed can readily be cleaned and used in their turn for replacement, if the plugs in use become fouled. Excessive cold, or water in the gasoline, or faulty compression, are possible causes.

The carbureter may be empty There may be dirt in the pipes or carbureter. Gasoline in the carbureter may be stale. Drain and clean the carbureter, and give it a charge of fresh gasoline. The valves may be gummy and need cleaning. For instructions regarding carbureters, see pages 55 and 61.

The springs of the inlet valves may be too strong and may need loosening. For instructions in regard to valves, see page 56.

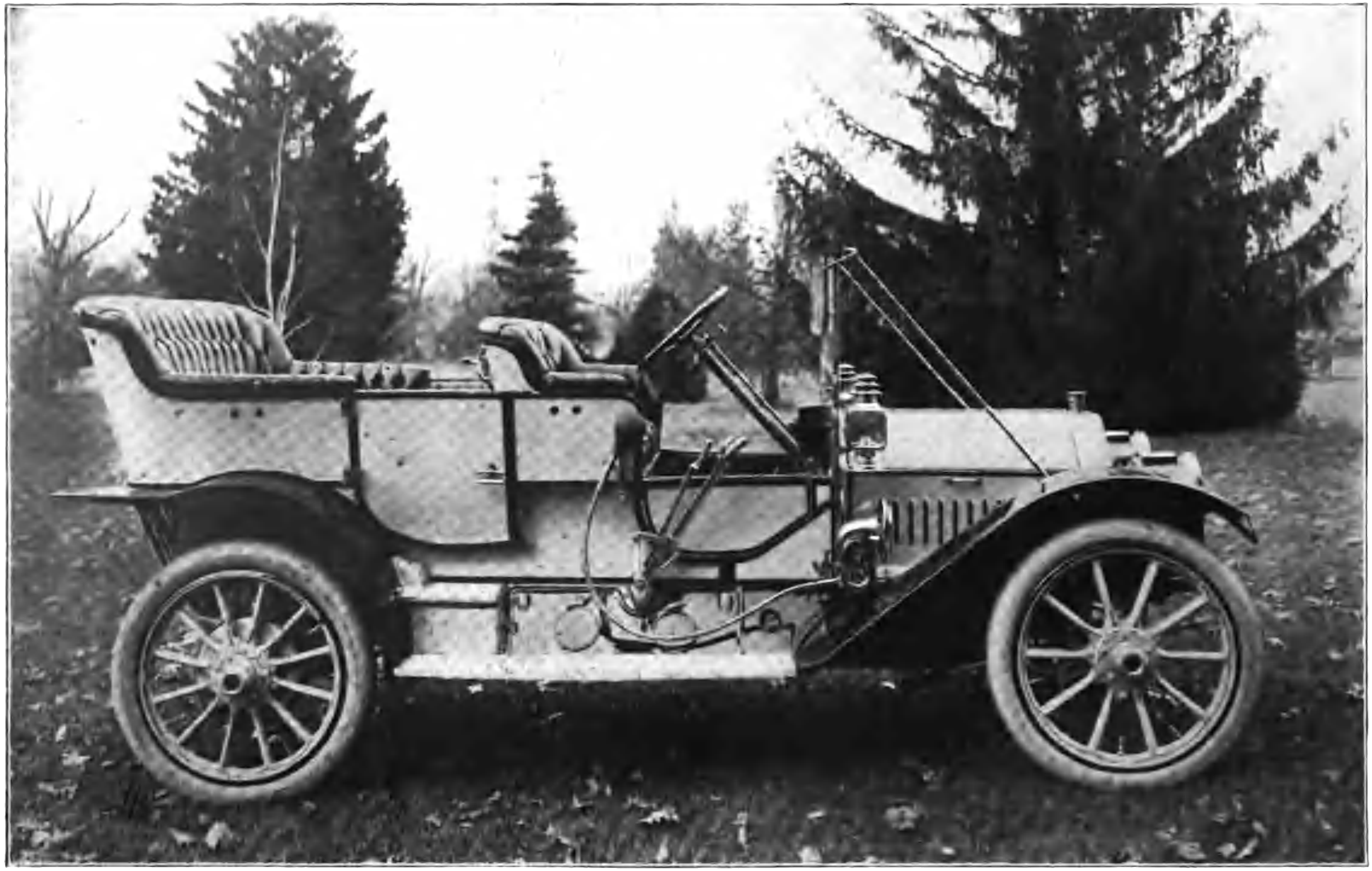

OLDSMOBILE TOURING CAR, MODEL D.
Olds Motor Works, Lansing, Mich.

Purchase full membership to immediately unlock this page

HISTORY

Tens of thousands of important historical sources, many previously unobtainable, are now available for the first time with a Forgotten Books Full Membership.

Unlimited Access
$8.99/month

Continue

*Fair usage policy applies

condition is likely to be caused by leaky compression, for one thing. If caused at the exhaust or inlet valves, the valves will have to be re-ground. The remedy for poor compression is to stop the leaks, which will be found to be either past the valves or past the piston-rings. In the case of the valves, they can be made tight by re-grinding as elsewhere described. In the case of the piston-rings or piston scoring, the remedy may be either new piston-rings or re-boring and re-grinding of the cylinder or cylinders. Insufficient oil, or running the engine on a too much retarded spark, are also the causes of loss of power. Another cause may be that in attempting to make the engine absolutely noiseless, the cam movement may have been designed or altered so as to do away with clicking at the sacrifice of prompt valve action.

Misfiring due to improper mixture—namely, too much gasoline or too much air—will cause loss of power. Weak batteries will also cause irregular firing and loss of power, accompanied by considerable noise when the explosions do occur. A reserve supply of batteries should always be kept in the battery box. Loose connections or short circuits will also cause misfiring. All connections should be so tight that no vibrations of the car will loosen them. At the time of tightening connections, they should be perfectly bright and clean.

If a sudden break occurs in the spark-plug or wire, the trouble can usually be located. An intermittent short circuit will cause a sluggish and irregular ignition, and is harder to find. In this case a careful inspection of all wires needs to be made, to see that there is no abrasion of the insulation. It sometimes happens that a wire is broken inside the insulation. The break may be located by very slightly bending the wire at very short intervals.

A pocket voltmeter is used in locating short circuits. The voltage should be the same at all points of the circuit. If the voltage drops, it is a sign of leakage or a short circuit.

Other possible causes of sluggishness or loss of power are:

Dirt or water in the carbureter, which should be drained and cleaned.

The gasoline supply-pipe may be choked.

The gasoline may be stale.

There may be a partial vacuum in the gasoline tank through lack of an air-inlet. The remedy for this is to loosen the plug used for filling.

Valves may be dirty.

Valve spring may be weak.

Loss of power may be caused by a slipping clutch. If clutch is of the leather-faced type, the remedy is to clean the clutch with gasoline and apply castor oil at night.

Racing of Engine. This is apt to occur if the spark has been advanced too far and the engine accelerated too much for low speed. Another cause is that the clutch may be slipping, thus releasing the load.

Lack of Speed in Engine. When the engine lacks speed, it is likely that the valves do not open or close at the proper time. The lifters and connected parts wear in time. The valve movement then needs readjustment; that is, it needs readjustment between valves and lifters or cams. Loss in compression and proper spark will also affect speed. If the explosive charge is ignited just at the moment the engine is on dead center, the fullest force of the explosion and consequently highest speed are obtained. Naturally the engine must have some momentum before the spark can be used at this position; and failure to have the spark occur sufficiently early prevents full realization of speed.

Engine Stopping Completely. Valve in gasoline line may be loose, or may even have turned so as to be completely turned off. Gasoline may be all out. Battery may be exhausted. A wire may be disconnected or broken. There may be water in the carbureter. Valves may be broken. Spark-plugs may be broken. Connecting rod may be broken.

Knocking of Engine. The engine will knock if the ignition has been advanced too much; also if the engine is overheated. Want of lubrication, or poor oil, will cause knocking. Water in the cylinder will cause knocking. This indicates that there is a leak of jacket water into the inside af the cylinder. If connecting-rod bearings are down, engine will knock. Knocking in engines is also often caused by the carbureter flooding while the car is in motion; hence one place to test for improper adjustments with a knocking engine is the needle-valve and float-lever in the carbureter, as described in detail under "Carbureters."

Weak Batteries. Weak batteries are apt to deceive the operator, as they gain strength after a rest; and though the engine is apt

to start off smoothly, after a while there will be irregular action and missing of explosions. Naturally the first inspection would concern the spark-plugs, to see that they are clean. The next investigation would relate to the wiring, to see that all the connections are tight and that there is no break in the wires. If these are all found in good condition, it is very likely that the trouble is with the batteries.

It is customary to have two sets of dry cells, using only one set until they show signs of weakening, when the other set should be thrown into circuit. This is a temporary expedient, and should be followed by a replacing of the weakest dry cells by new ones.

A small ammeter is an inexpensive instrument, and very desirable for testing the usefulness or worthlessness of an individual cell. If the current is as low as one-half the rated output of the cell, the cell should be discarded.

A low temperature will always cut down the efficiency of dry cells temporarily, and in cold weather it is often necessary to put both sets into circuit. If they still show signs of weakening, they should be thoroughly warmed, and the higher temperature will temporarily raise the efficiency.

It is best to use generating batteries specially constructed for automobile use. There are a number of good makes on the market. Such cells are usually better encased, and are built to withstand jarring much better than the cheaper cells made for house wiring.

The usual voltage required to give a satisfactory spark for ignition is from six to ten volts, six being the usual voltage for jump-sparks, which predominate in automobile engines. Somewhat higher voltage is required for gasoline-engine igniting by the make-and-break system.

Voltage means simply pressure; *ampere-hours* means the capacity. For greater mileage, do not increase the voltage, but provide greater battery capacity—that is, greater ampere-hours.

The usual life of a battery of twenty ampere-hours capacity is 300 miles in a four-cylinder engine, 500 miles with a two-cylinder engine, and 800 miles with a single-cylinder engine.

Noise. In a gasoline car, there is bound to be some sound present, owing to the explosions of the engine and the working of the gears or chains. The latter should never be more than a hum, and at that it should not be a loud or annoying hum. Correctly cut

Purchase full membership to immediately unlock this page

DELVE INTO FANTASY, MAGIC, MYTHOLOGY & FOLKLORE

Forgotten Books' Full Membership gives access to 797,885 ancient and modern, fiction and non-fiction books.

Continue

*Fair usage policy applies

If the engine is at rest, however, and the spark is in a retarded position, the tendency will be to drive the engine backward; and even an experienced hand at cranking is likely not to be quick enough to avoid a sprained wrist, a dislocated arm, or a blow in the face from the crank. In turning the crank, force of pressure should be exerted only in pulling up the handle, and not in pushing it down. In this way, should the handle violently pull itself away, it can do no harm as it will simply tend to straighten out the fingers that are engaged in the upward pull.

Smoke. The causes of smoke and odor are too much oil or too much gasoline. Where a crank-case splash is used for oiling, the best way to prevent an excess of oil getting into the cylinder is by having one or more extra rings on the piston below the lower ring, this extra ring scraping off the surplus oil. The color of smoke due to oil is blue. Corrosion will also cause smoke, and should be remedied as indicated under the heading "Corrosion," by cleaning with kerosene.

Smoke due to too much gasoline in the mixture, is black and of strong odor.

Skidding. Skidding or sliding of motor-cars on wet, oily streets is sometimes very annoying to a novice or beginner in the new field of motoring. And while the results are sometimes very serious where the streets are crowded and traffic is heavy, it bothers the experienced driver but little, since he has studied his car as a sailor learns his ship at sea, and the moment it occurs he knows the best way to favor his car under this unpleasant situation.

Skidding, as we all know, is due chiefly to poor traction. If we had dry streets all months in the year, this unpleasant experience would hardly befall us; but until the wheel is brought into use that has the same resilience as rubber and has the same good traction in either dry or wet weather, it will be up to the driver as to the best way to avoid the skidding of his car in bad weather.

As we drive down an asphalt boulevard on a wet day and see a car up against the curbing, with a broken wheel, the first thing that occurs to us to say is: "Well, that fellow had to stop a little sooner than he expected." The chances are that the driver of the car was running faster than one should on a wet day; and at the moment when he decided that he had better bring his car to a stop, he applied the

emergency brake, locking the rear wheels, whereupon the weight of the car carried him from the graded part of the street into the curb.

Two years ago, such accidents were of more frequent occurrence than they are to-day. This is chiefly due to the fact that the up-to-date motor-car is being equipped with what we term an equalizing wire or bar whereby the two rear brakes will get the same tension, and a car will slide straight if the street or road is level. In the case of the old brake, where it was necessary to jack up the rear wheels of the car, and adjust brakes to what was deemed about right, nine out of ten times one brake was tighter than the other. Such a condition of the brakes will skid a car very quickly, for the car will always skid to the side on which the brake is tightest, and will almost always turn completely around.

The conservative driver on a wet, muddy day is constantly figuring, so to say, one minute "ahead of the game"—which is a long time in motoring. He is thinking what the driver of the car ahead is going to do, and whether he is going to cut him off at the corner. Or it may be that he sees a rig approaching on a cross-street. Will it be past by the time he reaches the corner? If not, he will check the speed of his car so that the rig will have gone by, leaving the roadway clear. A good policy on a wet day is to keep one's car as near the center of the street as possible, still favoring with the right of way, as much as possible, the driver coming in the opposite direction; and to avoid as far as possible any use of the brakes.

It is bad policy to use the brakes on a wet clay hill, for this is the quickest way possible to put a car in the ditch. Throttle the motor down low; if necessary, put in the low gear, and let the weight of the car drag on the motor. On the road, should the car start skidding the rear wheels into the ditch, just drop back a speed lower on the shifting lever, keep the motor running about the same number of revolutions, and cramp the front wheels quickly in the opposite direction. The car may slew to the other side; if so, cramp the front wheels again in the same manner. This may take a little practice on the part of a beginner, but will keep the car in the road. Should the front wheels act as if beyond control, on account of skidding, just draw the clutch, or, in other words, disengage the engine so that there will be no power transmitted to the rear axle. Keep

out the clutch until control of the front wheels is regained—which will be before long. Never be afraid of the car, and learn to favor the engine under all conditions.

Skidding, on the other hand, has done a great deal for road racing during the past few years, in negotiating bad turns in getting a high speed average. Bad turns on a course are easily made by the practiced professional road-driver at a high rate of speed, through the knack of skidding. M. Laucia, for example—one of the greatest drivers in the world—will run onto a right-angled corner at the rate of 65 to 75 miles per hour; and at a certain spot which he has marked in his mind (as he does every bad point in a course), he will ground his magnets by means of a ground wire and button connected to his steering wheel (this taking place about 100 yards from the turn); will then draw the clutch; and, about 25 feet from the corner, will apply his positive brake (which locks his rear wheels) and turn his front wheels to a slight angle in the direction he wishes to go—all in a second. You will see an awful cloud of dust arising; the weight of his huge piece of racing machinery has skidded; his rear wheels have swung around just a quarter; he then drops back to a lower gear on his speed sector, lets in his clutch, and is off like a shot from a cannon. In the 1907 Vanderbilt race, Laucia had his rear brakes so arranged that he could lock either wheel, or both. This helped him wonderfully in making bad turns, as he used his steering wheel only to steady his car, while his clutch and new brake arrangement (his original) skidded his car at the corners.

Going down Steep Hills. In going down a long, steep hill, the wear on the brakes would be very great if they were used entirely to hold the car down to a safe speed. In going down hill, one can usually depend on the braking effect of running the engine without power, thus having the gear drive the engine and opposing a load to the downward pull of gravity. By throwing the engine into gear, you get a bigger brake effect. The only danger is the possibility of getting the engine beyond its proper speed. A good many people do not believe in pulling the clutch when operating the brake. If the brake does not disengage the clutch, it would put a strain on the engine if the brake were applied while the engine was in gear. Some makers are now arranging details so that the regular brake operates the clutch, and the second or emergency brake does not.

Purchase full membership to immediately unlock this page

HISTORY

Tens of thousands of important historical sources, many previously unobtainable, are now available for the first time with a Forgotten Books Full Membership.

Unlimited Access
$8.99/month

Continue

*Fair usage policy applies

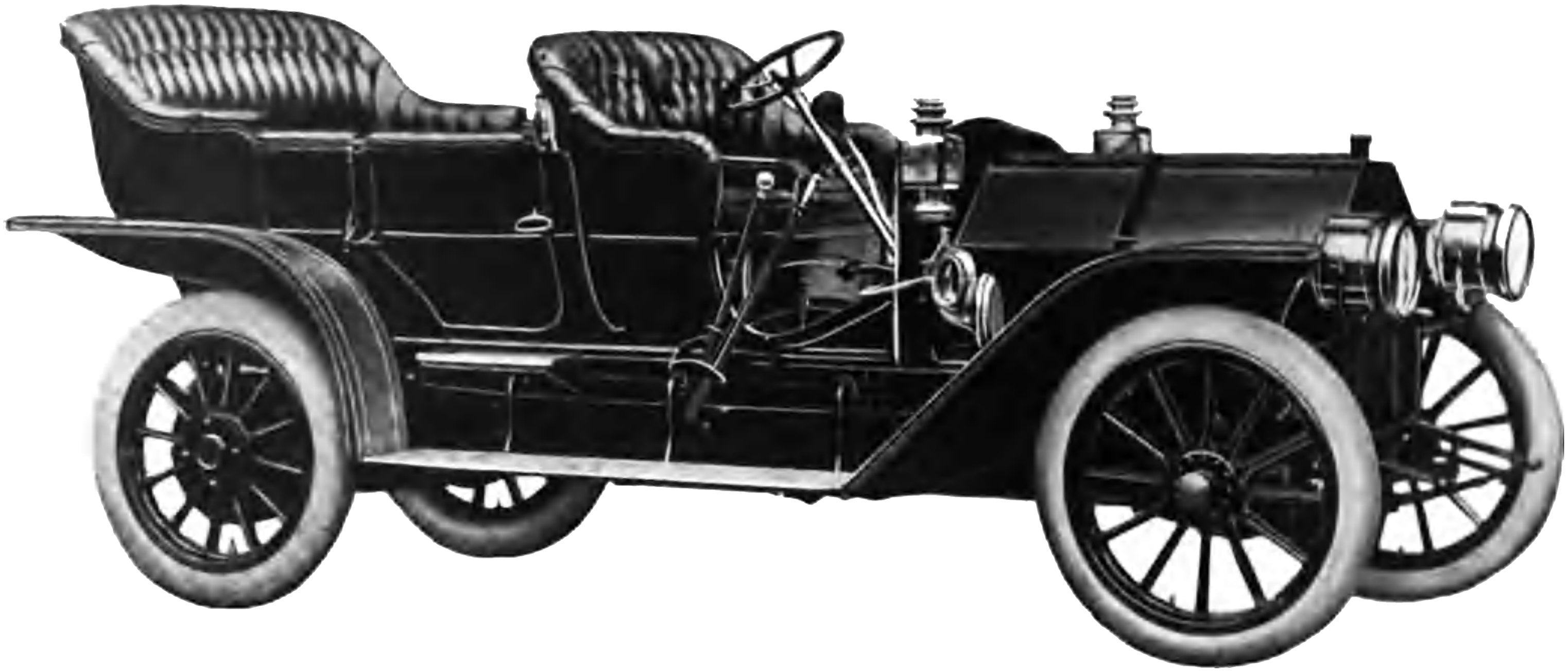

TOURING CAR, MODEL 50.
Nordyke & Marmon Company, Indianapolis, Ind.

If the hill is not long or steep enough to demand the use of the engine compression as a brake, one can use the regular and emergency brakes alternately, thus removing the strain and giving each an opportunity to cool off.

When using the engine compression as a brake, one should not run far without shutting off the gasoline. It is of course necessary to throw the current and gasoline on before the end of the hill is reached, so as to avoid the necessity of getting out and cranking to start.

On the Road. After making a run of a certain number of miles the car should be subjected to the following inspection:

Examine the radiator to see that it is not unduly hot, and that it contains sufficient supply of water; examine oil-pump box to see that it is well supplied with oil; inspect gasoline tank to see that you have sufficient gasoline to reach your destination; note whether oil is leaking from your engine casing, gear casing, or rear-axle housing; see that no gasoline is leaking from your machine. If a gasoline leak occurs, have it fixed promptly; do not permit a leak from this source an instant longer than may be necessary, as it may result in a fire, which in turn may cause the destruction of your car and endanger the lives of its occupants. Examine rear-axle bearings, and see that they are not becoming heated. The rear-axle housing will be slightly warm, especially if you have been running on high gear. This will do no harm, as it is simply due to the "churning" of the oil. Feel front hubs to see that they are not heating. Examine tires carefully, and note their condition.

The chances are that nothing whatever will be found wrong with a machine, if thoroughly tested before starting.

Cleaning and Washing. It is very essential to clean the motor regularly, and to keep all the bright parts well polished. Touring cars cover so much more ground than horse-drawn vehicles that they are apt to accumulate a great deal more mud and dirt, and the entire car therefore should be thoroughly cleaned and washed frequently. It is important to use a slow stream from the stable hose, so that the mud will be soaked off and the finish uninjured, and no water spattered in through the bonnet. The body should always be dried with chamois skin; and if, after washing, it can be run outdoors in the sunshine, the finish will tend to harden and brighten.

CARE OF TIRES

Probably the chief cause of the wearing-out of tires is that they are not kept sufficiently inflated. It is not sufficient that the tire shows no depression whatever when standing on a hard surface under

full load, but the tire should be inflated to the full standard pressure corresponding to its diameter. The tire tube, properly inflated, is somewhat longer in its vertical than in its horizontal diameter, as shown in *A*, Fig. 128. A tire insufficiently inflated as shown in *B*,

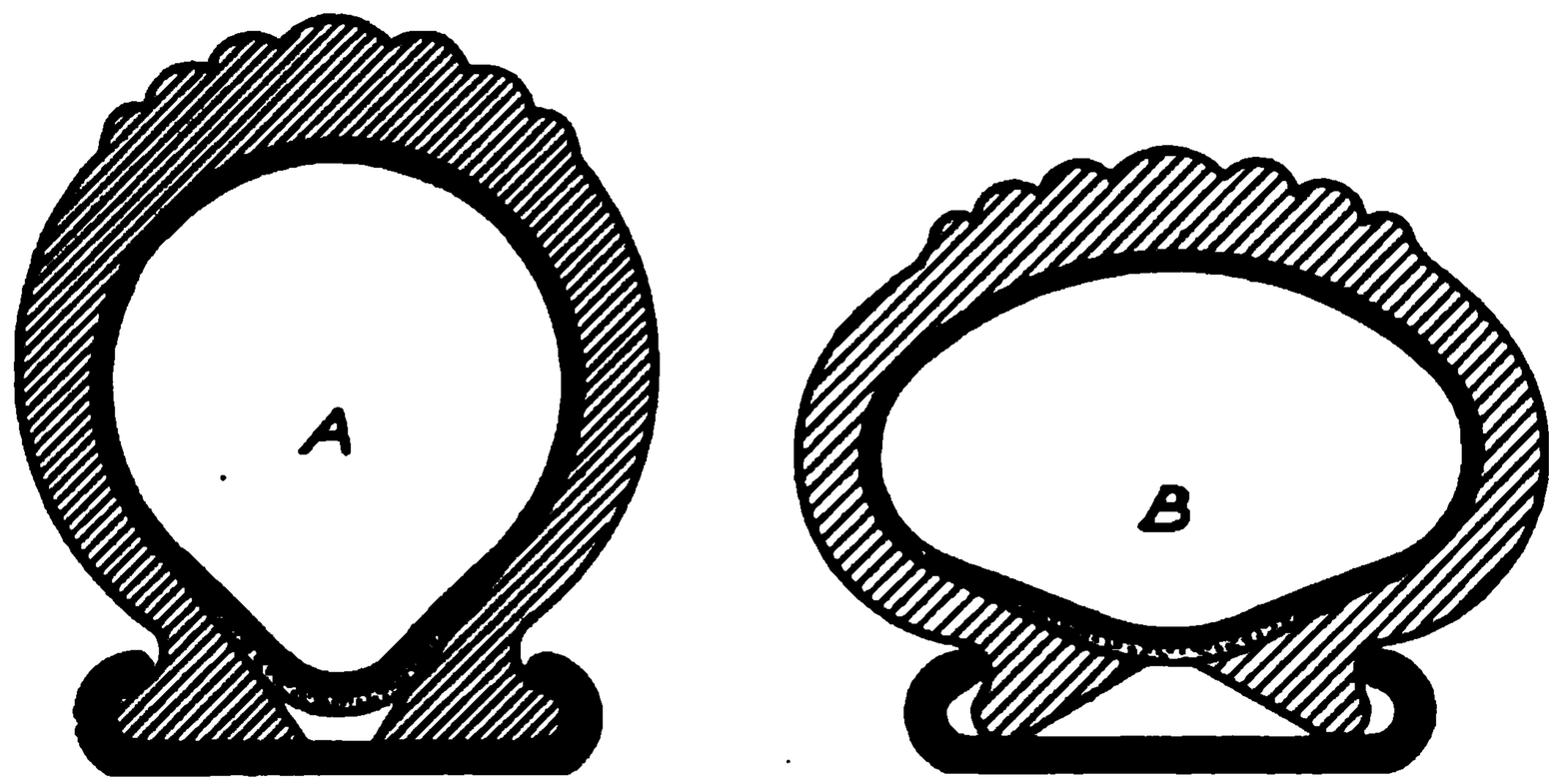

Fig. 128. Tire Properly Inflated (*A*) and Improperly Inflated (*B*).

Fig. 128, is subjected to the inner pressure of the rim. The following is a list of pressures to which tires of various diameters should be inflated:

TIRE INFLATION

Diameter of Tire	Pressure
2½ inches	45 pounds
3 "	50 "
3½ "	60 "
4	70
4½	80
5	90

Every automobile owner should have a tire pressure-gauge; and this should be attached to the valve, not to the pump. The pointer on the gauge oscillates with each stroke of the pump; the pressure in the tire, however, is indicated by the pointer when it is at rest. In using a pump, take long strokes, for in pumping short strokes much of the pressure accumulated in the pump is not transferred to the tire. If a car is in daily use, it can be left standing on the tires; but they should be left inflated. If the car is to remain for some weeks without being used, it should be jacked up and the tires deflated to remove tension. They should be kept free from dampness, for that is very injurious. Corners must be turned at slow speed. Do not drive in street-car tracks, as this rapidly wears out tires. Apply brakes

Purchase full membership to immediately unlock this page

DELVE INTO FANTASY, MAGIC, MYTHOLOGY & FOLKLORE

Forgotten Books' Full Membership gives access to 797,885 ancient and modern, fiction and non-fiction books.

Continue

*Fair usage policy applies

To Remove Tire from Rim. The following instructions are to a considerable extent those given by the Gormully & Jeffery (G. & J.) Tire Company, but with slight modifications apply to any make:

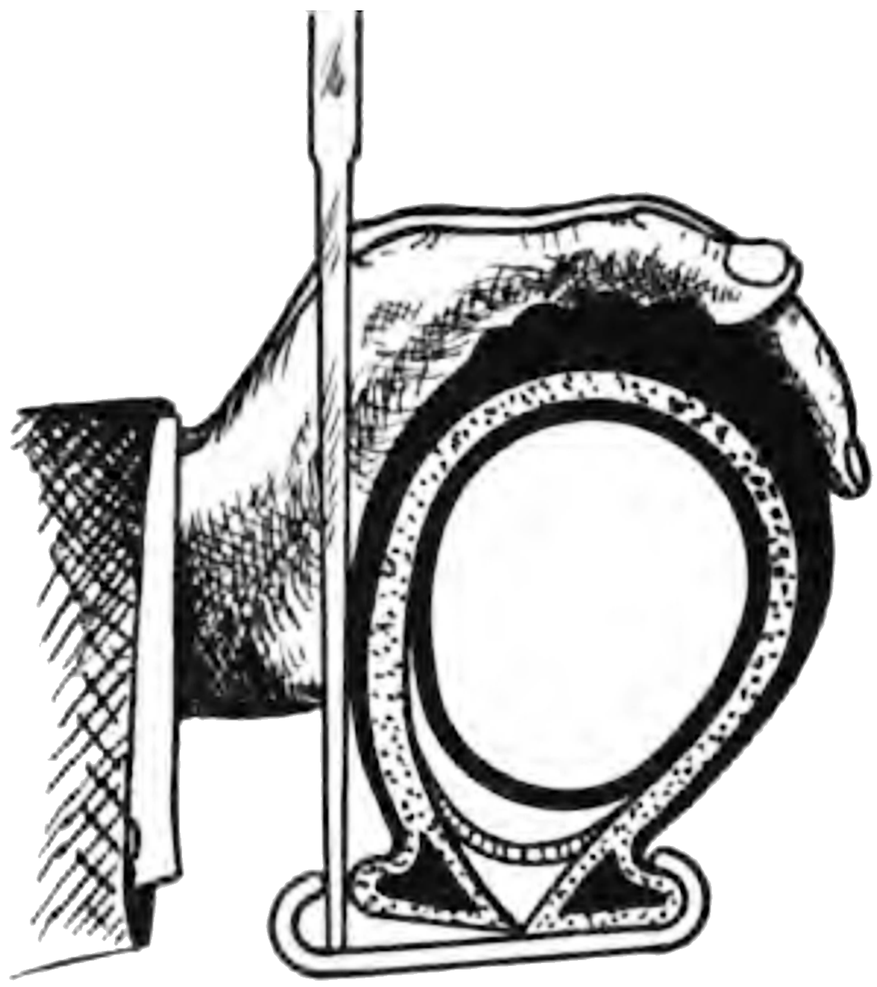

Fig. 130.

Fig. 131.

Use of Small Tool in Removing Tire from Rim.

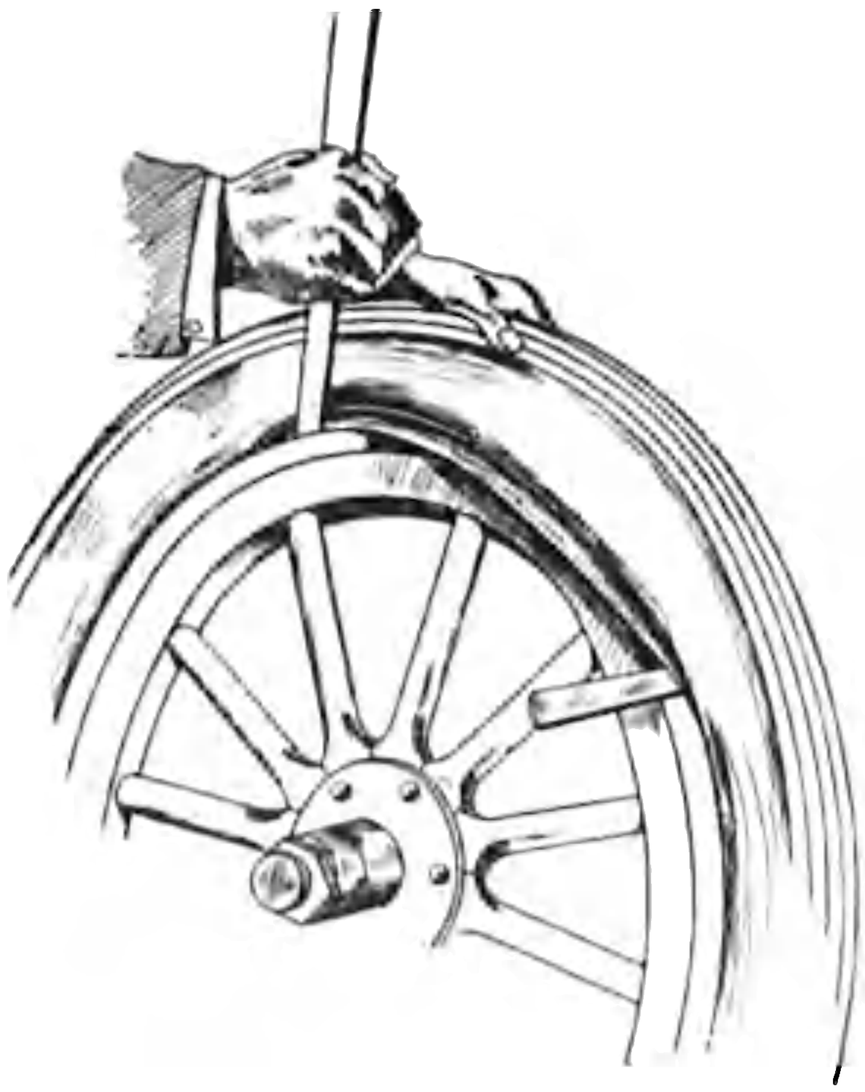

Fig. 132. Removing a Tire.

Fig. 133. Partially Removing Inner Tube.

With large tire tool, as shown in Fig. 129, push the end of the tire free from the rim. Pry up the edge of the tire case with small, straight tool (see Fig. 130). Push tool straight in underneath the tire (see Fig. 131). Leaving the small tool underneath the edge of the

case, pull towards yourself (see Fig. 132). When a foot or more of the edge of the case is free from the rim, pry it over the edge of the rim; then, after about one-third of the case is released, the entire tire can be pushed off with the hands.

Finding a Puncture. If a puncture is located before removing the tube, it will be unnecessary to remove the tube from the case. The tube can be drawn down as indicated in Fig. 133. If puncture has not been located, remove tube from the case, inflate it, and pass it by your face, when you will likely feel or hear the escaping air and thus be able to locate the point of puncture.

Fig. 134. Returning Tire to Rim.

To Repair a Puncture. Sandpaper the surface of the tube at point to be repaired. Sandpaper also the patch piece. Apply tire cement to both tube and patch, and allow each to dry separately. When dry, apply a second coat of tire cement to both tube and patch. When the second coats of cement are about dry, press the patch down firmly. The patch will hold better if given time to get almost dry before pressing it down. If you attempt to hurry the repair, there is danger of the patch coming loose. Before putting the tube into the case, investigate the case, and see that no needle, tack, or nail is left remaining in it.

Returning Tire to the Rim. Slightly inflate inner tube, and push it back into the case as shown in Fig. 133. Then take the case with inner tube in it, and push valve-stem through valve-hole in rim, as shown in Fig. 134. Fig. 135 shows how the inner edge of the case is sprung back into place with the large tire tool. Fig. 136 shows how the second or outer edge of the case is pushed into place. Screw down the valve-nut so as to hold down the tire at this point. Place a small, flat tool at each side of the valve underneath the edge, to prevent the edge from slipping out; and with the large tire tool, pull towards you.

Before inflating, look around the tire on each side to see that the edges are properly seated.

CARE AND OPERATION OF ELECTRIC VEHICLES

The Volt-Ammeter. The motive power of the electric car is the *storage battery*. The amount of power available is registered by the *volt-ammeter*, Fig. 137. This instrument, as commonly used on electric cars, consists of a voltmeter and an ammeter mounted on a single base and enclosed in a case, with their graduated scales adjoining each other. The purpose of the volt-ammeter is to keep the driver posted as to how much electric power he has available.

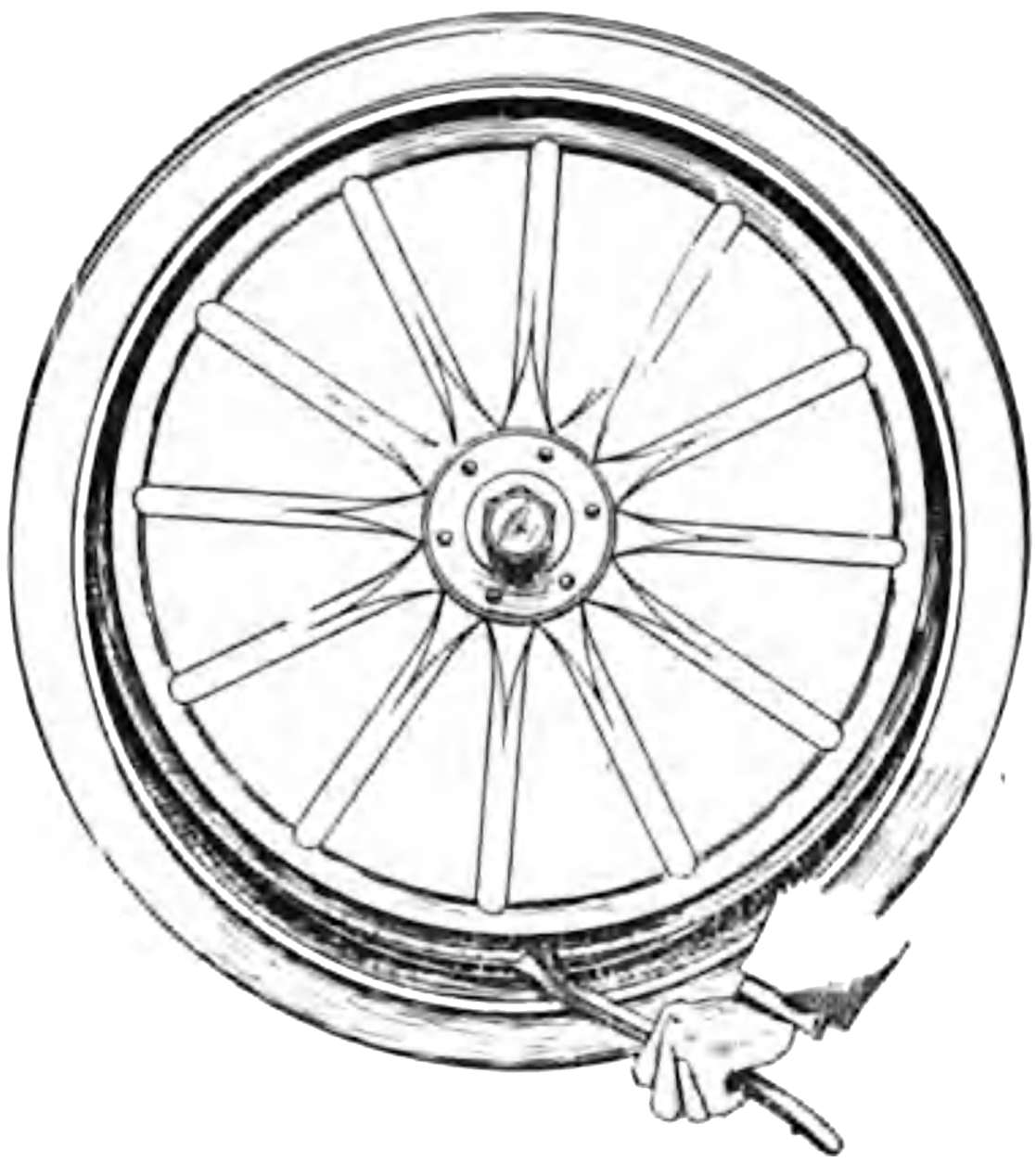

Fig. 135.

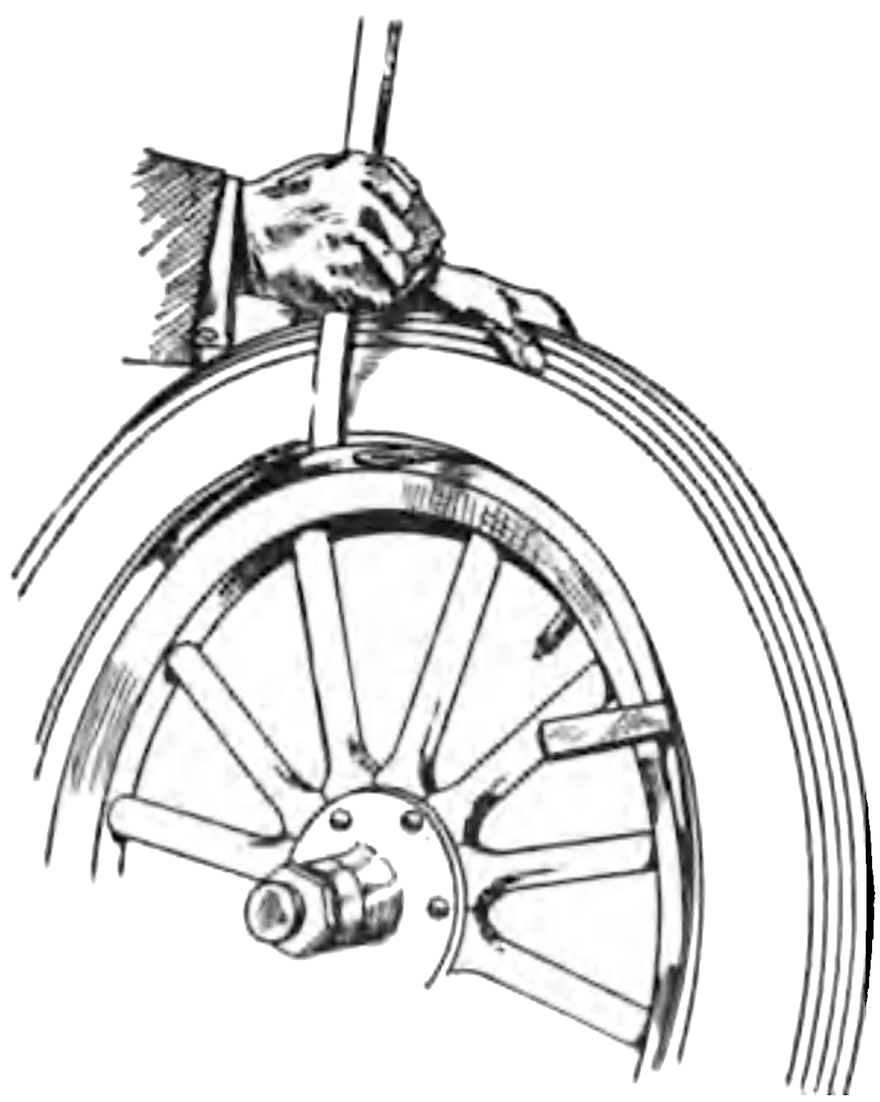

Fig. 136.
Final Adjustments in Returning Tire to Rim.

Before starting out with an electric vehicle, the driver should know how to read the meter correctly, and he should keep in mind the amount of electric power at his command.

When the battery is fully charged, and after the charging current has been cut off, this meter should show 2.2 volts per cell. Thus a 24-cell battery should show about 53 volts; a 30-cell battery,

Purchase full membership to immediately unlock this page

HISTORY

Tens of thousands of important historical sources, many previously unobtainable, are now available for the first time with a Forgotten Books Full Membership.

Unlimited Access
$8.99/month

Continue

*Fair usage policy applies

ment, one can observe closer voltage reading than when the total voltage only is indicated. The point *B*, indicated by the small arrow, is at a point indicateng 2.65 volts per cell, which indicates the highest point at which a 12-cell battery should be charged, when ammeter needle is at *A* on the ampere side of the instrument. The point *D* shows the point at which the battery will be discharged when the ampere needle is at *C*.

Controller. In starting a car, the first thing to do is to see that the controller handle is at the "Off" position. This is the first step, and should be noted before inserting the key which closes the circuit. It might happen that the controller handle had been moved to some running notch by some curious or mischievous person. In this event the car would start as soon as the key was inserted, and might cause an accident.

Pulling out the key also affords a means of stopping the car in case the controller handle should stick, although such an occurrence is rare.

In starting the car, do not advance the controller handle beyond the first notch. As soon as the vehicle has gained a little momentum, the handle may be advanced another notch. The handle should never be allowed to remain between notches, as this is likely to cause arcing in the controller.

In stopping or reversing, the lever should be thrown quickly back to the "off" position. To reverse, the reverse switch is thrown "On," and the controller handle advanced to the first notch. The beginner will find it a little difficult at first to steer on the reverse, and should have his foot on the brake and be ready to throw the controller handle to the "Off" position. Unless an unusual emergency demands it, never reverse a vehicle while it is moving forward. And under no circumstances change again while it is moving backward.

Driving an Electric Vehicle. First attempts at steering should not be made on a crowded street or at full speed. Turn the corners at slow speed, especially if the streets are wet and slippery. Do not grip steering or controlling levers tightly. A firm but relaxed hold is the correct one. The bell is operated by a push-button, sometimes located on the floor and operated by the foot, and sometimes in the handle of the steering lever.

The bell should be rung lightly when turning from one street

to another, when approaching a crossing, or when obliged to stop suddenly in a crowded street.

In great emergencies a motor may be reversed at first speed; but this method of stopping should not be used until all other means fail. Brakes should be used as rarely as possible, and current should be cut off before applying them. A good driver will always be economical with his power, and with care will be able to get from eight to twelve miles more with one charge of the battery than one who does not save at every opportunity.

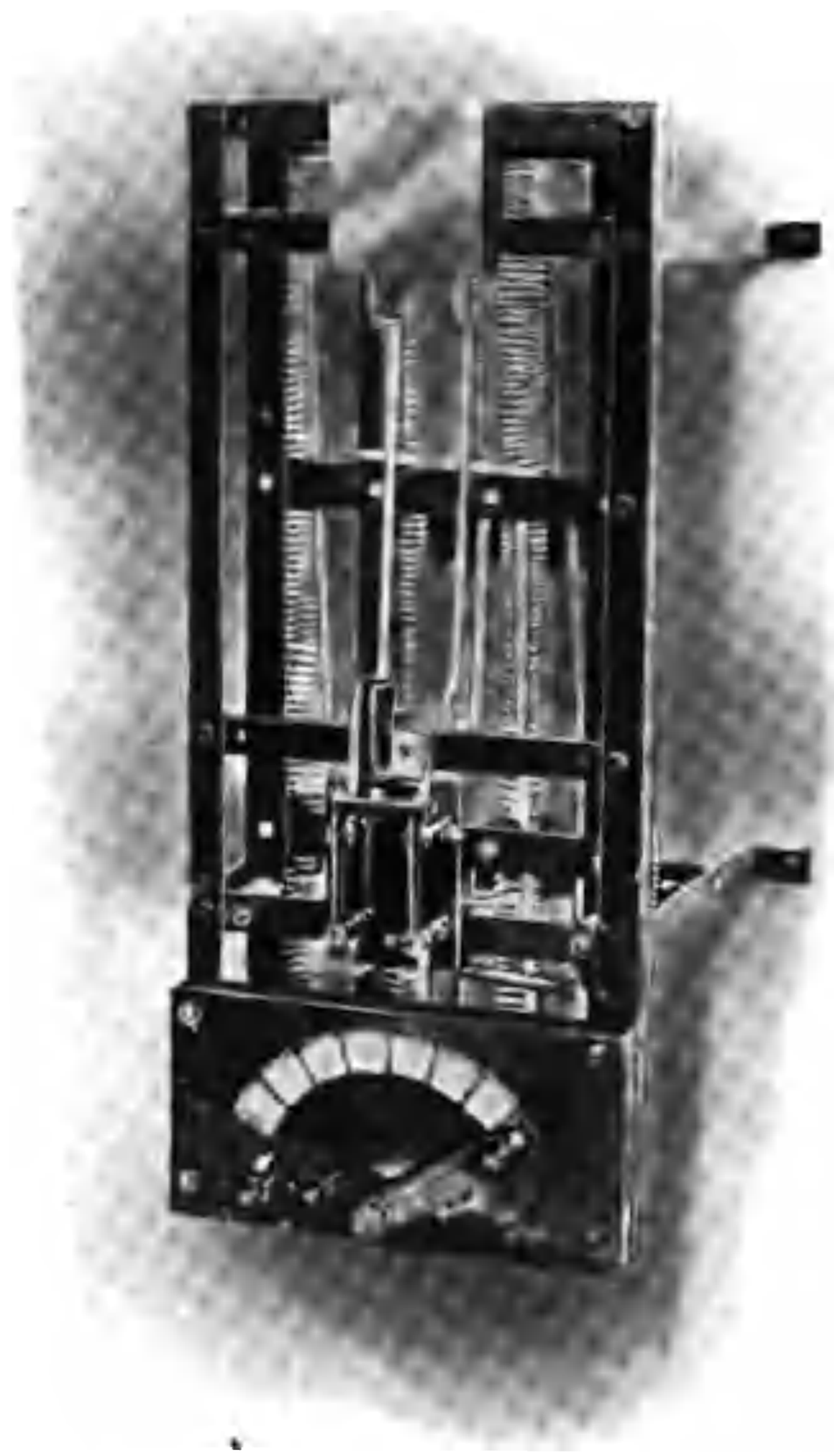

Fig. 139. Rheostat for Reducing Line Voltage of 220 or 110 Volts to Proper Voltage for Charging Batteries.
The Waverley Company, Indianapolis, Ind.

Such little economies as turning on the motor light only when necessary, coasting whenever practicable, and using a second speed instead of the high speed, will all help in prolonging the amount of run to be had from one charge.

Care of Motor. The commutator should be kept clean, using an oily felt. If the felt will not clean, sandpaper may be used, but must always be followed by rubbing with the felt. Great care must be exercised not to leave particles of sand between the brush and the holder, as this will cause charring of the commutator. Brushes should be thoroughly cleaned, and no dirt or sand allowed to get between the brush and the holder, which prevents free movement of the brush, causing sparking and blackening. Tension on the brushes must be sufficient to give good contact with the commutator. In most automobile motors, brush-holders are stationary, being

placed at the neutral points; and their position should not be changed.

Charging Stations. Storage batteries for electric automobiles must be charged with a direct current at a rate varying from 6 to 40 amperes. The voltage usually required varies from 65 to 110 volts, according to the number of cells in the battery. A town or locality supplying a 110-volt direct current affords the best facilities for charg-

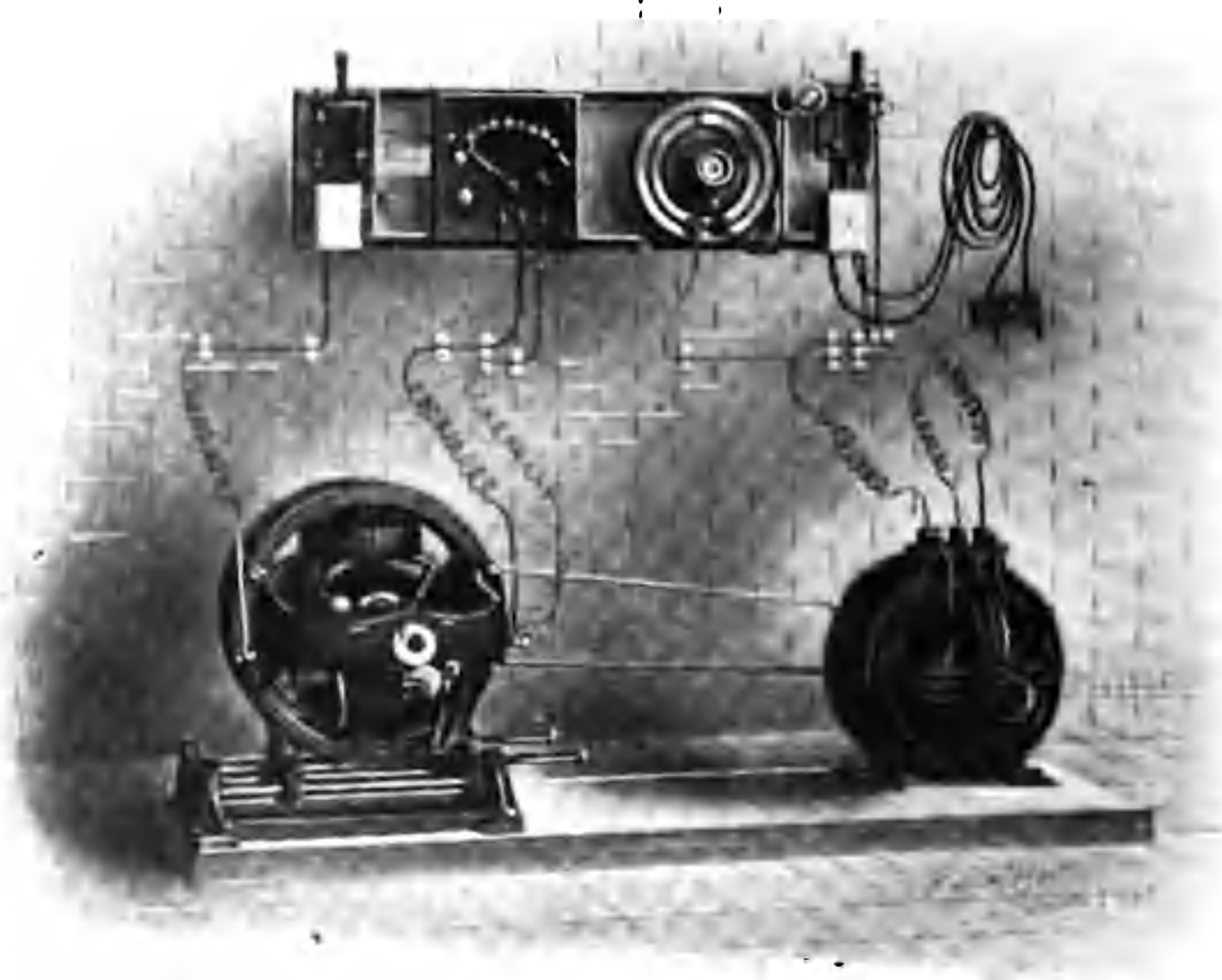

Fig. 140. A 2½-Horse-Power Motor-Generator Set for Reducing 500-Volt Line Current to Proper Voltage for Charging Batteries.
The Waverley Company, Indianapolis, Ind.

ing batteries. Under such conditions the only equipment necessary for charging is a rheostat introducing resistance to cut down the voltage from 110 volts to the required point (see Fig. 139). When 220-volt direct current is used, voltage may be reduced in this same manner; but with 500-volt or with alternating current, a motor-generator set is required for charging (see Figs. 140 and 141).

Where access can be had to a factory where it is practicable to drive from a shaft a small 2-horse-power generator, this arrangement will be found more economical than any other. The gasoline

Purchase full membership to immediately unlock this page

DELVE INTO FANTASY, MAGIC, MYTHOLOGY & FOLKLORE

Forgotten Books' Full Membership gives access to 797,885 ancient and modern, fiction and non-fiction books.

Continue

*Fair usage policy applies

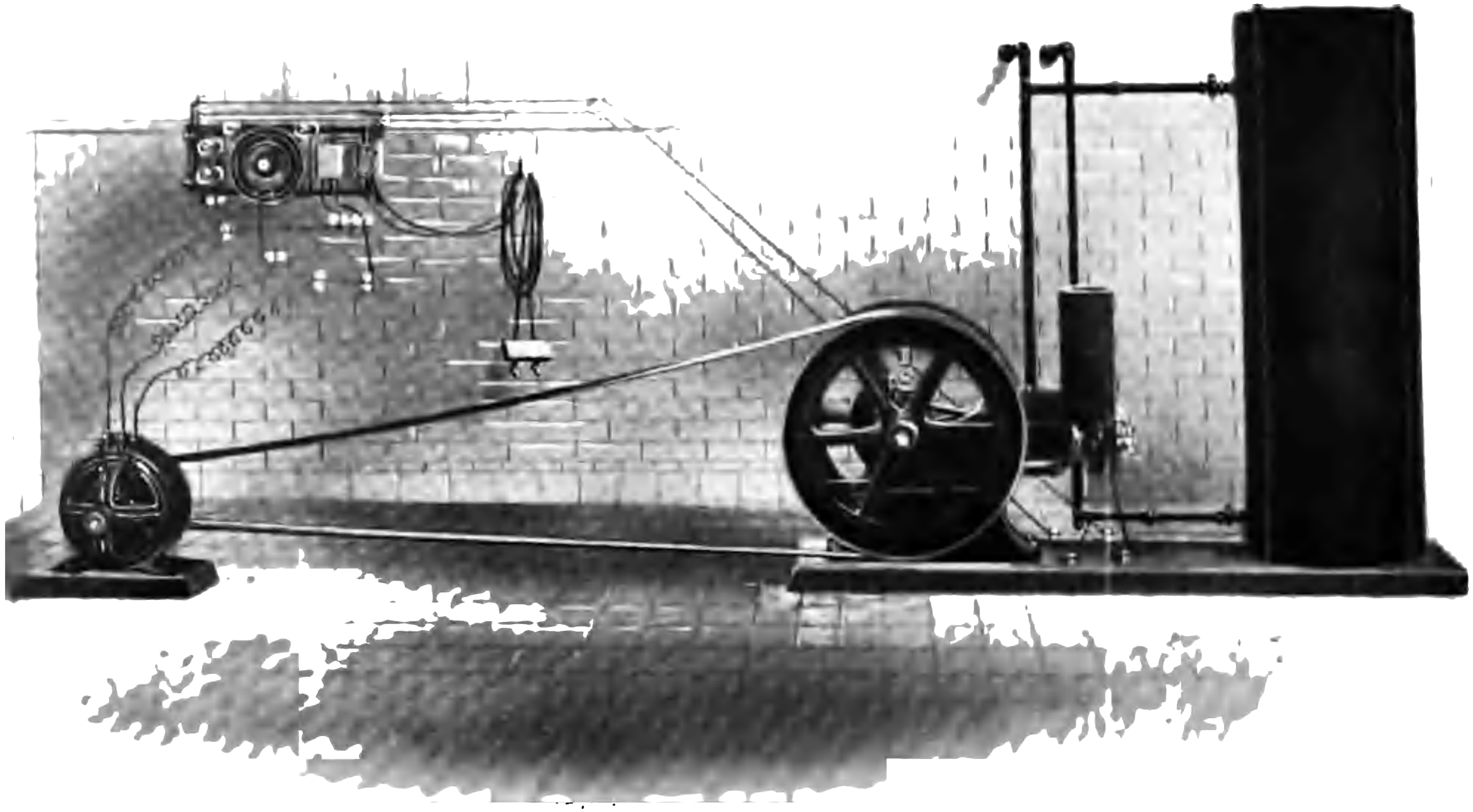

Fig. 142. Charging Generator Driven by 3-Horse-Power Gas or Gasoline Engine.
The Waverley Company, Indianapolis, Ind.

Storage Batteries for Electric Vehicles. Storage batteries usually suffer more from neglect than from any other cause, the reason being that they do not give any decidedly pronounced evidence of such neglect until it has been a matter of long standing.

The storage battery, strictly speaking, is not a device for storing electricity, but is a device in which the energy of an electric current provided from some outside source is caused to produce electrolytic decomposition to such an extent as to produce independently an electric current after the removal of the electrolyzing current. The charging current produces an electrolytic decomposition of the liquid between the plates. This liquid is usually a mixture of chemically pure sulphuric acid with distilled water, mixed until the specific gravity, when the mixture is cold, is 1.28. The mixture should always be made by adding the acid to the water, and allowing the mixture to cool thoroughly. *Never prepare the mixture by adding water to acid.* Water must be distilled and free from iron or other metallic ingredients.

On the cessation of the charging current, and the connection of the charged plates by a conductor outside the liquid, a current is produced which flows through the liquid from the plates about which the positive radicals are accumulated to the plates about which the negative radicals are accumulated, or in the opposite direction to that taken by the charging current.

When this reversal or discharging action is thoroughly effected, the cells become inactive, and will furnish no further current until again charged by the passage of a current from some external source.

Charging Storage Batteries. Before beginning to charge a battery, remove the starting plug from the car, and see that the controller handle is in the "Off" position. After making sure that the knife-switch between rheostat and outside current is open, and the rheostat handle at its extreme left, insert the charging plug into the socket for its reception (this socket is usually under one side of the vehicle body). Then close the knife-switch; and by turning the rheostat handle to the right, adjust the current to the ampere rate indicated by the battery manufacturer. This rate—to be maintained usually for about eight hours—varies from 9 amperes in a 5-plate cell having plates $4\frac{3}{4}$ by $8\frac{5}{8}$ inches, up to 26 amperes in a 13-plate cell with plates of same dimensions.

The bell must not be rung, nor the lamps turned on, while the battery is charging, as the increased voltage may cause them to burn out.

The normal charging current as required by the battery should be maintained until the battery gases freely, and the voltage reads 2.5 to 2.6 volts per cell with charging circuit closed. When the voltage has reached 2.5 volts per cell with charging circuit closed, the charging current may be adjusted to one-half the normal charging rate, until the voltage rises to 2.6 volts per cell with charging circuit closed. It is well to charge occasionally at only one-half the normal charging rate, especially if the battery has been over-discharged.

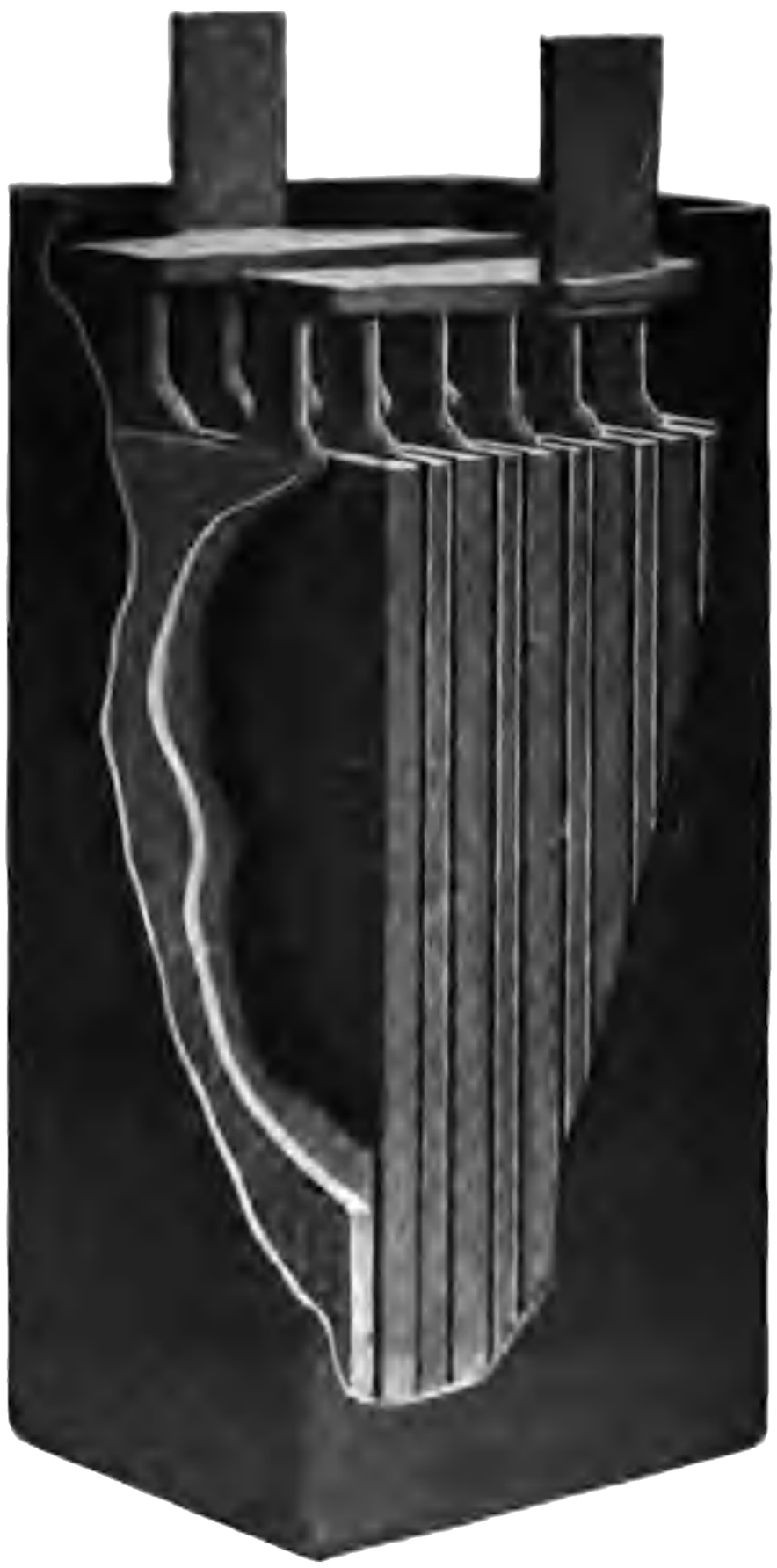

Fig. 143. Single Storage-Battery Cell. Universal Electric Storage Battery Company, Chicago, Ill.

Always remove the vent-plugs in the cells when charging the battery. Provide free circulation of air around the battery.

A battery *gases* as one approaches the end of the charge. The action is that of the electrolyte throwing off hydrogen.

Gasing is the symptom watched for in connection with the voltmeter reading when charging current is momentarily shut off, to indicate that the batteries are recharged. Care should be exercised, when gasing occurs, that no flame or spark is near the batteries, as hydrogen gas is inflammable.

Be sure the electrolytic fluid is always maintained above the tops of the plates. Examine the cells frequently with this point in mind.

It is not economical to charge at a higher rate than specified as normal by the battery maker. A long-continued charge at a low

Purchase full membership to immediately unlock this page

HISTORY

Tens of thousands of important historical sources, many previously unobtainable, are now available for the first time with a Forgotten Books Full Membership.

Unlimited Access
$8.99/month

Continue

*Fair usage policy applies

Care of Storage Batteries. The following is a list of cautions to be observed in connection with the care of storage batteries:

Keep the electrolyte at the proper height above the top of the plates.

A battery should not be excessively overcharged.

A battery should never stand completely discharged.

A battery should be kept free from deposits in the bottom of the jars.

The battery temperature should never exceed 100 degrees Fahrenheit.

Entirely discharge a battery, and then recharge it regularly once a month.

All battery connections must be kept clean and bright.

Any low cells in the battery must be located and repaired at once.

Battery compartments should be kept dry.

The electrolyte in the cells should stand from ¼ to ½ inch above the top of the plates. All loss by evaporation should be replaced with distilled water only. Once a month the gravity of the acid in each cell should be tested, and if found to be low, electrolyte instead of water should be used to replace the loss. No information concerning the gravity of the acid can be obtained unless the battery is fully charged.

A battery may be overcharged in two ways: *First*, by charging too frequently; *second*, by charging too long at a high rate. If a battery that will run a vehicle forty miles is charged after every short trip of five or ten miles, it is charged four or five times as often as it should be. A battery should not be charged until over 50 per cent of its capacity has been exhausted. If excessively overcharged, a rapid deterioration of the plates will result.

However, keep in mind the fact that a legitimate overcharge, so called, may be given from one to three hours at a low rate about once a month, and will prove beneficial to the batteries.

An electric vehicle should never stand with the battery completely discharged. If permitted to do so, the plates of the battery are likely to sulphate, which will tend to destroy their efficiency. A low gravity of the acid, and whitish appearance of the plates, will indicate this condition. The battery may be put in good condition again by a long, low charge. A badly sulphated cell may require a charge of as much as 60 hours at low ampere rate, before being brought to proper condition. Do not be alarmed, however, if the voltage runs up higher than usual during this process. As soon as the sulphate is broken down, the battery will assume its normal condition as to voltage and the gravity of the acid.

RENAULT CABRIOLET, A TYPICAL FRENCH MAKE
Renault Frères, Billancourt, France.

Purchase full membership to immediately unlock this page

DELVE INTO FANTASY, MAGIC, MYTHOLOGY & FOLKLORE

Forgotten Books' Full Membership gives access to 797,885 ancient and modern, fiction and non-fiction books.

Continue

*Fair usage policy applies

through which water is constantly forced by a pump. In a generator of this sort, water enters relatively cold at one end of the tube, and is delivered in the form of superheated steam under very high pressure at the other end.

A generator of this type has but a small reserve capacity, because of the small amount of water it can contain. It is therefore necessary to provide means for securing an abundant supply of steam when a sudden increase of power is demanded. This is usually accomplished by having the liquid fuel increased in unison with the operation of the circulating water pump, so that when more water is being pumped more fuel is being fed at the same time.

In the steam-engine-driven automobile, there is no need for any variable speed-gear, and the troublesome electric ignition is done away with. The engine itself has a wide range of power or flexibility, and this can be controlled in the simplest manner by merely admitting more or less steam to the cylinders. In addition to its flexibility, the steam car has the advantage of being practically noiseless in running and of being free from vibration, which latter is a feature of all internal-combustion engines. Its mechanism is also of the simplest type; hence it can be built lighter throughout, for the same power, than can a gasoline-driven car. Its limitations are such, however, that in some respects it cannot compete with the gasoline car. For instance, it cannot travel the same distance as a gasoline-driven car on the same amount of fuel, since the gasoline engine is far more efficient than the steam plant using gasoline as boiler fuel.

More attention is required to start and maintain the steam vehicle while running, than is demanded by the gasoline car.

The high-pressure boiler may be easily damaged through want of careful attention.

The main parts in a steam car are: Engine, boiler, and heater, pumps, transmission gear, water and gasoline supply-tanks, and controlling gear.

Steam cars usually do not have fly-wheels. With two double-acting cylinders. four impulses are obtained for every revolution of the crank-shaft, thus securing much more uniform turning effort than in a gasoline vehicle.

One of the most important features of mechanism in the steam

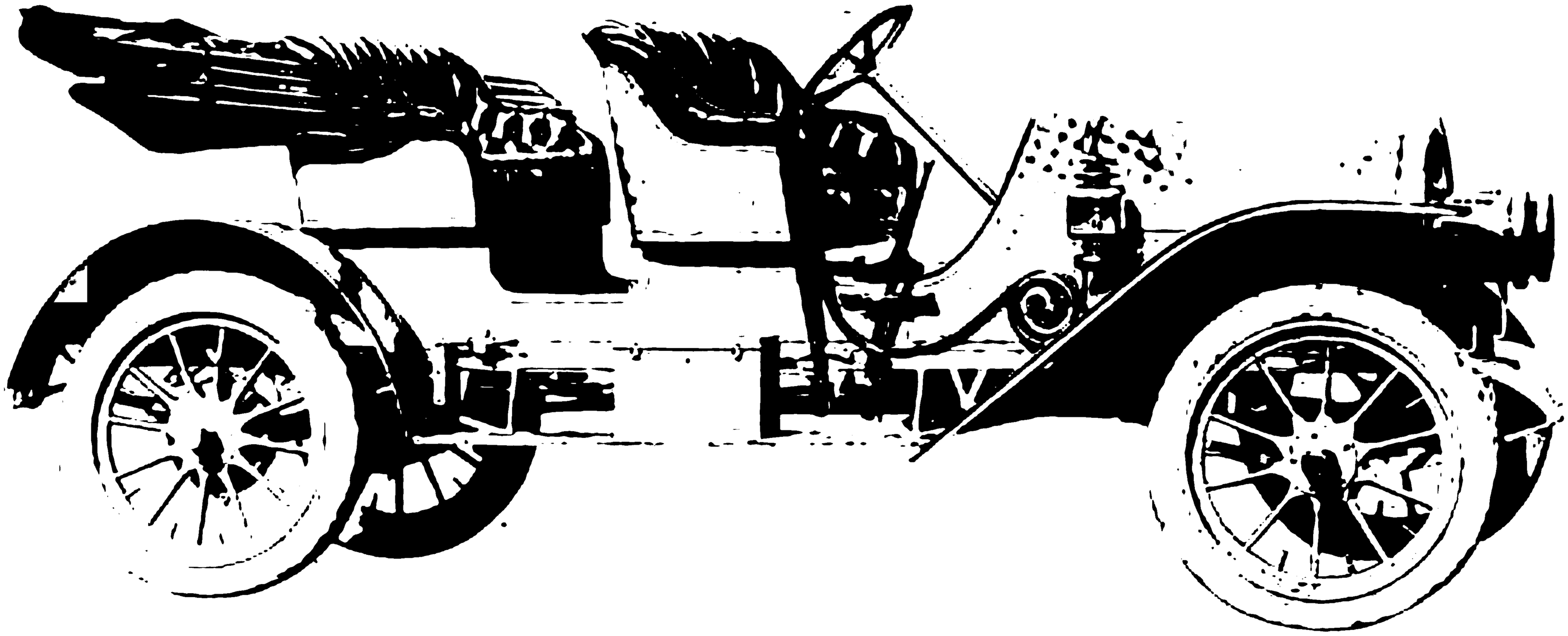

ADAMS REVOLVING-CYLINDER MOTOR-CAR, 1909 MODEL
The Adams Company, Dubuque, Iowa.

Copyright 1908, by Waldon Fawcett.

Purchase full membership to immediately unlock this page

HISTORY

Tens of thousands of important historical sources, many previously unobtainable, are now available for the first time with a Forgotten Books Full Membership.

Unlimited Access
$8.99/month

Continue

*Fair usage policy applies

closely, as steam pressure rises very quickly, and too much fire at the burner will cause excessive steam pressure and open the safety blow-off valve.

To start, it is only necessary to push the throttle-lever forward slightly at first; and in order to stop, to shut off the steam supply and apply the brake.

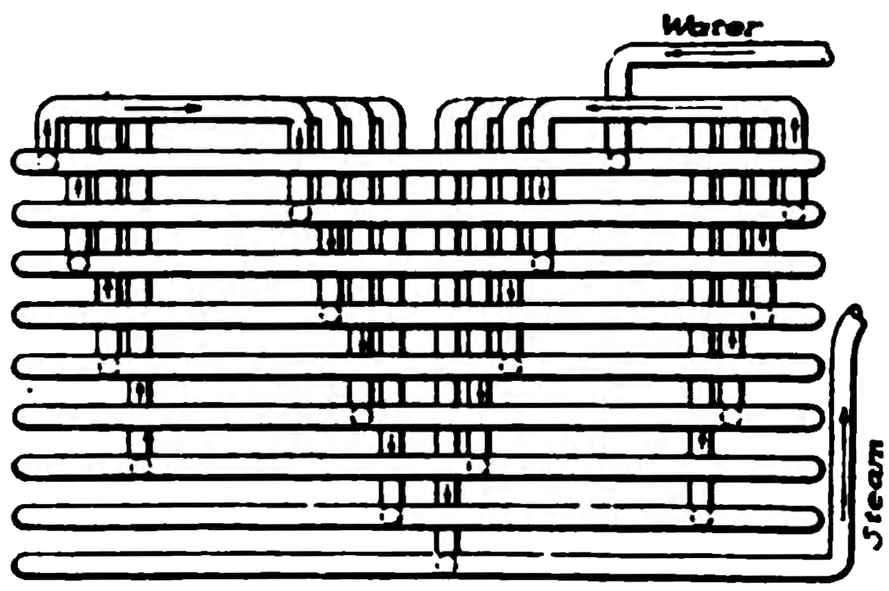

Fig. 146. Diagram Showing Circulation through Generator of White Steam Car.
The White Company, Cleveland, Ohio.

Since, in steam generators, scorching of boiler tubes results in serious damage, and even danger of explosion, the devices controlling water-supply to the boiler are features of construction requiring especial attention. In the White car, the water-supply is automatically regulated, obviating all need for the ordinary water-gauge, and removing all danger except from the grossest carelessness.

Injectors are but little used for feeding automobile boilers, because they would have to be made so small that they would be constantly clogged with dirt. Furthermore, an injector would fill

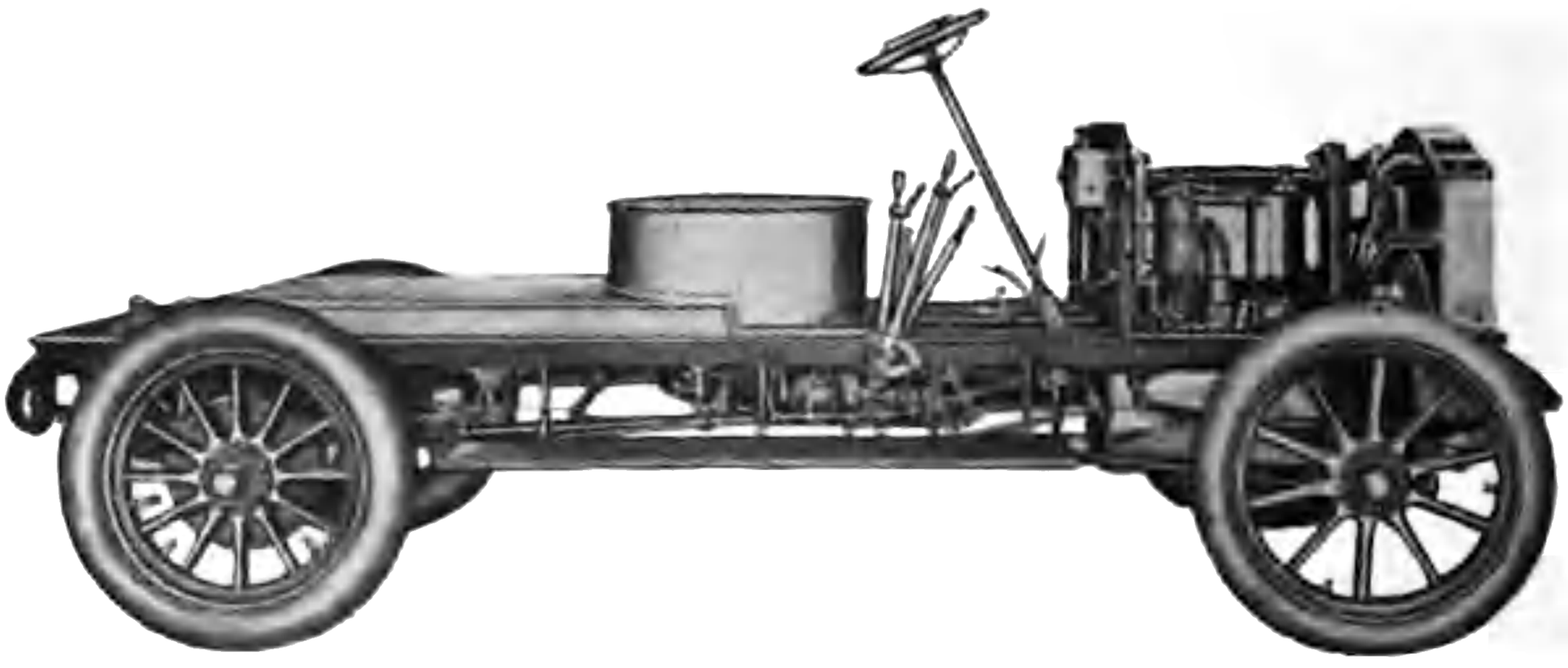

Fig. 147. Chassis of White Steamer, Showing Power Plant.
The White Company, Cleveland, Ohio.

the boiler too rapidly. Most usually plunger pumps are used, driven from the crosshead of the engine. Consequently, as long as the engine is in motion, water is being pumped into the boiler. When the water level is too high, the by-pass valve is opened, and the water is pumped over and back again to the tank. Automatic control of the by-pass is very desirable.

Pump troubles are usually due to loosened packings or clogged check-valves.

In inserting new packings, care must be taken not to pack the plunger too tight and cause breakage.

It is claimed as an advantage of the flash type of boilers, that,

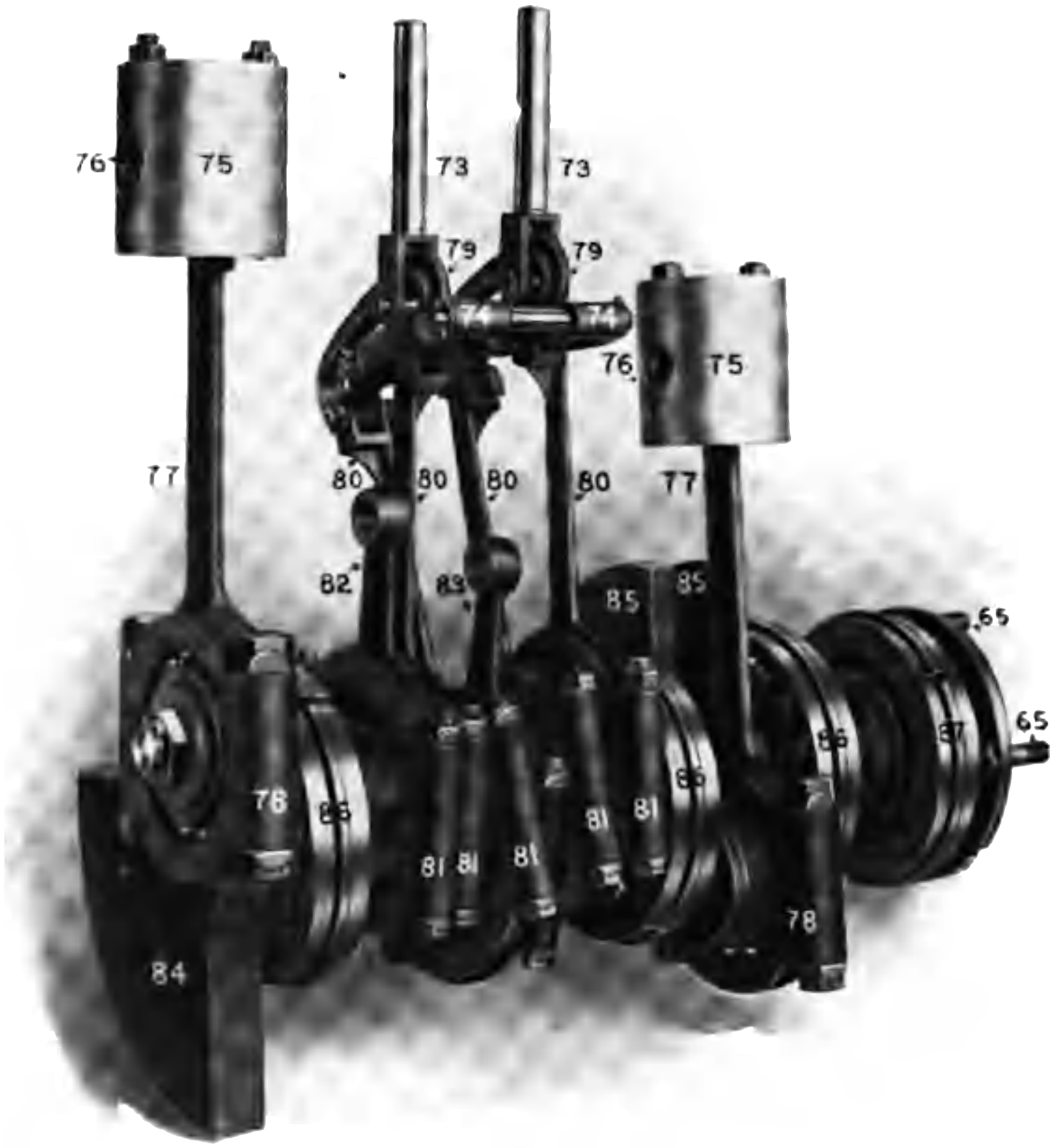

Fig. 147A. Crank-Shaft, Crank, Eccentrics, and Link Motion in White Steam Car. The White Company, Cleveland, Ohio.

65—Bolts Holding Universal Joint to Crank-Shaft; 73—Valve-Stem Bearings; 74—Link-Yoke; 75—Crosshead; 76—Crosshead Pins; 77—Connecting Rod; 78—Connecting-Rod Cap; 79—Valve Links; 80—Eccentric Rods; 81—Eccentric Rod Cap; 82—Air and Condenser Pump Eccentric Rod; 83—Water Pump Eccentric Rod; 84—Counterbalance Low Pressure; 85—Counterbalance High Pressure; 86—Main Bearing; 87—Main Thrust Bearing.

owing to the rapidity of steam generation, no incrustation is formed inside the tubes.

Fig. 145 shows the generator of the White steam car; and Fig. 146, the circulation system. Fig. 147 shows the chassis of this car. This car uses the Stephenson link valve-motion actuated by a set

of four eccentrics, instead of the cam-shaft valve-regulating system used in some other makes of steam cars. This is shown in Fig. 147A.

Water Regulation in Steam Cars. In the White steam car, when the engine is in operation, it operates the feed-water pumps. The *water-regulator* either by-passes all the water thrown by the pumps, which is the case when the pressure is above 550 lbs., or it allows all the water to flow toward the generator when the pressure is less than 550 lbs. The water supply is either all on or entirely shut off, the required variation being automatically brought about by the action of the water-regulator shown in Fig. 147 B.

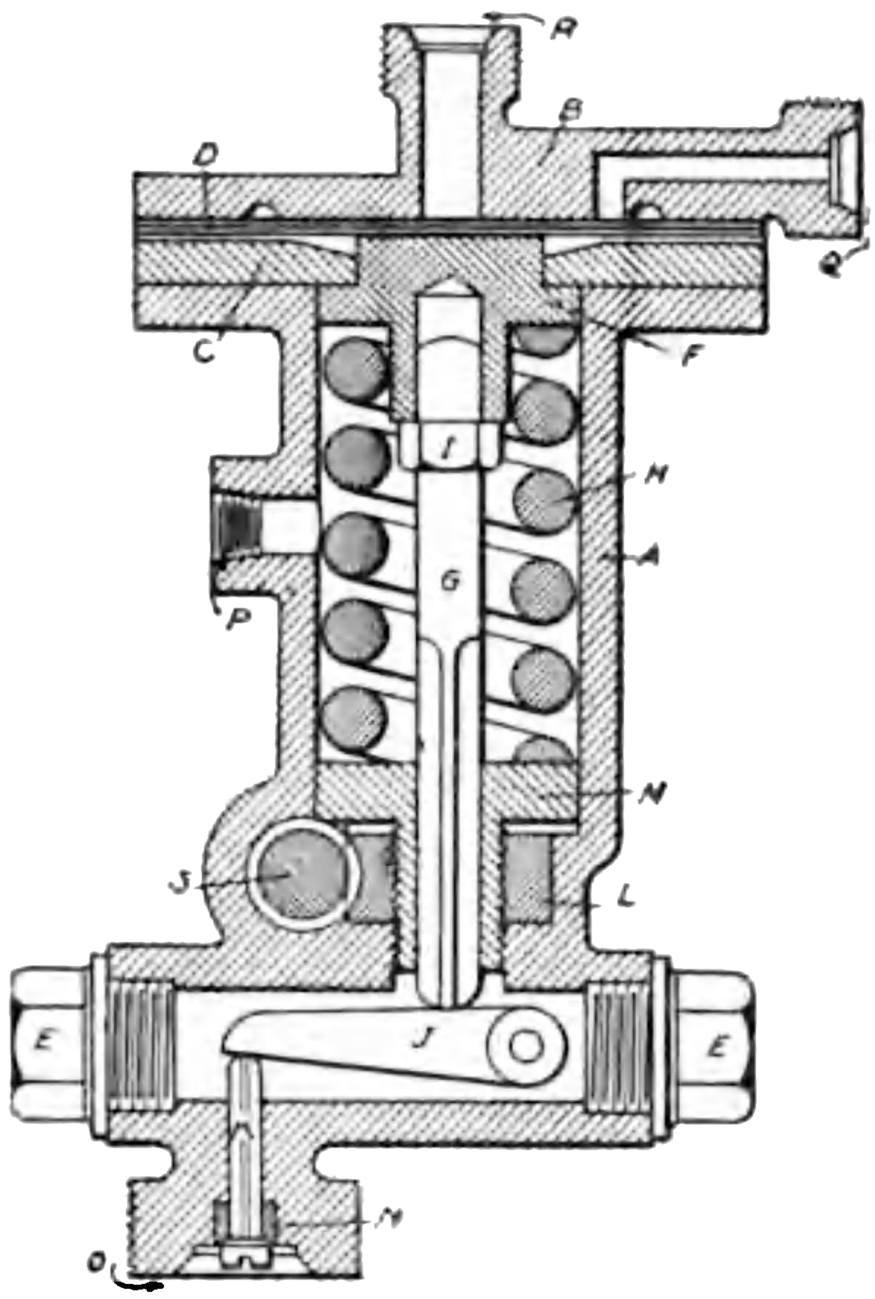

Fig. 147B. Water-Regulator of White Steam Car.
A—Main Casting; *B*—Water-Regulator Cover; *C*—Water-Regulator Washer; *D*—Four Diaphragms; *E*—Plug; *F*—Diaphragm Shifting Pad; *G*—Plunger; *H*—Spring; *I*—Lock Nut for Plunger Adjustment; *J*—Lever; *K*—Valve; *L*—Spring Adjusting Nut; *M*—Spring Adjusting Pad; *N*—Valve Seat; *O*—Connection to Pump Discharge; *P*—By-Pass; *Q*—Connection to Oiler and Steam Gauge; *R*—Steam Pressure Connection; *S*—Spring Adjusting Worm.

This water-regulator is a simple diaphragm valve actuated by the steam pressure in the generator. This valve is situated in the water-line, and acts either to permit all the water thrown by the two water pumps to be returned to the tank, or to permit none of it to be returned, the valve being open or closed, depending on the steam pressure. The steam pressure of the steam entering at the passage in the upper center of the regulator, presses down against the four diaphragms, causing them to press down in turn on the diaphragm shifting pad located immediately under them, this action compressing the spring shown in section. The central spindle at the same time being impelled downward by the diaphragm shifting pad, moves the pawl-like lever shown at the bottom of the cut, this action causing the valve at the lower left hand of the cut to lift downward from its seat. The unseating of this valve permits water from the pumps to enter at the valve-seat just mentioned, this water being

Purchase full membership to immediately unlock this page

DELVE INTO FANTASY, MAGIC, MYTHOLOGY & FOLKLORE

Forgotten Books' Full Membership gives access to 797,885 ancient and modern, fiction and non-fiction books.

Continue

*Fair usage policy applies

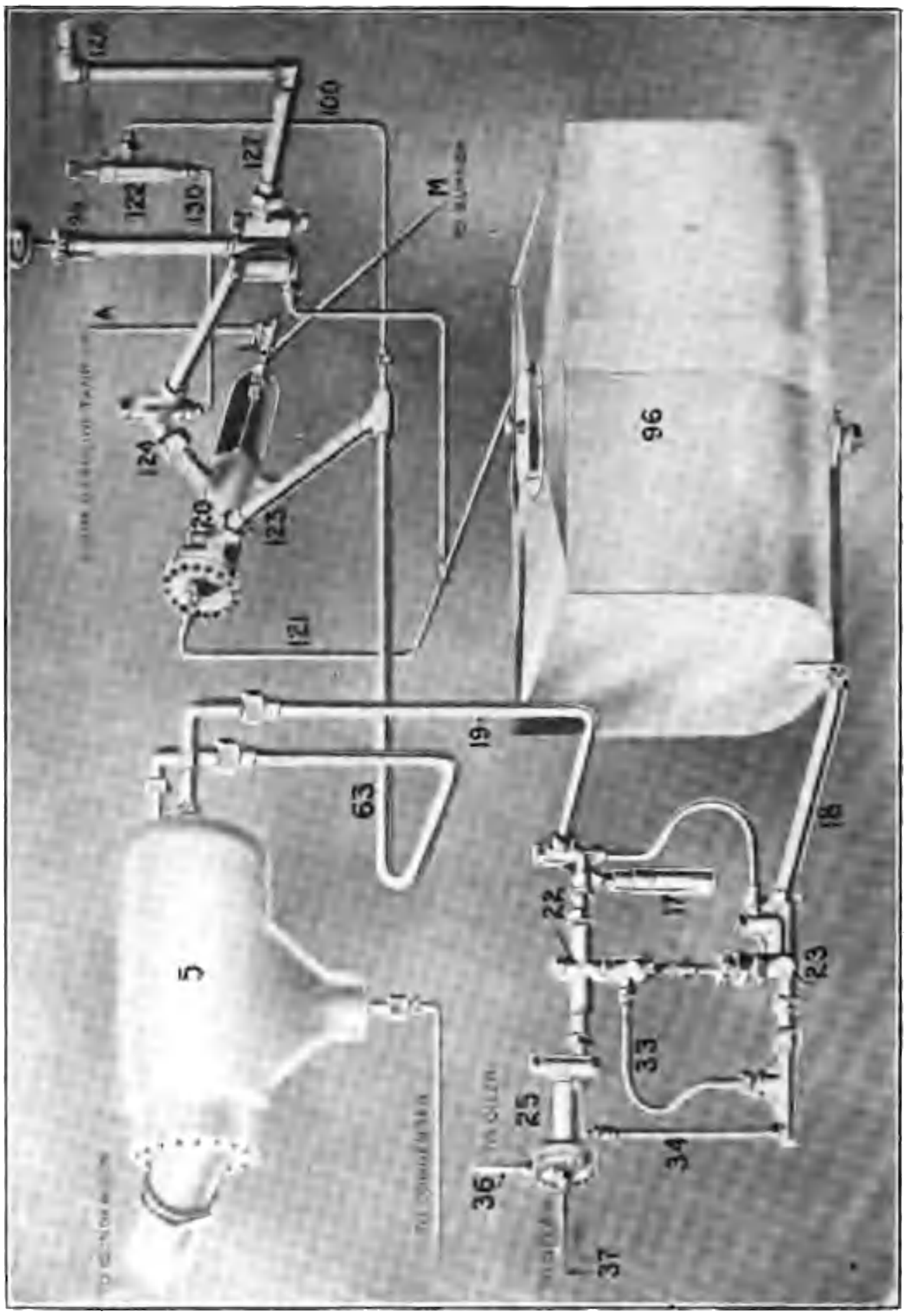

Fig. 147D. Water **System of White Steam Car. The White Company**, Cleveland, Ohio. *A*—Supply-Pipe from **Fuel Tank**; ***M*—Pipe from Flow-Motor Fuel Valve to Vaporizer**; *L*—Flow-Motor Fuel Valve; 5—Feed-Water Heater; 17—Compression Chamber; 18—Suction from Tank; 19—Discharge Pipe from Pump to Feed-Water Heater; 23—Lower Power Pump; 25—Water-Regulator; 33—Power-Pump Stuffing-Boxes; 34—Water-Regulator By-Pass Pipe; 36—To Steam Gauge; 37—Steam Connection of Water-Regulator; 63—Discharge from Feed-Water Heater to **Flow Motor**; 96—Water Tank; **96**—Hand Water Pump; 100—Pipe from 63 to Thermostat; 120—Flow Motor; 121—By-Pass Pipe to Tank; **122—Thermostat; 123—Flow-Motor Inlet; 124—Flow-Motor** Outlet; 127—Pipe to Generator; 128—Generator **Inlet; 130—Pipe from Thermostat to Motor Discharge.**

v from its seat, thus
the passage thus

passing upward
stuffing-box AC,
he cut.
ter in the flow
ve L is closed,
t M. When
roportionally
e vaporizing

very care-
the great-
water and

ws dia-
steam

ted
uld
is
d

Fig. 148. Orient Buckboard.
Waltham Manufacturing Company, Waltham, Mass.

Fig. 149. Orient Buckboard, with Detachable Top.
Waltham Manufacturing Company, Waltham, Mass.

Purchase full membership to immediately unlock this page

HISTORY

Tens of thousands of important historical sources, many previously unobtainable, are now available for the first time with a Forgotten Books Full Membership.

Unlimited Access
$8.99/month

Continue

*Fair usage policy applies

with non-technical ownership of an automobile shop, will serve as an example showing the dangers to which the purchaser exposes himself by buying from such a shop:

A motor-car company recently hired a first-class designer for a short time to work up engine designs, and then let him go—quite a usual procedure. As the fashion changed, larger cylinders were demanded. So the company had their drafting force, now without

Fig. 151. Runabout, with Detachable Top.
Cadillac Motor Car Company, Detroit, Mich.

any competent designing head, put in the larger cylinders without making the proper alterations in design of bearings, shafts, and other parts. The result was that the following season's output of engines simply went to pieces.

Price. What price ought I to pay for my car? Can I get a good car for the price limit I have set? To a large extent these questions will confine themselves to certain limits after the question has been decided into which class your car will come by reason of the purposes for which it will be used the majority of the time.

There will unquestionably be a great market for fairly light cars

Fig. 152. Jewel Runabout.
Forest City Motor Car Company, Massillon, Ohio.

Fig. 153. Suburban Runabout.
Baker Motor Vehicle Company, Cleveland, Ohio.—Mr. W. C. Baker, Designer of First Baker Electric, in Car.

to be run at moderate speeds and to be sold at prices between $500 and $1,500. A person needs to be particularly careful in selecting a car which is sold within this range of prices, especially if the manufacturing company is a new one.

In competition with such cars, it is worth while to consider a second-hand car of well-known high-grade make as a wholly qualified

Fig. 154, Stanhope.
Sometimes equipped with detachable rumble seat.
Studebaker Bros. Mfg. Co., South Bend, Ind.

rival of the cheaper new car. In inspecting such a car, it is advisable to employ the services of an expert, or of an experienced driver or other thoroughly competent person who is as able to give advice on the merits of an automobile as is a piano expert or veterinarian in his own special line. In considering a second-hand car as compared with a new car of cheaper make, it is advisable to look up second-hand cars of the same general type and the same horse-power as the new

Purchase full membership to immediately unlock this page

DELVE INTO FANTASY, MAGIC, MYTHOLOGY & FOLKLORE

Forgotten Books' Full Membership gives access to 797,885 ancient and modern, fiction and non-fiction books.

Continue

*Fair usage policy applies

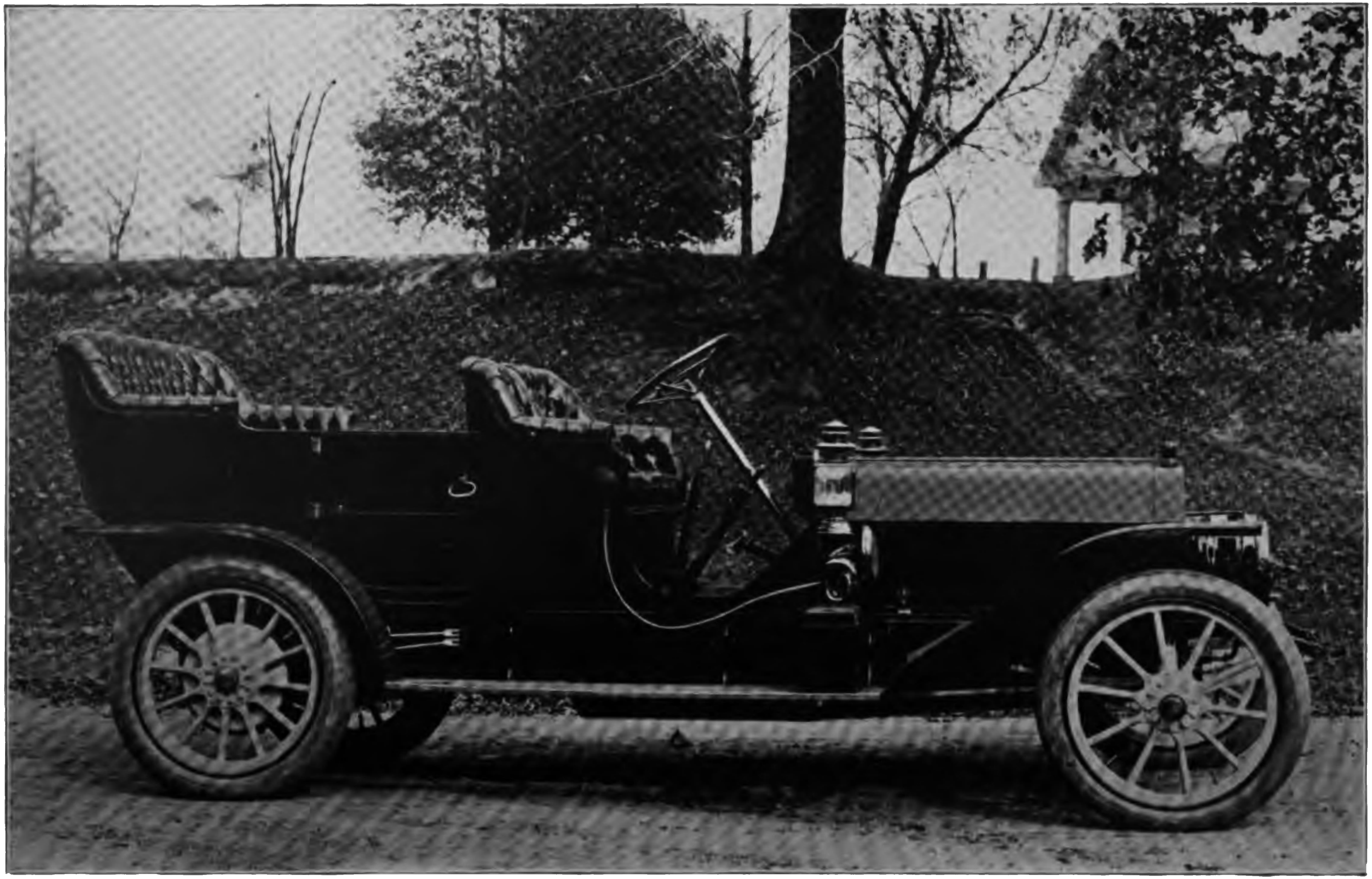

SIX-CYLINDER TOURING CAR, TYPE 45, 1909.
Premier Motor Manufacturing Company, Indianapolis, Ind.

Fig. 155. Baker Electric Stanhope.
Especially adapted for driving by women.
Baker Motor Vehicle Company, Cleveland, Ohio.

Fig. 156. Dos-à-Dos.
A type of seat arrangement (back to back) now no longer regularly manufactured.

car. The reason for this is that if a second-hand car of higher horse-power is purchased, it will cost more to maintain than the new car of smaller horse-power would. It will consume more gasoline, and the work on the tires and consequent wear will be much heavier. It must be borne in mind that the cost of operation and repairs is a higher percentage of first cost in high-power than in low-power cars. It is difficult to state in exact figures how much this cost of operation

Fig. 157. Electric Brougham or Coupé, Inside-Driven.
Baker Motor Vehicle Company, Cleveland, Ohio.

and repairs will be; that depends on the amount of driving a man does. With a high-power fast car, the temptation is to drive hard, and thus run up the cost of fuel and tires.

In considering first cost and cost of maintenance of an automobile, it should be borne in mind that the motor-car is practically horses and carriage combined. Certainly its first cost, in order that it may be a good car, must be as high as that of an extra high-grade horse-propelled carriage, plus the cost of a well-built engine and necessary transmission apparatus. Its stable bill is little after it is at rest. The gasoline bill depends upon the mileage.

Purchase full membership to immediately unlock this page

HISTORY

Tens of thousands of important historical sources, many previously unobtainable, are now available for the first time with a Forgotten Books Full Membership.

Unlimited Access
$8.99/month

Continue

*Fair usage policy applies

Fig. 159. Baker Electric Surrey, with Cape Top.
Can be quickly converted into an inclosed vehicle in stormy weather.
Baker Motor Vehicle Company, Cleveland, Ohio.

Fig. 160 Baker Electric Victoria.
Especially adapted as a private carriage for shopping or for park or avenue driving.
Baker Motor Vehicle Company, Cleveland, Ohio.

Demonstrations. In investigating the relative merits of different types of cars, one should not lay too much stress on a single demonstration. The conditions on the occasion of that demon-

Fig. 161. Touring Car, Seven-Passenger, 30-Horse-Power.
Peerless Motor Car Company, Cleveland, Ohio.

stration may have been exceptionally good or exceptionally bad. The demonstration may have been tuned to the prospective buyer's fancies as indicated to an observant salesman who has carefully

Fig. 162. Frayer-Miller Touring Car, 24-Horse-Power.
Oscar Lear Automobile Company, Springfield, Ohio.

noted them and has instructed the demonstrator accordingly.

Into whichever classification our car may come so far as regards the purpose for which it is to be used, it is certainly sure that it is always the wise course to demand of the car just a little less than its

limit of capacity, speed, or endurance. The cheaper the car, the more important is this caution.

Fig. 163. Franklin Touring Car, with Detachable or Cape Top.
H. H. Franklin Manufacturing Company, Syracuse, N. Y.

Fig. 164. Touring Car, with Detachable Top.
Four-Cylinder, 40-Horse-Power.
American Locomotive Automobile Company, New York, N. Y.

In watching a demonstration, one should note particularly whether there is difficulty, delay, or noise in changing gears; difficulty or delay in braking; overheating; or trouble in starting.

Purchase full membership to immediately unlock this page

DELVE INTO FANTASY, MAGIC, MYTHOLOGY & FOLKLORE

Forgotten Books' Full Membership gives access to 797,885 ancient and modern, fiction and non-fiction books.

Continue

*Fair usage policy applies

High speed and great weight always mean a great amount of wear and tear. Going at high speed is to most people far from a pleasing sensation, when kept up as a regular thing.

The power developed by gasoline motors or engines several years ago was not much more than one-half, for a given diameter of cylinder and stroke, of what it is to-day. A few years ago a good water-cooled motor averaged from 13 to 15 pounds weight of engine to the horse-power. This figure has been reduced to as low as 10 pounds of weight to the horse-power.

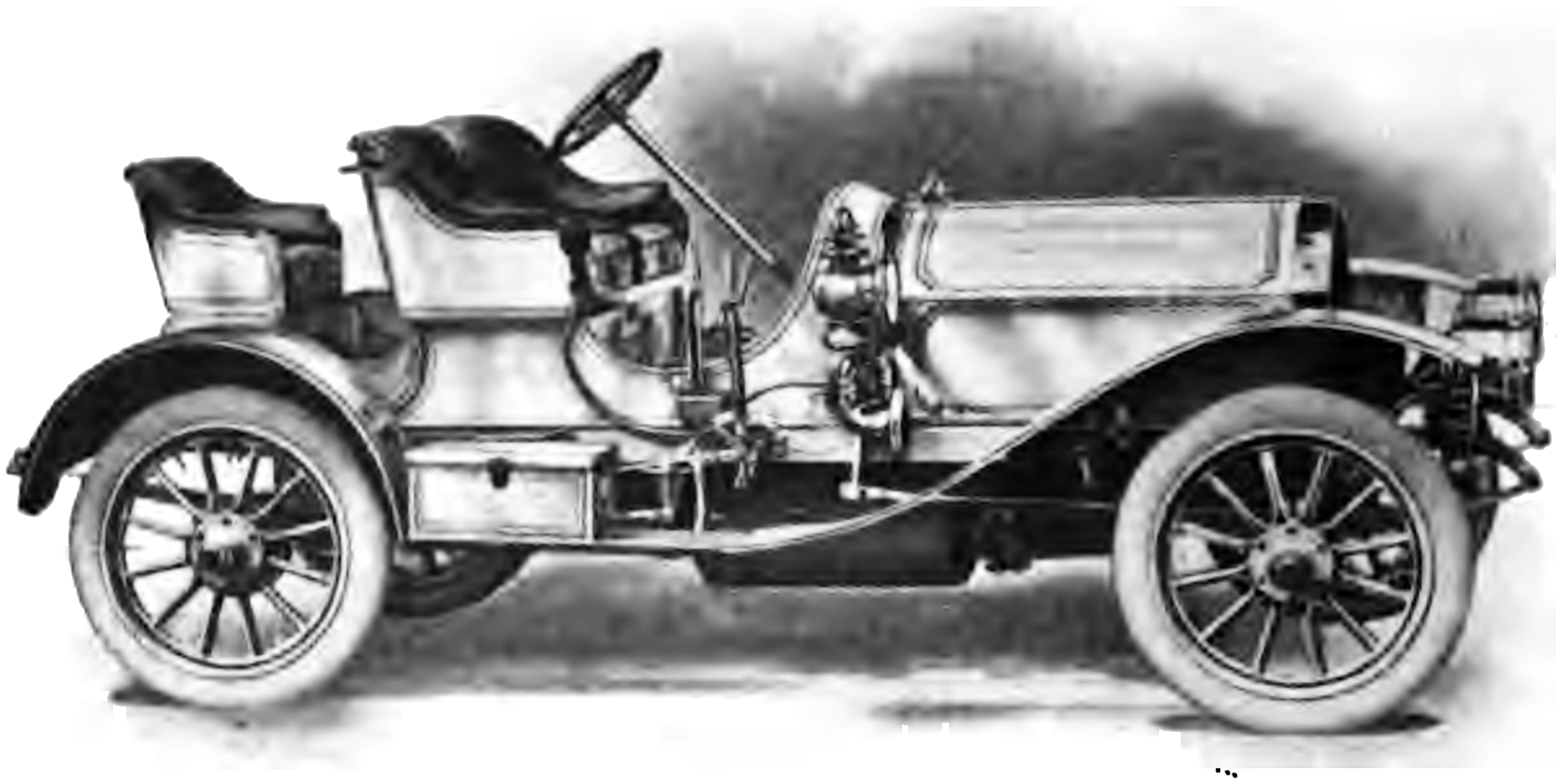

Fig. 167. Sportabout.
Knox Automobile Company, Springfield, Mass.

Easy Riding. A great aid to easy riding is to have the center of gravity of the car as near the ground as possible, with, however, plenty of clearance below the front and rear axles. Large wheels permit of this clearance and give easier riding, as they do not go into small ruts or bumps. A low center of gravity gives less bounding and less danger of turning the car over. With a low car, large wheels must be used.

Rear trucks should be located well back, as in this position easier riding is secured.

Long springs are conducive to easy riding. The American Berliet has a rear spring 43 inches long, and a front spring 36 inches long.

Springs built up of leaves of considerable width, and relatively thin—for example, not less than $1\frac{1}{4}$ inches wide and $\frac{1}{8}$ inch thick—have been found to wear better than those with narrower and thicker laminations.

The easy-riding qualities of a spring depend on its resilience and its ability to absorb shocks without undue recoil. As already stated, this action is facilitated by the use of a long spring. In this respect the three-quarter elliptic is better than the half- or full-elliptic, excepting where the half-elliptic is suspended to a cross-spring at

Fig. 168. Frayer-Miller Taxicab.
Partly a pleasure, partly a commercial vehicle. Extra seats for four passengers in rear. Equipped for public service and supplied with a taximeter.
Oscar Lear Automobile Company, Springfield, Ohio.

right angles to it. Various types of hinged or dashpot types of shock absorbers have also been used with success to lessen the recoil action of springs. It is claimed in behalf of the three-quarter elliptic, that it acts as a shock absorber. The three-quarter elliptic is simply a half-elliptic with a quarter-elliptic supporting one end of it; or it might also be defined as a full-elliptic with one upper quarter cut away.

Ease of Access. The parts liable to require adjustment at any time should be easy of access, without the need of dismantling or partially dismantling the car.

Among the parts which are likely to require adjustment, and

which should always be easy of access, are: Engine inlet and exhaust valves; commutators; pumps (oil and water); clutches; clutch springs; gears; brakes; throttle and spark rods.

Of late years, considerable attention has been paid by most makers to securing accessibility of engine parts; but the same is not true of the rest of the mechanism.

In the case of the engine as a whole, there is no question but that it is easier to lift off a hood than to lift out the floor. At the same time, in the case of clutch and clutch springs, it is easier to lift out the

Fig. 169. Limousine, Four-Cylinder, 22-Horse-Power, Shaft Drive. American Locomotive Automobile Company, New York, N. Y.

floor than to have to take off the whole body. Almost all vehicles are built so that the floor can be taken out; but in many the design is such that after that is done the parts are not sufficiently accessible.

INSTRUCTION IN DRIVING

It is not at all difficult to learn the function and method of operation of the parts which have to be handled in driving a car. These parts include the steering wheel, the throttle and ignition levers, and the brake and change-gear levers and pedals.

To become an expert driver, however, is a different matter. This requires alertness of mind; a refinement of the senses of sight, touch, hearing, and smelling; and an ability to anticipate conditions

Purchase full membership to immediately unlock this page

HISTORY

Tens of thousands of important historical sources, many previously unobtainable, are now available for the first time with a Forgotten Books Full Membership.

Unlimited Access
$8.99/month

Continue

*Fair usage policy applies

higher speed than with a lower gear reduction. The advantages of a low reduction consist in the fact that the engine and all intermediate moving parts between the engine and rear axle run at lower speed and are subject to less wear with a low reduction. For instance, with a ratio of 3 to 1, the engine shaft would be running three times as fast as the rear axle, and with the ratio 4.9 to 1, the engine would be running 4.9 times as fast. On the other hand, it must be borne in mind that with the latter arrangement one could run

Fig. 171. Landaulet, Four-Cylinder, 22-Horse-Power, Shaft Drive. American Locomotive Automobile Company, New York, N. Y.

his car as fast and would not wear out his tires as fast as with a low ratio.

Range of Speeds Obtainable through Gears. Most cars with gear reduction provide three changes of speed. If the engine power is liberal for the weight of the car, it is likely that the driver will seldom make use of more than two speeds; and a number of cars built at moderate price for family use are appreciating this fact by providing but two speeds.

The same is true of a heavy car provided with a liberal surplus of engine power. For instance, for motors having six or eight cylinders, two speeds would be amply sufficient.

Levers and Pedals. The positions of levers for varying speeds should be so distinct that there will be no likelihood of making mistakes through absent-mindedness, carelessness, or "getting rattled."

Fig. 172. Stearns Seven-Passenger "Pullman" Touring Car. 1908 Model.
The F. B. Stearns Company, Cleveland, Ohio.

For instance, in an arrangement in which throwing the lever forward means full speed, throwing it backward means slow speed, and the foot-pedal is used for reversing and braking, there is less liability to error than in arrangements where one lever has to do nearly all of these tasks, especially where the lever position itself is not suggestive of the result.

Any car should be made so that as much of its operation as possible can be done by foot-pedals.

Power. The test of power is hill-climbing. Whatever the

Fig. 178. Cabriolet.
Studebaker Bros. Mfg. Co., South Bend, Ind.

rated load of a car, it should take that load up a hill easily and without strain, and at a good speed. A car that can go thirty miles an hour down hill, and only four miles an hour up hill, would, if we had a hill a mile up and a mile down, take for the two miles 15 minutes up and two minutes down, or at the rate of 8½ minutes per mile. A car going up the hill at ten miles an hour, and down it at twenty miles an hour, would take 6 minutes up and 3 minutes down, or 9 minutes altogether, making the average speed of 4½ minutes per mile, just about twice the average speed of the light-power high-speed car; and this average would be maintained on a day's run over ordinary up and down, smooth and rough roads. With an under-powered car, there is always the temptation to scorch when

Purchase full membership to immediately unlock this page

DELVE INTO FANTASY, MAGIC, MYTHOLOGY & FOLKLORE

Forgotten Books' Full Membership gives access to 797,885 ancient and modern, fiction and non-fiction books.

Continue

*Fair usage policy applies

Breaking of levers or any rod or link or fastening in the steering mechanism, will almost always cause some kind of accident.

Clothing. When driving at twenty miles an hour, the air will actually pass through ordinary overcoats and cloth garments; hence it is necessary that clothing be air-proof, and so contrived that air will not get under the garments.

Leather clothing does not permit of the evaporation of the

Fig. 175. Delivery Car.
Cadillac Motor Car Company, Detroit, Mich.

natural moisture of the body; hence, when it is used, it should be provided with small holes so placed as to provide for the evaporation of this moisture, and at the same time to prevent admission of wind and rain.

The coat should by all means be so made as to fit closely at the wrists. Goggles are indispensable if no front glass is used on the car.

It is worth remembering that if you are in a rain and have no top, the seat cushion should be put inside your coat and not outside.

Top. If the purchaser intends to maintain but one automobile, the body should by all means be provided with either a permanent or an easily attachable top. It is beginning to be appreciated that an automobile is not merely a fair-weather vehicle, but a carriage for all seasons. A modernly equipped automobile provides protection against bad weather, and does away with the necessity for wearing strange apparel making one resemble a diver.

A person who is desirous of traveling in comfort will provide his car with a suitable cover as a protection against wind, rain, dust,

Fig. 176. Auto-Bus or Omnibus.
Studebaker Bros. Mfg. Co., South Bend, Ind.

and mud, without his having to wear any hideous garments. There are certain conditions, however, where a car must be driven stripped —for instance, in conducting mileage trials of cars in process of manufacture. Experienced road testers have all come to learn the need of a tight band about the neck and sleeves. Goggles, ugly as they are, are indispensable to anyone going faster than moderate speeds in a car not provided with glass front.

Accessories. The number of accessories is legion. Many of these are of doubtful utility, and are likely to become a source of annoyance after the wane of the first enthusiasm.

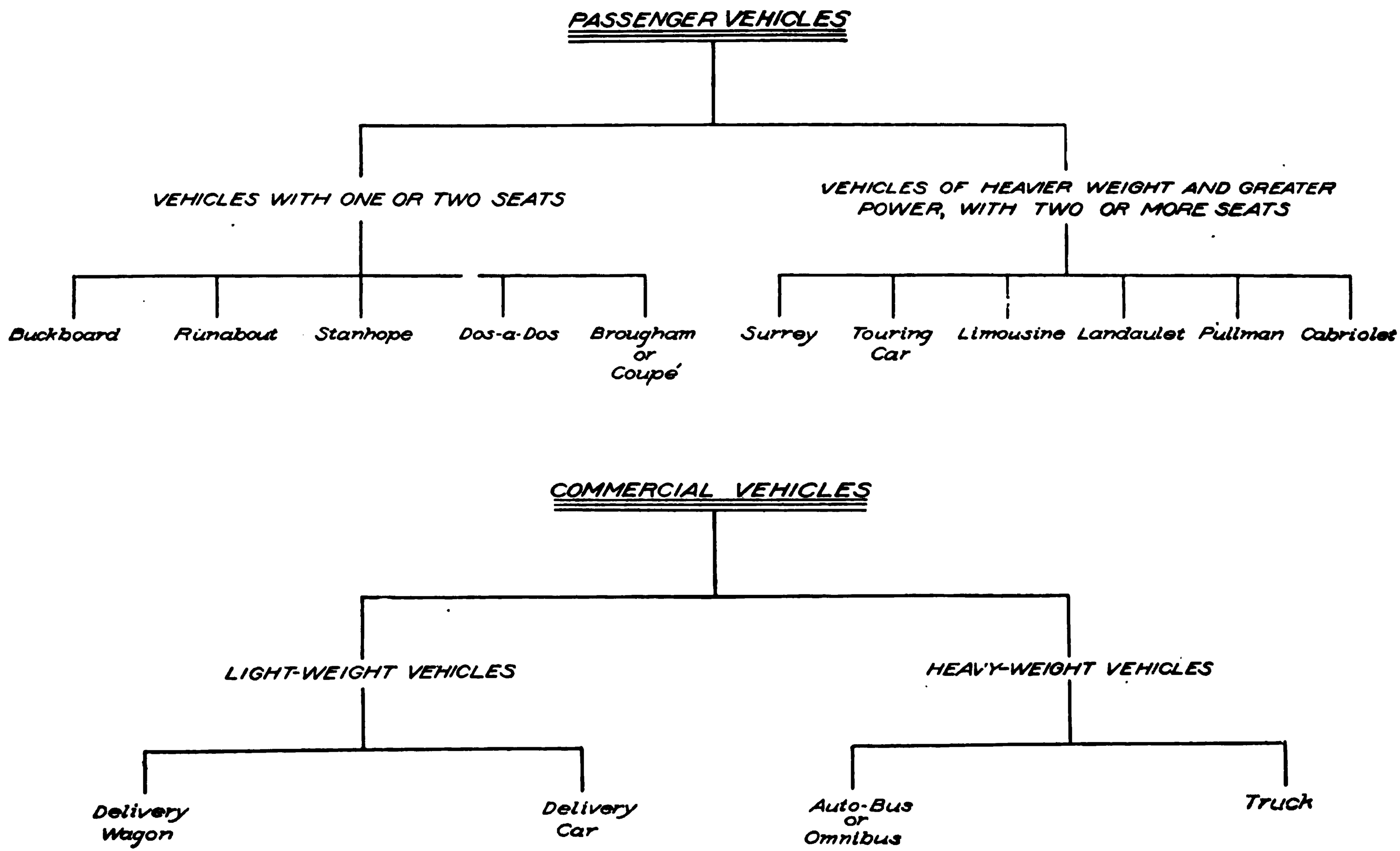

Fig. 177. Classification of Motor Vehicles.

Purchase full membership to immediately unlock this page

HISTORY

Tens of thousands of important historical sources, many previously unobtainable, are now available for the first time with a Forgotten Books Full Membership.

Unlimited Access
$8.99/month

Continue

*Fair usage policy applies

driver's seat left exposed. This vehicle is popular with physicians, as it affords such excellent protection against wind and storm.

Passenger Vehicles with Two or More Seats

1. *Surrey*—Fig. 159.

   A car of very light weight, with two seats, one of which may be folded away when not in use. Sometimes made with a side entrance, in which case it resembles a touring car. The *Victoria* (Fig. 160) is with many a favorite type of private family carriage.

2. *Touring Car*—Figs. 161, 162, 163, 164.

   So called because it is constructed to withstand long drives over country roads. Usually seen without a top. The top which may be used with this type of car is called a *canopy top*, and can be taken off and folded away when not in use. A folding glass front is also used; but, unless the car has a high power, it will set up a resistance to the wind. The *Roadster* or *Sportabout* (Figs. 165, 166, 167) is a

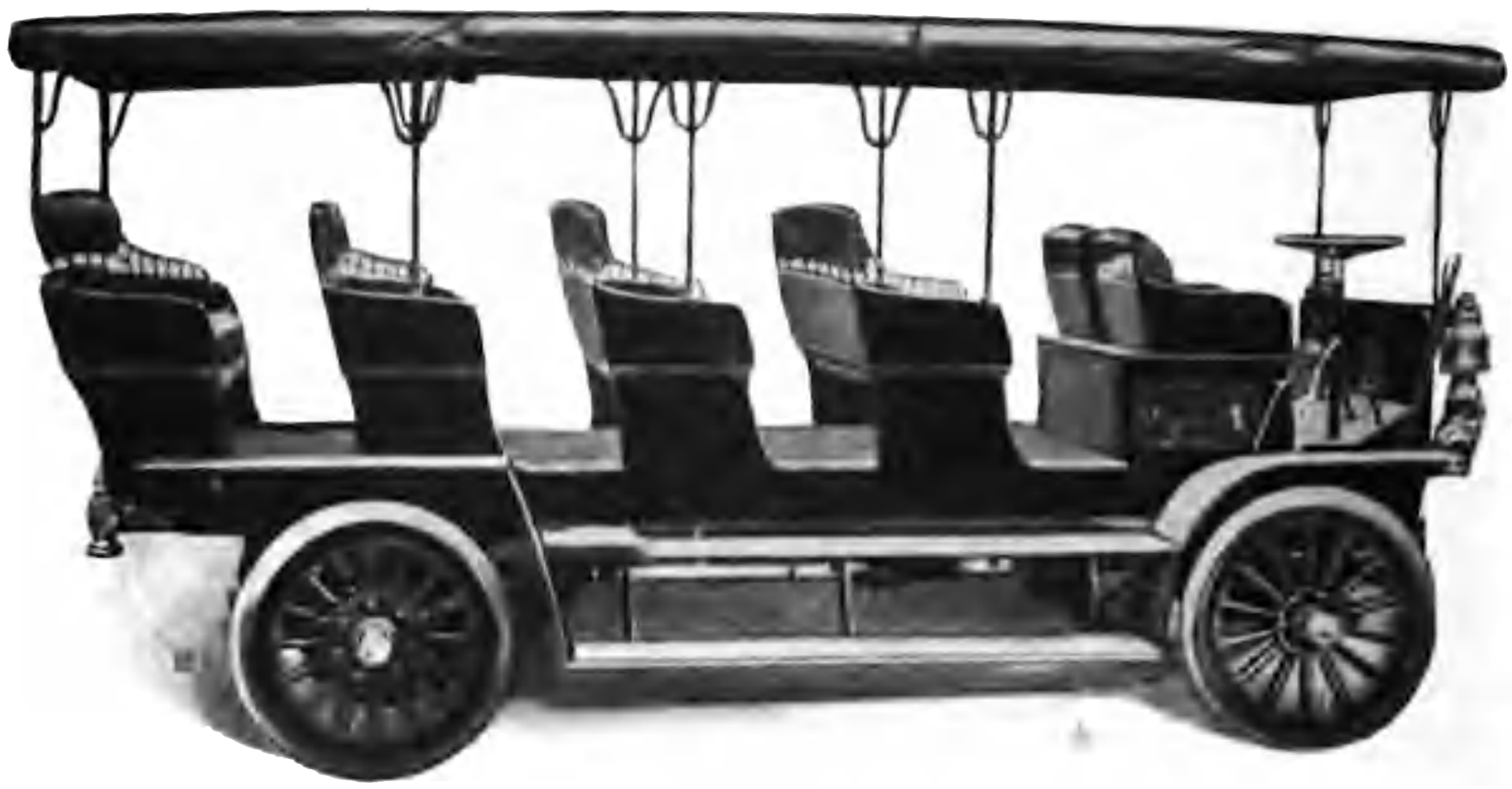

Fig. 178. Stage for Eighteen Passengers.
Oscar Lear Automobile Company, Springfield, Ohio.

type that may be said to be intermediate between the runabout and the touring car, combining the features of compactness, strength, durability, and speed. The *Taxicab* (Fig. 168) is partly a pleasure, partly a commercial vehicle, equipped for public service and supplied with a taximeter.

3. *Limousine*—Figs. 169, 170.

   Similar to a canopy-topped touring car, except that this style of car has its sides more or less completely enclosed. A great objection to the limousine is its immense weight.

4. *Landaulet*—Fig. 171.

   Similar to the limousine. Instead of its top and sides being of rigid construction, they may be folded down when not in use.

5. *Pullman*—Fig. 172.
This is a very large car, seating six persons. Often entirely enclosed except for driver's seat, and usually provided with tables, rotating chairs, and sometimes sleeping accommodations.

6. *Cabriolet*—Fig. 173.
Has a Royal Victoria top over rear seat. Otherwise, in style and shape, it resembles the touring car.

Commercial Light-Weight Vehicles

1. *Delivery Wagon*—Fig. 174.
Corresponds in weight and horse-power to the runabout, and is used as a parcel delivery or for laundry work.

2. *Delivery Car*—Fig. 175.
The weight and horse-power are similar to those of the touring car. Can be used for heavier work than the "wagon."

Commercial Heavy-Weight Vehicles

1. *Auto-Bus* or *Omnibus*—Figs. 176, 178.
Used for commercial purposes, either for sight-seeing or to convey passengers to and from depots.

2. *Truck*—Figs. 179, 180.

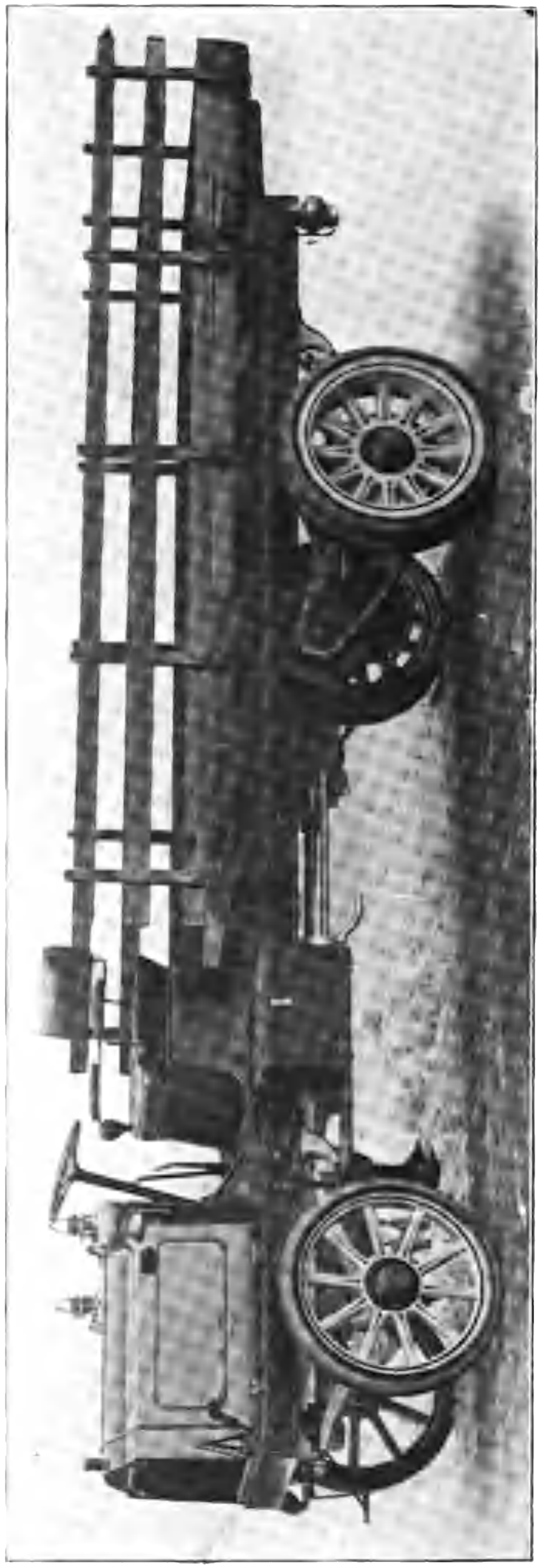

Fig. 179. Packard Truck.
Packard Motor Car Company, Detroit, Mich.

This is in a class by itself because of its exceptionally great weight and power, and is geared for slow speed. The *Van* (Fig. 181) is an enclosed truck for heavy service.

Purposes for which the Automobile is Wanted. In selecting an automobile, the first question to consider is the purpose for which the vehicle is to be used the greater part of the time. The various purposes for which cars are used may be indicated as follows:

1. A business man's means of conveyance between his business office and his residence.
2. A conveyance used by ladies in making calls or in shopping.
3. A physician's vehicle.
4. A vehicle owned by a business establishment for purposes of transportation and entertainment of customers and guests.
5. A family vehicle for pleasure drives.
6. A vehicle for sport on land, corresponding to the power yacht in water.
7. A light delivery wagon.
8. A truck, a dray, or a van.
9. An omnibus.
10. A self-propelling railway car.

Having determined under which of the above headings our vehicle will come, we shall consider what type of vehicle is adapted to meet our special requirements.

CLASS 1. *A business man's means of conveyance between his business office and residence.*

In towns and smaller cities, and for a run of not to exceed five miles between residence and office, if roads are good, the electric vehicle is available for this purpose. In cities like Indianapolis, Ind., and Columbus, Ohio, a large number of electric vehicles are put to this use.

In larger cities, and where fine roads are not so abundant, however, the gasoline car is preferable on account of its greater speed and power. In the case of light cars for this purpose, the tendency is in the direction of two-cylinder runabouts. A decreasing number of single-cylinder makes is being marketed every year.

CLASS 2. *A conveyance for ladies.*

There is but little question that for this purpose the electric vehicle is the best. As between a motor-car and horses for this service, there is nothing but sentiment in favor of the horse, as one car

Purchase full membership to immediately unlock this page

DELVE INTO FANTASY, MAGIC, MYTHOLOGY & FOLKLORE

Forgotten Books' Full Membership gives access to 797,885 ancient and modern, fiction and non-fiction books.

Continue

*Fair usage policy applies

fair roads without steep hills, the electric car is by far the most convenient.

The noise of a gasoline car is likely to be objectionable, particularly in case the engine is left running while the car stands; and if the engine is shut off, the physician has to lose some time and do some work in starting.

The steam car would be freer from the objection of noise; but, like the gasoline car, it has the disadvantage of taking more time to start after a stop than does the electric.

Where a physician has to do much traveling over rough roads, or his mileage exceeds the limit of the electric vehicle, the gasoline runabout would be the next choice for him.

Class 4. *A vehicle owned by a business establishment for purposes of transportation and entertainment of customers and guests.*

Business concerns whose single sales amount to a considerable sum, and who need to entertain prospective customers at headquarters, have found the automobile a great aid to their sales departments. Whether a vehicle of this sort shall partake more of the characteristics of a high-class omnibus or coach, or whether it shall be a high-power, high-speed car, will depend on the number of passengers to be taken, and whether the car will be used primarily as a conveyance or for entertainment.

If the car is to be used primarily as a conveyance, and passes through city streets, it is well to bear in mind that a very long wheelbase is a disadvantage in turning corners and in driving through crowded streets.

If the car is to be used primarily for entertainment of a few people, it will come into Class 6, the pleasure vehicle.

Class 5. *A family vehicle for pleasure drives.*

In this class it is important that the car possess ability to stand considerable strain for a short time. The car is likely to be used Saturdays and Sundays for country tours. If the owner is not a man of mechanical experience, and is his own driver, it is important that he look to simplicity and accessibility of parts in his car. He will find abundant pleasure in tours of not over a hundred miles a day. With this mileage as a gauge, he will not need to buy a car of high horse-power. Twenty to twenty-five horse-power actually developed, will answer his requirements.

The gasoline car and the steam car are the only ones to be considered in this class. Good two-cylinder cars are built that come under this class.

Still lighter cars than above indicated have been used successfully for this service by people who take care in selecting the weather and the roads.

A comfortable, modest-looking vehicle with sufficient power to maintain a speed of twenty miles an hour, amply silenced, with side

Fig. 181. Frayer-Miller Motor-Van.
Capacity 3 Tons; 24-Horse-Power.
Oscar Lear Automobile Company, Springfield, Ohio.

entrances, is the type of car that will answer this purpose. By all means, such a vehicle needs a top.

Class 6. *A vehicle for sport on land, corresponding to the power yacht in water.*

The purchaser of this class of vehicle will probably be in the market every year for the very latest and most improved vehicle to be obtained, which will probably without question be a gasoline car of at least 30-horse-power capacity. The purchaser of this type of car wants speed, endurance, and power. Hence he will study the chassis—namely, the frame with the driving mechanism, stripped

of all accessories and externals. The external features, although pleasing to the eye, are but coverings to the machine itself; and having once selected the machine wanted, he can have it fitted up in a way to suit the most fastidious, provided he places his order early enough.

CLASS 7. *Light delivery wagon.*

For delivery of light goods, the motor-car has by no means come into the general use which it is likely to have within a few years. The builders of electric vehicles have up to this time been the ones to exploit this market, but there is abundant opportunity in this field for gasoline cars of moderate horse-power.

CLASS 8. *Trucks; Drays; Vans.*

Low gear, long wheel-base, and chain drive (usually double-chain) characterize this class of car. Although the electric automobile manufacturers were the first to enter this field, gasoline-driven cars of this type are now appearing in large numbers.

CLASS 9. *Omnibuses; Stages.*

Both steam and gasoline cars are used for this purpose. Much dissatisfaction and agitation were caused in London by the large number of accidents due to this class of vehicle, mainly owing to their too high speed and poor control. These objections must be overcome in a successful auto-bus.

CLASS 10. *Motor-driven railway coaches.*

Chiefly electric or gasoline-driven. Are coming into use on short branch lines and for suburban traffic in railway service.

STATISTICAL

In the five years from 1900 to 1905 the manufacture of automobiles grew from an industry so unimportant that it was not reported separately in the Census of 1900, to one with products valued at nearly $27,000,000 at the Census of 1905. This remarkable growth is not, it is believed, like that of the bicycle industry, based on a fad, and so liable to as sudden a decline. Unlike the bicycle the automobile is not essentially a new vehicle, but merely a carriage or truck with new means of propulsion, possessing many advantages over a vehicle drawn by horses. As a means of amusement its popularity may fluctuate or decline, but its practical value has been so thoroughly demonstrated that its use will doubtless become more and more general.

Purchase full membership to immediately unlock this page

HISTORY

Tens of thousands of important historical sources, many previously unobtainable, are now available for the first time with a Forgotten Books Full Membership.

Unlimited Access
$8.99/month

Continue

*Fair usage policy applies

REVIEW QUESTIONS

ON THE SUBJECT OF

GAS-PRODUCERS.

---

1. How may gases be classified? Define each. To which class does producer gas belong?

2. Into how many classes may the constituents of producer gas be divided? Name each.

3. What effect have the different constituents of producer gas on its properties?

4. What is a fixed gas?

5. Why are gas analyses referred to a standard condition?

6. Explain what is meant by the sensible heat of a gas.

7. Explain the different methods of gas firing.

8. Explain the difference between retort and coke oven gas.

9. What are the essential elements of a successful fuel gas process?

10. Why has producer gas been able to defeat its competitors?

11. How was the producer-gas process first suggested?

12. When was the first gas-producer built?

13. When was producer gas first used for power purposes?

14. What is simple producer gas? Why is its use obsolete?

15. Why may the producer-gas process be spoken of as a triplex process?

16. What is a steam blower? Why should the solid-jet type not be used?

17. Into how many steps may the chemical action in the gas-producer be divided? Name and explain each in detail.

18. What is the object of the ash-zone?

19. Why should the exit temperature of the gas be low?

20. Discuss the value of preheated air.

21. Why is the temperature of the fire important?

22. Explain how the steam acts as a carrier of heat energy between the producer and combustion chamber.

23. How much steam should be given to the producer?

24. What fuels can be used in gas-producers?

25. What effect has the fuel on the resulting gas?

26. What is the advantage of crushed coal?

27. Name some of the absurd terms that have been used.

28. Distinguish between a pressure and an induced-draft producer.

29. Define a suction gas-producer.

30. Why is the efficiency of a gas-producer always less than unity?

31. What should be the efficiency of a good gas-producer?

32. Name the two forms of heat in the gas.

33. Define grate efficiency.

34. Of what value is the testing of a gas-producer?

35. How many heat losses in a gas-producer? Name the important ones.

36. Describe the heat balance.

37. What is the value of the heat balance?

38. Into how many groups may all gas-producers be divided?

39. Explain the difference between an induced-draft and a suction gas-producer.

40. Why is the accurate regulation of the water or steam going to suction gas-producers so desirable?

Purchase full membership to immediately unlock this page

DELVE INTO FANTASY, MAGIC, MYTHOLOGY & FOLKLORE

Forgotten Books' Full Membership gives access to 797,885 ancient and modern, fiction and non-fiction books.

Continue

*Fair usage policy applies

of known heat value. Does the efficiency of the cycle depend on this heat value?

13. Explain clearly, with the aid of indicator cards, the differences between the real and the ideal Otto cycle.

14. Show how to calculate the probable gas consumption of a projected Otto-cycle gas engine.

15. Show how to calculate the I. H. P. of an Otto-cycle gas engine when the indicator card has been taken.

16. Describe *hot-tube ignition*. What are its disadvantages?

17. Explain the difference between *make-and-break* electric ignition and *jump-spark* ignition. What are the relative advantages and disadvantages of the two methods?

18 Describe in detail a typical make-and-break ignition system, giving sketches of the igniter gear, the igniter plug, and the igniter circuit.

19. What is a *spark-coil*, and what is its function in a make-and-break ignition circuit?

20. What is the difference between a *magneto* and a *dynamo?* Why is the latter generally unsatisfactory for supplying current to a variable-speed gas engine?

21. Why must a magneto run in synchronism with the engine to which it is supplying current for ignition?

22. Sketch and explain the action of a magneto of the inductor type. How many electrical impulses does such a magneto give per revolution of the segments?

23. Sketch and explain the action of an *induction coil.*

24. In a multi-cyclinder engine with jump-spark ignition, if only one induction coil is used, a *distributor* will be required. Sketch a distributor, and explain its action. What is a *timer?*

25. Sketch two *spark-plugs.* What troubles are liable to occur with them?

26. Sketch an *oscillating magneto* of the inductor type. What are its principal advantages, and why is it not used on small multi-cylinder engines?

27. Sketch a *magnetic plug.* What are its advantages? Give a diagram of the wiring system to four magnetic igniters.

28. Explain *quantitative* and *qualitative* governing, and point out their relative advantages. Which is the better method of governing?

the pressure attained by the explosion, and the effect of an excess of air on these quantities.

11. Draw a cross-section through the cylinder of a large four-cycle gas engine, showing the valves, valve gear, and governing arrangements. Explain the method of governing.

12. Make sketches showing the methods of cooling the piston, piston-rod, and exhaust valves in a large double-acting engine.

13. How is blast-furnace gas freed from particles of dust? Explain (with a sketch) the action of the most effective of the cleaners.

14. What liquid fuels are available for use in oil engines? Describe the method of refining crude oil. Name and state the important characteristics of the more common refined products.

15. What is *carbureted air?* Sketch and describe the action (*a*) of a carbureter for an engine of moderate power; (*b*) of a spray carbureter for an automobile engine.

16. Sketch and describe the action of an external vaporizer for a heavy oil. What are the special troubles with such vaporizers?

17. Sketch an oil engine with internal vaporizer, and explain its action.

18. Describe the cycle, and draw the indicator card, of a Diesel engine. Why is it possible to burn a smaller amount of oil per cycle than is possible with the Otto cycle?

19. State what you know of the average consumption per indicated horse-power per hour of the various kinds of gas and oil engines.

20. What are *grain alcohol, wood alcohol,* and *denatured alcohol?* How are they made? What is the heat of combustion of denatured alcohol, and how does it compare with that of gasoline and of kerosene?

21. What are the differences between the behavior of gasoline and that of denatured alcohol, and what are the resulting differences in engines using these two fuels?

22. State what you know of the relative cost (on a heat-unit basis) of the various fuels available for gas and oil engines.

23. What are the general characteristics of automobile engines? What are the relative positions of the cranks, and the best order of firing, for 4- and 6-cylinder engines?

24. Sketch three standard arrangements of the valves of automobile engines.

Purchase full membership to immediately unlock this page

HISTORY

Tens of thousands of important historical sources, many previously unobtainable, are now available for the first time with a Forgotten Books Full Membership.

Unlimited Access
$8.99/month

Continue

*Fair usage policy applies

15. What is the tendency of modern practice in regard to proportioning and action of inlet and exhaust valves?

16. What will be the effect on the running of the engine if valves do not seat properly?

17. What points should be observed in grinding valves?

18. What results if valves are not properly timed?

19. What methods are employed to set valves correctly that are not properly timed?

20. What are some of the causes of poor compression?

21. What various methods are employed for cooling the cylinders of automobile gas engines?

22. What are the differences between the tubular and cellular types of radiators?

23. What are gaskets, and of what materials are they usually made in gas-engine practice?

24. Give some of the signs of overheating, and tell what steps should be taken as soon as overheating is noticed.

25. How should the water-cooling system be cared for in cold weather?

26. Describe briefly the various parts which go to make up the gasoline system.

27. Describe fully what is meant by *high-test* gasoline.

28. Describe fully, with sketch, the *float-feed* type of carbureter.

29. Describe the action of the *compensating* type of carbureter.

30. How can one determine whether he has the proper mixture of gasoline and air?

REVIEW QUESTIONS

ON THE SUBJECT OF

AUTOMOBILES

PART II

---

1. What are some of the conclusions with regard to ignition in gasoline engines that have been reached as a result of many years of experimenting?

2. What regulates the time at which sparking takes place?

3. Explain the action of the vibrator or trembler portion of a spark-coil.

4. How should the vibrator be adjusted so as to give most satisfactory service?

5. Make a sketch of the wiring of an ignition system using dry cells and spark-coil.

6. What are the advantages and disadvantages of shunt-wound direct-current dynamos used for generating electromotive force in ignition systems?

7. How does the magneto differ from the shunt-wound dyn mo? What points are in favor of its use in connection with igniti systems?

8. What points should be observed in connection with p care of magnetos?

9. Specify some requisites of a high-grade spark-coil.

10. Explain the make-and-break system of gasolin ignition.

11. How may we determine which is the positive t an electric line which we wish to use for charging storag

12. Explain fully how to *advance* or *retard* the sp what is accomplished by these actions.

13. Explain the action of the throttle-lever.

14. Why should a car not be run with throttle retarded?

15. What are the objects of the muffler cut-out and compression-relief rods respectively in controlling the engine?

16. Explain the action of constriction-band clutches.

17. How are leather or fiber-faced conical disc clutches constructed and operated?

18. Describe the construction and action of multiple-disc clutches.

19. Describe the construction and action of planetary gears.

20. Describe the construction and action of a sliding transmission gear set.

21. What are the causes of difficulty in changing gears, and of gears grinding?

22. Describe briefly five different types of drive.

23. What are differential gears? Describe their action.

24. Discuss lubrication of (*a*) gas-engine cylinders; (*b*) transmission gears and differentials; (*c*) chains; (*d*) crank-cases and crank-shafts; (*e*) universal joints; (*f*) wheels.

25. Describe the construction and operation of mechanically operated lubricators.

26. Discuss the construction and action of automobile brakes.

27. Describe construction and adjustment of (*a*) cylindrical bearings; (*b*) ball bearings; (*c*) roller bearings; (*d*) annular bearings.

28. What are the first things to be done with a new car?

29. Give seven points to be observed in starting an engine.

30. Give some causes of failure of the engine to start.

Purchase full membership to immediately unlock this page

DELVE INTO FANTASY, MAGIC, MYTHOLOGY & FOLKLORE

Forgotten Books' Full Membership gives access to 797,885 ancient and modern, fiction and non-fiction books.

Continue

*Fair usage policy applies

14. How may the proper voltage and current for charging storage batteries be obtained (*a*) from 110- and 220-volt direct-current circuits; (*b*) from 500-volt circuits; (*c*) from alternating-current circuits; (*d*) from a gasoline engine or a line shaft?

15. Describe the electric storage battery and its action.

16. What methods should be employed in charging storage batteries?

17. Give a full discussion of the proper care of electric storage batteries.

18. Describe briefly the power plant of the steam-driven car.

19. What is it necessary to do in order to start a steam-driven car?

20. How are the water supply and fuel supply, respectively, regulated automatically in the White steam car?

21. In selecting a motor-car, from what standpoints should consideration be given to character and standing of the manufacturers?

22. What consideration should govern the price to be paid for a car?

23. What points should be observed in buying a second-hand car?

24. What points should be observed in watching a demonstration?

25. Give a brief discussion of the relation between horse-power and weight of a motor-car.

26. (*a*) Discuss some features of motor-cars that contribute to easy riding. (*b*) What parts should always be easy of access?

27. (*a*) What points should be observed in learning to drive? (*b*) What is the test of power in a car, and what are some disadvantages of an under-powered car?

28. What materials of construction should be used in parts connected with the steering gear, and why?

29. How may motor-cars be classified as vehicles?

30. Give some considerations that would influence you in recommending a car (*a*) for a physician's use; (*b*) for ladies' use; (*c*) for family use; (*d*) for sport.

ttom of the
ction.

	Page
for	
	359
ng	363
	359
	359
	357
	357
	355
	357
	360
	360
	362
	357
	357
	243
	317
	323
	227
	389
	250
	352
	381
	40
	3
	0

	Page
British thermal unit, definition of	14
Bubbling carbureters	200
Buzzer	131
By-product gas-producers	58
definition of	26
C	
Calorific power of a gas	14
Calorific power of producer gas	30
Calory, definition of	14
Cams and cam-shafts	257
Capitaine underfeed gas-producer	42
Carbon dioxide	12
Carbon monoxide	12
Carbureters	196, 283
bubbling	200
compensating	287
connecting and adjusting to motor	289
float-feed	285
leaky float-valves	290
spray	201
surface	200
Carbureted water gas	15
Centigrade unit, definition of	14
Chain-driven rear axle	236
Charter gas engine	91
Chemical action in gas-producer	20
Clutches	
disc	319
metallic constriction-band	317
Coal gas	167
Coke-oven gas	14, 168
Combustion zone	21
Compensating carbureters	287
Compounding	160
Compression-relief levers	315
Condenser	130
Continuous gas-producer, definition of	25
Cooling systems	
air-cooled engine	265
water-cooled engine	271
care of	279
gaskets	275
overheating of	278
steaming radiators	279
Corrosion	265
Crank-shaft	253
Crude oil engines	204

	Page
D	
Decomposition zone	21
Deflectors for cleaning gas	62
Denatured alcohol	215
Diesel cycle	211
Differentials or balance gears	336
Disc clutches	319
Distillation zone	21
Down-draught gas-producer, definition of	26
Dowson water regulator	54
Drive	331
Dry scrubber	179
Duff gas-producer	30
Duff-Whitfield gas-producer	39
Dynamos for charging batteries for ignition	298
E	
Economizer	177
Efficiency of Otto cycle, equation for	102
Electric ignition	111
Electric vehicles	368
Engine-controlling mechanism	309
compression-relief levers	315
muffler cut-out	315
spark-lever	309
throttle lever	310
Engines, gas and oil	75–225
Exhaust	155
External-combustion motor	75
External vaporizer	205
F	
Fairbanks-Morse suction gas-producer	46
Filter for cleaning gas	63
Fixed or permanent gas	12
Float-feed carbureter	285
Forter gas-producer	31
Frame of motor car	231
Fraser & Talbot gas-producer	33
Fuel consumption in gas engine	193
G	
Gas	
sensible heat of	13
specific gravity of	13
volume of	13
Gas cleaning	
cooler	63
deflectors	62

Note.—For page numbers see foot of pages.

Purchase full membership to immediately unlock this page

HISTORY

Tens of thousands of important historical sources, many previously unobtainable, are now available for the first time with a Forgotten Books Full Membership.

Unlimited Access
$8.99/month

Continue

*Fair usage policy applies

	Page
Ignition systems	
dynamo	298
make-and-break	305
spark-plugs	303
storage batteries	307
Induced-draft gas-producers	
American	49
American Crossley	50
Capitaine	42
definition of	25
Fairbanks-Morse	46
Loomis	40
Wyer	53
Inductor magneto, action of	120
Inflation of tires	364
Internal-combustion motor	76
Internal vaporizer	207
K	
Kerosene and crude oil engines	204
cost of fuels	217
denatured alcohol	215
Diesel cycle	211
oil consumption	214
vaporizers	205
Lenoir engine	78
Liquid fuels	193
Liquid scrubbers for cleaning gas	63
Loomis induced-draft gas-producer	40
Low-tension magneto	121
Lubrication	
daily oil and grease	343
differential	346
oil in crank-case	345
oil and oiling	338
transmission case	345
universal joints	346
wheels	346
Lubricators, mechanically operated	340
M	
Magnetic buzzer	132
Magnetic spark-plug	126
Magneto	300
Magneto and dynamo, difference between	115
Magneto-generators	117
Magneto ignition	123
Magneto plug	125
Make-and-break igniter	112
Make-and-break system of ignition	305
Marine engines	221
Marsh gas	12
Mechanical vibrator	131
Mica insulation	140
Modern gas engine	82
Mond by-product gas-producer	60
Morgan gas-producer	37
Motor car	
body	231
classification of	413
power plant	230
running gear	227
selection of	389
Motor troubles, schedule for location of	224
Muffler cut-out	315
Mufflers	155
Mutual induction	130
N	
Nash gas engine	87
Natural-draft gas-producer, definition of	25
Nitrogen	12
O	
Oil consumption	214
Oil gas	15, 168
Olds gas engine	88
Olefiant gas	12
Oscillating magneto	123
Otto cycle	80
efficiency of	102
ideal and real	106
with increased expansion	105
modifications of	159
thermodynamics of	96
Oxygen	12
P	
Pierson water regulator	55
Pittsfield timer	122
Planetary gears	323
Poetter gas-producer	38
Power plant	230, 243
electrically-driven cars	368
gasoline-driven cars	243
steam-driven cars	381
Power-transmission devices	
clutches	317

Note.—For page numbers see foot of pages.

	Page
Power-transmission devices	
speed-changing gears	323
Pressure gas-producers	
Amsler	30
by-product	58
definition of	25
Duff	30
Duff-Whitfield	39
Forter	31
Fraser & Talbot	33
Morgan	37
Poetter	38
Smythe	38
Swindell	30
Taylor	37
Producer gas	15, 168
history of	16
manufacture of	18
fuel used for	23
gas-producers	19
rules for	
calorific power of	30
specific gravity of	29
specific heat of	29
weight of	29
uses of	65
Producer-gas power plants	65, 171
pressure type	172
suction type	173
R	
Retort gas	14
Revolving-contact timer	131
Revolving-cylinder motor	271
Roller-contact timer	135
Rotating scrubbers	63
Running gear of motor car	
axles	227
brakes	230
change-speed devices	228
equalizing mechanism	228
frame	227
springs	227
steering devices	228
tires	227
wheels	227
S	
Scavenging the cylinder	160
Schebler carbureter	201
Scrubbers for cleaning gas	63
Self-induction	129
Sensible heat of a gas	13
Single- and multiple-cylinder engines	250
Skidding	360
Sliding gears	324
Smith water regulator	56
Smythe gas-producer	38
Snap-off timer	134
Spark-coil	111
adjustment of	296
Spark lever	309
Spark-plug	140, 303
Specific gravity of a gas	13
Specific gravity of producer gas	29
Specific heat of producer gas	29
Speed-changing gears	
planetary	323
sliding	324
Speed-changing levers operating sliding gears	326
Spray carbureters	201
Spring-hangers	233
Springs	234
Starting gas engines	148
Steam blowers	19
Steam-driven automobiles	381
Steering connections	239
Steering gear	240
Steering yoke, neck, and knuckle	238
Storage batteries for ignition purposes	307
Suction gas-producers	43
American	49
American Crossley	50
definition of	25
Fairbanks-Morse	46
Wyer	53
Surface carbureters	200
Swindell gas-producer	30
Synchronism	116
T	
Table	
clearance, effects of	104
combustion data	13
fuel gases, composition, heat value, etc., of	170

Note.—For page numbers see foot of pages.

	Page
Table	
heat value of various-priced fuels	217
petroleum density	196
producer-gas analysis	11
temperature, effects of, on action of steam	23
tire inflation	364
weights carried by tires of different sizes	365
Tar	64
Taylor gas-producer	37
Thermal capacity of a substance	13
Thermo-siphon method of water-cooled engine	274
Throttle lever	310
Timing of valves	262
Tire inflation	364
Tires	363
finding a puncture	367
puncture repairing	367
to remove from rim	366
Trembler	131
Two-cycle engines	161, 246
U	
Underfeed gas-producer, definition of	26
Universal joints	333
Valve gearing	94
Valves for motor engines	260
poor compression	264
seating of	260
setting for proper timing	262
Valves for motor engines	
timing of	262
Vaporization of gasoline	196
Vaporizers	196, 205
external	205
internal	207
Variable-impulse system of governing	144
Vibrator	131
action of	295
Volume of a gas	13
W	
Water-cooled engine	271
care of	279
gaskets	275
overheating of	278
steaming radiators	279
Water gas	14, 167
Water jacket	152
Water regulators	
Dowson	54
Pierson	55
Smith	56
Wintherthur	55
Water-seal gas-producer, definition of	25
Water vapor	12
Weight of producer gas	29
Westinghouse carbureter	198
Westinghouse gas engine	83
Wet scrubber	179
Wintherthur water regulator	55
Wipe-contact electric igniter	113
Wyer suction gas-producer	53

Note.—For page numbers see foot of pages.