Forgotten Books

www.forgottenbooks.com

Copyright © 2016 FB &c Ltd.
All rights reserved. No part of this publication may be reproduced, distributed, or transmitted in any form or by any means, including photocopying, recording, or other electronic or mechanical methods, without the prior written permission of the publisher, except in the case of brief quotations embodied in critical reviews and certain other noncommercial uses permitted by copyright law.

# GENERAL CHEMISTRY

## PART I

# PRINCIPLES AND APPLICATIONS

BY

LYMAN C. NEWELL, PH.D. (JOHNS HOPKINS)

PROFESSOR OF CHEMISTRY IN BOSTON UNIVERSITY

AUTHOR OF "EXPERIMENTAL CHEMISTRY," "DESCRIPTIVE CHEMISTRY," "INORGANIC CHEMISTRY FOR COLLEGES"

D. C. HEATH & CO., PUBLISHERS

BOSTON NEW YORK CHICAGO

COPYRIGHT, 1914
BY LYMAN C. NEWELL

I E 4
(G)

# PREFACE

THIS book has been written to meet the demand for a simple and practical treatment of the principles and applications of chemistry. The author realizes that demands are now being made of teachers of chemistry which would hardly have been considered several years ago. Not only must the student be taught the principles of chemistry and their applications in daily life, but he must be taught in such a way that, should occasion arise, he can use chemistry in earning a living. The plea so long made that chemistry is practical and useful is now being tested. Consequently the author has kept one thought in mind during the preparation of this book, viz.: principles and applications must go hand in hand. Principles are the foundation upon which applications rest. To teach either one exclusively is hazardous, for when separated one is as barren as the other is superficial. The author has aimed to include in this book not only the principles of chemistry universally regarded as an essential part of a well-rounded course, but also numerous practical applications.

First, the text includes a clear, simple treatment of the facts, laws, theories, and principles that serve as the foundation of chemistry. This material is written in a style which assumes that the book is to be read, studied, and used by beginners. Special effort has been made to present very clearly such needful topics as atomic weights, equations, and valence. All of this material is made more serviceable by a liberal selection of original exercises and problems containing many novel and attractive features. Teachers will find in these exercises and problems abundant material to drive home principles and arouse interest in the vocational aspects of chemistry.

M623259

Second, the text includes at strategic points illustrated descriptions of (*a*) chemical processes — adequate descriptions which can be used by students in actual study of the manufacture of gas, acids, steel, cement, lime, etc., (*b*) modern electrolytic and electrothermal processes for making aluminium, sodium hydroxide, carborundum, calcium carbide, carbon disulphide, etc., (*c*) recent inventions, such as the oxygen helmet, pulmotor, and oxyacetylene blowpipe, as well as the discoveries centering around radium, and (*d*) the relation of these applications to industries and commerce. Furthermore, in view of the wide-spread interest in the chemistry of life and the home, almost an entire chapter (Chapter XVII) is devoted to food and nutrition, while many cognate topics are scattered throughout the text.

The experiments prepared to accompany this book are published separately and are referred to in the text as Part II. These experiments have been selected and arranged with exceptional care. A novel feature is the division of the experiments into "regular" and "supplementary." The regular experiments include those needed by the average class, while the supplementary set includes additional experiments of varying length and difficulty. This liberal provision will permit teachers to select experiments suitable for various needs.

The author is grateful to many teachers and former students for helpful suggestions. He is specially indebted to Mr. Royal M. Frye, Boston University, 1911, for assistance in reading the manuscript and proof and to Mr. Harold C. Spencer, Boston University, 1914, for making most of the drawings.

L. C. N.

BOSTON, MASS.
May, 1914.

# CONTENTS


| CHAPTER | | PAGE |
|---|---|---|
| I. | Chemistry — Substances — Properties — Changes — Classes of Properties and Substances — Distribution of Elements | 1 |
| II. | Oxygen | 11 |
| III. | Hydrogen | 22 |
| IV. | Some Properties of Gases | 30 |
| V. | Properties of Water | 36 |
| VI. | Composition of Water — Hydrogen Dioxide | 49 |
| VII. | Law and Theory — Laws of Definite and Multiple Proportions — Atomic Theory — Atoms and Molecules — Symbols and Formulas | 55 |
| VIII. | Chemical Reactions, Equations, and Calculations | 65 |
| IX. | Chlorine — Hydrochloric Acid — Acids, Salts, and Bases | 73 |
| X. | Nitrogen — Ammonia — Nitric Acid and Nitrates — Nitrogen Oxides | 86 |
| XI. | The Atmosphere — Argon — Liquid Air | 104 |
| XII. | Gay-Lussac's Law of Gas Volumes — Avogadro's Hypothesis — Molecular Weights and Atomic Weights — Molecular Formulas and Equations | 113 |
| XIII. | Valence — Equivalent Weight | 126 |
| XIV. | Solution — Acids, Bases, and Salts | 136 |
| XV. | Carbon — Oxides and Carbonates — Hydrocarbons — Carbides — Cyanogen | 154 |
| XVI. | Illuminating Gases — Flames | 181 |
| XVII. | Other Carbon Compounds — Food and Nutrition | 193 |
| XVIII. | Sulphur — Sulphides — Sulphur Oxides, Acids, and Salts | 226 |
| XIX. | Boron — Borax — Boric Acid | 245 |

CHAPTER PAGE

XX. Silicon — Silicon Dioxide — Silicic Acid and Silicates — Glass . . . . . 248

XXI. Classification of the Elements — Metals and Non-Metals — Periodic Classification . . . . . 259

XXII. Fluorine — Bromine — Iodine . . . . . 266

XXIII. Phosphorus — Arsenic — Antimony — Bismuth . . . 275

XXIV. Sodium — Potassium — Ammonium Compounds . . . 288

XXV. Copper — Silver — Gold . . . . . 303

XXVI. Calcium — Strontium and Barium . . . . . 318

XXVII. Aluminium — Clay and Clay Products . . . . . 328

XXVIII. Iron — Nickel and Cobalt . . . . . 337

XXIX. Magnesium — Zinc — Cadmium — Mercury . . . . . 354

XXX. Tin — Lead . . . . . 365

XXXI. Chromium — Manganese . . . . . 374

XXXII. Platinum . . . . . 380

XXXIII. Radium and Radioactivity . . . . . 382

Appendix . . . . . 388

Index . . . . . 392

# GENERAL CHEMISTRY

## PRINCIPLES AND APPLICATIONS

## CHAPTER I

### CHEMISTRY — SUBSTANCES — PROPERTIES — CHANGES — CLASSES OF PROPERTIES AND SUBSTANCES — DISTRIBUTION OF ELEMENTS

**1. Chemistry** deals chiefly with substances, their properties, and the changes they undergo. Since it is a branch of natural science, chemistry also treats of certain laws and theories which help us understand the relations of different substances. Furthermore, chemistry includes a description of various industries and a consideration of numerous processes connected with life itself.

**2. Substances.** — The world about us is made up of substances. Wood, glass, paper, food, cloth, soil, and metals are familiar substances; air, water, and all other gases and liquids are also substances. We might define **substances** as the material of which bodies are made.

**3. Properties of Substances.** — Substances are recognized and distinguished by certain characteristics known as **properties.** A given substance always has a group of properties, often some distinctive ones which enable us to identify the substance. Thus, gasoline is a liquid which yields an explosive vapor. Many properties are easily detected by mere observation, e.g. color, taste, odor, hardness, and physical state (i.e. whether solid,

liquid, or gas). Other properties are readily found by more careful observation and experiment, e.g. boiling point, melting point, solubility, conductivity of heat and electricity, and specific gravity (i.e. relative weight). Still other properties are found only by special experiments; to this class belong many of the properties exhibited when two or more substances act chemically upon one another.

**4. Changes in Substances.** — We know by experience that substances are undergoing changes. Thus, water evaporates, plants grow, food digests, and metals rust. Not only are substances changing but they can be changed at will. For example, the wood, paper, and coal lie together unchanged in the stove until a lighted match is applied, and then all three substances take fire and burn, that is they change into gases and ashes.

We know these changes in substances take place, because the original substance with its distinctive properties disappears and one or more substances with new properties appear. Thus, water changes into steam or ice, and black coal can be changed into invisible gases and a white ash.

Changes in substances are shown by change in properties. **A physical change** is a change in which the substance remains the same, though some of its properties are temporarily changed. For example, copper trolley wire has the properties characteristic of the metal copper; when the dynamo is in operation, however, the

the change was temporary, however, for as soon as the original conditions were restored, the copper lost its electricity, so to speak, and became copper as we ordinarily know it. By this physical change, the copper was not fundamentally or permanently changed, nor was it transformed into another substance; it merely acquired for a time certain properties characteristic of copper under certain conditions. In physical changes, then, the change is only temporary, and the substance regains its familiar properties as soon as the original conditions are restored. **A chemical change** is a change in which one or more new substances are formed. For example, if copper wire is heated very hot, the copper disappears and is replaced by a black, brittle solid, which does not become copper again when removed from the flame and cooled. The copper was chemically changed. That is, the distinctive characteristics of the copper were permanently changed, for as soon as the original conditions were restored, the copper did not reappear but in its place was a new substance with properties quite different from the original copper. By this chemical change the copper was transformed into another substance. In chemical changes the change is permanent, and the original substance with its characteristic properties is replaced by one or more new substances with characteristic properties. Physical and chemical changes are closely related and it is not always easy to call certain changes entirely physical or exclusively chemical. Most chemical changes involve some kind of obvious physical change, e.g. a change in temperature or in physical state. The test by which we determine whether the change in substances is physical or chemical is the formation of new substances; in physical changes new substances are not formed, while in

chemical changes new substances are formed. (See Part II, Exps. **2, 4, 5.**)

Examples of familiar physical changes are the countless number of changes in physical state (i.e. from solid to liquid and to gas, and vice versa), the electrification of glass, rubber, and metals, and the magnetization of iron in a dynamo or magnet. Examples of familiar chemical changes are the rusting of iron and the tarnishing of other metals, the burning of oil in a lamp and the explosion of gasoline in an automobile engine, the digestion of food, and the combustion of wood and coal.

**5. Classes of Properties.**—**Physical properties** are those that are characteristic of a substance as we usually observe it and also those that can be detected while a substance is undergoing or has undergone a physical change. **Chemical properties** are those that are revealed when a substance undergoes a chemical change. Among the important physical properties are color, luster, odor, taste, crystalline structure, conductivity for heat and for electricity, and weight. Chemical properties appear when substances are subjected to the action of light or electricity, and especially when certain substances are heated or are brought into contact by pressing, mixing, or dissolving. For example, several physical properties of copper are readily observed and others can be detected and measured by causing the copper to undergo physical changes. Likewise, its chemical properties can be found by performing certain experiments. Thus, when warmed

**6. Classes of Substances.** — We divide substances into three classes — mixtures, compounds, and elements. These classes, especially compounds and elements, are closely related and are often conveniently studied together. For example, the element oxygen will soon be studied, and at the same time we shall see that oxygen forms many compounds with other elements and is also one ingredient of the mixture of gases known as air.

**7. General Characteristics and Relations of Mixtures, Compounds, and Elements.** — A **mixture** is composed of two or more substances in varying proportions. In **mechanical mixtures** the ingredients may often be distinguished and quite readily separated. Paint, many kinds of food, gunpowder, and muddy water are examples of mechanical mixtures. Mechanical mixtures are common in nature, e.g. soil, clay, and many rocks. The substances making up these mechanical mixtures can often be seen with the eye or a lens, and can be more or less easily separated by such mechanical operations as grinding, sifting, dissolving, and filtering. A **solution** is likewise a mixture which is composed of two or more substances in varying proportions, but the ingredients of a solution cannot be distinguished nor separated by the operations that are effective in the case of mechanical mixtures. Many of the properties of solutions, like those of mechanical mixtures, depend upon the nature and the proportion of the ingredients, but solutions have other properties which are very important. Solutions are sometimes called homogeneous mixtures, because all parts are alike, and in this respect they differ quite markedly from mechanical mixtures.

A **compound** is composed of two or more substances, but compounds differ fundamentally from mechanical

mixtures and solutions. The ingredients of a **compound** are special substances known as elements, and in a given compound the elements are always the same and are present in an unvarying ratio by weight. Thus, the compound commonly known as salt is 39.34 per cent of the element sodium and 60.65 per cent of the element chlorine. Moreover, the elements that make up a compound are not mixed as in the case of mechanical mixtures and solutions but are united chemically, i.e. they are not lying side by side nor merely intermingled, but chemically combined; a compound, to be separated into its constituents, must be subjected to conditions which will bring about a chemical change. And finally, although compounds are homogeneous, their properties differ from those of the elements that compose them. Thus, the colorless liquid, water, is a compound of the gaseous elements hydrogen and oxygen. There is a very large number of compounds, and all consist of two or more elements chemically combined.

An **element** consists of a single substance. That is, iron is nothing but iron, copper is nothing but copper, and so with sulphur, oxygen, and all the other elements. Elements are fundamental substances. They are the substances from which compounds are made. A compound can be decomposed into its constituent elements, but we cannot go further back than an element. For most purposes, it will be correct to regard elements as the fundamental substances from which compounds are formed and to which compounds may finally be reduced.

There are about eighty elements, and for convenience each element is designated by a **symbol,** which is an abbreviation of its name. The important elements and their symbols are given in the accompanying table.

TABLE OF THE IMPORTANT ELEMENTS *

| Element | Symbol | Element | Symbol |
|---|---|---|---|
| **Aluminium** | Al | Iron | Fe |
| **Antimony** | Sb | Lead | Pb |
| **Argon** | A | Magnesium | Mg |
| **Arsenic** | As | Manganese | Mn |
| **Barium** | Ba | Mercury | Hg |
| **Bismuth** | Bi | Nickel | Ni |
| **Boron** | B | Nitrogen | N |
| **Bromine** | Br | Oxygen | O |
| **Cadmium** | Cd | Phosphorus | P |
| **Calcium** | Ca | Platinum | Pt |
| **Carbon** | C | Potassium | K |
| **Chlorine** | Cl | Radium | Ra |
| **Chromium** | Cr | Silicon | Si |
| **Cobalt** | Co | Silver | Ag |
| **Copper** | Cu | Sodium | Na |
| **Fluorine** | F | Strontium | Sr |
| **Gold** | Au | Sulphur | S |
| **Hydrogen** | H | Tin | Sn |
| **Iodine** | I | Zinc | Zn |

**8. Distribution of the Elements.** — Our knowledge of the abundance of the elements is based on a study of the atmosphere, the ocean, a shell of the earth's crust, and the human body. The atmosphere contains about 20 per cent of oxygen, 79 of nitrogen, and 1 of argon. The elements in the ocean are not free like those in the atmosphere but are combined in various compounds. The abundance of the elements is shown in the accompanying tables.

* A complete table of the elements may be found on the inside of the back cover of this book.

TABLE OF THE APPROXIMATE COMPOSITION OF THE OCEAN

| Element | Per Cent | Element | Per Cent |
|---|---|---|---|
| Oxygen | 85.79 | Sulphur | .09 |
| Hydrogen | 10.67 | Calcium | .05 |
| Chlorine | 2.07 | Bromine | .008 |
| Sodium | 1.14 | Carbon | .002 |
| Magnesium | .14 | Other Elements | traces |

In the ten mile shell of the earth's crust the chief elements are combined. Their proportions appear in the following:—

TABLE OF THE APPROXIMATE COMPOSITION OF THE EARTH'S CRUST

| Element | Per Cent | Graphic Proportion |
|---|---|---|
| Oxygen | 47.07 | |
| Silicon | 28.06 | |
| Aluminium | 7.90 | |
| Iron | 4.43 | |
| Calcium | 3.44 | |
| Potassium | 2.45 | |
| Sodium | 2.43 | |
| Magnesium | 2.40 | |
| Remainder | 1.82 | |

Many experiments show that the per cent of the elements in the human body is probably about as follows:—

TABLE OF THE AVERAGE COMPOSITION OF THE HUMAN BODY

| Element | Per Cent | Element | Per cent | Element | Per Cent |
|---|---|---|---|---|---|
| Oxygen | 65.00 | Phosphorus | 1.00 | Magnesium | 0.05 |
| Carbon | 18.00 | Potassium | 0.35 | Iron | 0.004 |
| Hydrogen | 10.00 | Sulphur | 0.25 | Iodine | trace |
| Nitrogen | 3.00 | Sodium | 0.15 | Fluorine | trace |
| Calcium | 2.00 | Chlorine | 0.15 | Silicon | trace |

It is evident from these tables that only about a dozen elements are abundant. A few elements in both free and combined states provide most of the substances studied in chemistry.

## EXERCISES

**1.** State some characteristic properties of (*a*) glass, (*b*) kerosene, (*c*) water, (*d*) paper, (*e*) air, (*f*) lead.

**2.** Give, from your own observation, three illustrations of (*a*) physical change and (*b*) chemical change.

**3.** Select the physical and the chemical changes from the following: (*a*) Burning of wood, (*b*) melting of butter, (*c*) freezing of an ice-cream mixture, (*d*) weathering of granite, (*e*) tarnishing of brass and other metals, (*f*) formation of snow, (*g*) decay of food, (*h*) seasoning of wood, (*i*) formation of dew, (*j*) disappearance of fog, (*k*) drying of food, (*l*) fading of colored cloth, (*m*) burning of illuminating gas, (*n*) explosion of gasoline, (*o*) melting of a wax candle, (*p*) burning of a wax candle.

**4.** Name (*a*) five substances you know are elements and (*b*) five you know are compounds.

**5.** Name (*a*) three familiar mixtures and (*b*) three familiar solutions.

**6.** How can water be distinguished from gasoline? Gold from brass? Glass from sand? Air from illuminating gas?

**7.** Name five elements with which you were familiar before beginning to study chemistry. Name the eight most abundant elements in the earth's crust in their order.

**8.** Express the relative abundance of the elements by a diagram.

**9.** How do elements and compounds differ? Could you prepare (*a*) a compound from elements, (*b*) elements from a compound, (*c*) compounds from compounds, (*d*) elements from elements?

**10.** Define and illustrate (*a*) substance, (*b*) physical change, (*c*) chemical change, (*d*) element, (*e*) compound, (*f*) mixture, (*g*) solution, (*h*) symbol.

**11.** What is the derivation of the words chemistry and alchemy? (Consult a Dictionary or a History of Chemistry.)

## PROBLEMS

[*The Metric System of Weights and Measures is constantly used in Chemistry, and it should be learned or reviewed at once. See Appendix*, § 1.]

**1.** What is the abbreviation of gram, centigram, liter, meter, cubic centimeter, centimeter, decimeter, milligram, millimeter?

**2.** Express (*a*) 1 liter in cubic centimeters, (*b*) 2 l. in cc., (*c*) 1 meter in

centimeters, (*d*) 250 cm. in dm., (*e*) 1 kg. in grams, (*f*) 250 gm. in mg., (*g*) 56.75 l. in cc., (*h*) 1250 cc. in l., (*i*) 1 cc. in cu. m.

**3.** Add 2 kg., 1.5 dg., 22 cg., 14 gm., and 7 mg., and express the sum in (*a*) grams, (*b*) decigrams, (*c*) milligrams.

**4.** How many cc. in (*a*) 1 liter, (*b*) 1 cu. dm., (*c*) 1 cu. m.?

**5.** What is the weight in grams of (*a*) 1 liter of water, (*b*) 250 cc.?

**6.** What is the volume in cc. of (*a*) 1 kg. of water, (*b*) 1 l., (*c*) 1 cu. dm., (*d*) 2.2 lb.?

**7.** If 1 m. of magnesium ribbon weighs 4 dg., how many mg. will 5 cm. weigh?

**8.** Into how many pieces 5 cm. long can a glass tube 1 m. long be cut?

**9.** A flask holds 750 cc. Express its capacity in (*a*) l., (*b*) cu. dm., (*c*) cu. mm.

**10.** A bottle holds exactly 1250 cc. How many grams of water will fill it? How many kg.? How many pints? How many l.?

**11.** A pupil prepared five 250 cc. bottles of oxygen gas. Express the total volume in (*a*) cu. dm., (*b*) l., (*c*) cubic centimeters.

**12.** A pneumatic trough is 80 mm. deep, 25 cm. long, and 1 dm. wide. How many l. of water will it hold? How many cc.?

**13.** A cube measures 1.5 cm. on each edge. What is its volume in cu. mm.?

**14.** How many cc. of mercury are needed to fill a tube 1.2 sq. mm. in cross section and 1.7 m. long?

**15.** The square lead of a pencil is 2 mm. wide, 2 mm. thick, and 15 cm. long. What is its volume in cu. mm.?

**16.** A cylindrical iron pipe is 2 m. long and 90 mm. in internal diameter. How many cc. of water will it hold?

THIS PAGE IS LOCKED TO FREE MEMBERS
Purchase full membership to immediately unlock this page

HISTORY

Tens of thousands of important historical sources, many previously unobtainable, are now available for the first time with a Forgotten Books Full Membership.

Unlimited Access
$8.99/month

Continue

*Fair usage policy applies

barium dioxide, and manganese dioxide. Thus, potassium chlorate — a compound of oxygen, chlorine, and potassium — when heated to a moderately high temperature yields all its oxygen, while a white substance called potassium chloride remains. (See Part II, Exp. **8**.)

Oxygen can also be prepared from water. When an electric current is passed through water which contains a little sulphuric acid, the gases oxygen and hydrogen are liberated (**54**), and when sodium peroxide is dropped into water, oxygen is liberated. (See Part II, Exp. **8 D**.)

Oxygen is most conveniently prepared in the laboratory by heating a mixture of potassium chlorate and manganese dioxide in a glass or metal vessel, and collecting the liberated oxygen in a bottle by means of a pneumatic trough (Fig. 1). (See Part II, Exp. **6 I**.)

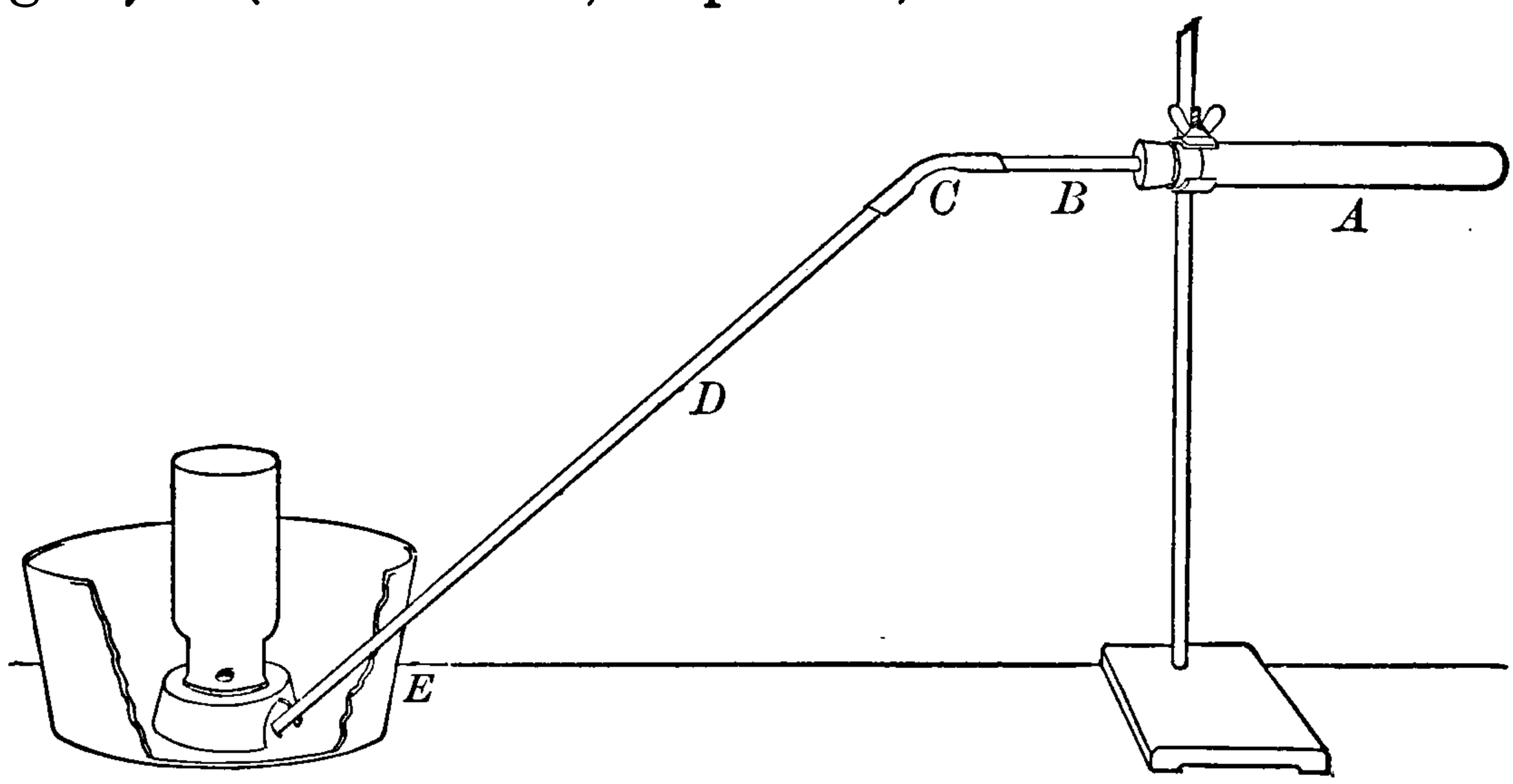


Fig. 1 — Apparatus for Preparing Oxygen.

**11. The Preparation of Oxygen illustrates Chemical Change.** — Let us consider mercuric oxide. The chemical change consists in the decomposition of the compound mercuric oxide into the elements mercury and oxygen. This chemical change may be compactly expressed thus: —

Mercuric Oxide = Mercury + Oxygen
(Mercury-Oxygen)

Such an equation may be read: Mercuric oxide equals mercury plus oxygen. The simple fact that mercuric oxide can be decomposed into mercury and oxygen is not the only reason for expressing the chemical change by an equation. We can also show by experiment that when a given quantity of mercuric oxide is entirely decomposed, the weight of the original mercuric oxide equals the sum of the weights of the mercury and oxygen produced. This equality of weights is very important and will be discussed later. At present we shall use equations merely to emphasize certain facts about chemical changes, chiefly the formation of new substances. Chemical changes like that just described are common, and the term *decomposition* is applied to them. **Decomposition** may be defined as a chemical change in which a compound is separated chemically into other substances which are elements or compounds.

**12. Physical Properties.** — Pure oxygen gas has no color, odor, or taste; certain impurities give a slight odor and taste to the gas prepared in the laboratory. It is not very soluble in water. Oxygen is slightly heavier than air. One liter of oxygen weighs 1.429 grams when the gas is at the temperature of zero degrees as registered by a centigrade thermometer and also under a pressure of 760 millimeters as registered by a barometer (or briefly at 0° C. and 760 mm.). (The weight of a liter of any gas, to be of use in chemistry, must be taken when the volume of the gas is measured at the standard temperature (0° C.) and pressure (760 mm.)). (See Chapter IV.)

If compressed and subjected to a very low temperature, oxygen becomes a pale blue liquid, which is slightly heavier than water; at an extremely low temperature the liquid becomes a light blue solid.

**13. Chemical Properties.** — The chief chemical property of oxygen is the ease with which it combines or interacts with other substances. Oxygen forms compounds with most elements and it interacts chemically with many compounds. This combining or interacting is often made conspicuous by the accompanying light and heat. At ordinary temperatures oxygen unites slowly with most elements. Thus, metals, such as lead, zinc, and copper, tarnish or rust slowly, i.e. they combine slowly with the oxygen of the air; with phosphorus, however, the chemical action is quite rapid, as may be seen by the glow and fumes when the end of a phosphorus-tipped match is rubbed, especially in the dark. The chemical activity of oxygen at high temperatures is readily shown by putting burning or glowing substances into it. The action becomes more energetic, and many substances burn rapidly and brilliantly in oxygen. (See Part II, Exp. **6 II.**)

**14. Test for Oxygen.** — The conspicuous behavior of a glowing stick or burning substance when put into oxygen enables us to distinguish oxygen from other gases. This critical examination which is made to establish the identity of oxygen is called testing or making a test. Each element has properties which respond to appropriate tests. All compounds likewise behave in some decisive way when subjected to tests.

**15. The Chief Chemical Property of Oxygen illustrates Chemical Change.** — In the experiments described in paragraph **13**, one feature is conspicuous, viz. the disappearance of the original substances and the formation of new substances. The chemical change in the case of the carbon, sulphur, iron, and magnesium is the combining of oxygen with these elements. The oxygen is added chemically to each element and the product is a compound of the two elements. In the case of sub-

stances like wood, which is essentially a compound of carbon, hydrogen, and oxygen, the chemical change is similar, for the oxygen combines with one or more of the elements in the compound.

The fact that the chemical change just described is a combining of these elements with oxygen can be easily verified. It has been repeatedly shown that oxygen is one constituent of all the products formed by burning substances in that gas. Thus, carbon forms an invisible gas called carbon dioxide, which is a compound of carbon and oxygen. Similarly, sulphur, iron, and magnesium form compounds of these elements and oxygen.

The chemical change illustrating the chief chemical property of oxygen is called combination. As in the case of decomposition, combination can be expressed by an equation. Thus: —

$$\text{Carbon} + \text{Oxide} = \underset{\text{(Carbon-Oxygen)}}{\text{Carbon Dioxide}}$$

**Combination** may be defined as a chemical change in which two or more elements or compounds combine to form a compound.

**16. Oxidation and Oxides.** — The special term *oxidation* is applied to those cases of combination in which oxygen combines with another element. Substances which furnish the oxygen are called oxidizing agents. Free oxygen and air are oxidizing agents, though the oxygen for oxidation is often provided by compounds of oxygen, especially those that yield oxygen readily, such as potassium chlorate. The compound formed by the union of oxygen and another element is called an **oxide** of that element. Thus, carbon forms carbon dioxide. Oxides of different elements are distinguished by placing

the name of the element (or a slight modification of it) before the word oxide, e.g. magnesium oxide, lead oxide, nitric oxide. Sometimes di-, or a similar numerical syllable, is prefixed to the word oxide, e.g. manganese dioxide, sulphur trioxide, phosphorus pentoxide. (See Part II, Exps. **7, 9.**)

**17. Oxidation and Combustion.** — During oxidation heat is liberated, and if the heat is intense, light is also produced. If oxidation is slow, as in the rusting of some metals, the temperature of the oxidizing substance may not rise appreciably, because the heat escapes about as fast as it is liberated. Sometimes the heat liberated during slow oxidation cannot escape readily, but accumulates, hastens the oxidation, and finally the temperature rises to such a point that the substance takes fire. Thus, oily rags carelessly thrown aside by painters, hay stored in a poorly ventilated barn, and coal kept a long time in the warm hold of a ship sometimes take fire without an apparent cause. Such fires, often unexpected and disastrous, are said to be due to spontaneous combustion, though they are simply cases of slow oxidation which becomes accelerated by accumulated heat. If oxidation is rapid or proceeds rapidly, heat is liberated quickly, the temperature rises suddenly, and the oxidizing substance burns, often with dazzling light. This rapid uniting with oxygen is called **combustion**. In ordinary language combustion means fire or burning. Substances like paper, wood, coal, and oil, which burn readily, are called combustible; those like water, sand, stone, brick, glass, and plaster, which do not burn at all, are called incombustible. As usually used in chemistry, the term *combustion* means rapid oxidation accompanied by heat and light. Oxygen is essential to ordinary combustion, and the gas is often

called a good supporter of combustion. If air is excluded from a fire, the fire goes out. When combustible substances burn, the carbon (of which they wholly or partly consist) unites with the oxygen of the air, thereby forming the invisible gas carbon dioxide, and the chemical change is attended by heat and light. Briefly, a burning substance is uniting rapidly with oxygen. But since air is only about one fifth oxygen (the remainder being chiefly nitrogen, which does not support combustion), combustion is less rapid and hence less vigorous in air than in oxygen. The temperature at which combustion takes place varies between wide limits. Some substances, like phosphorus and gasoline vapor, catch fire at a moderate temperature, while others do not burn until heated to extremely high temperatures. Each substance has its own **kindling temperature,** i.e. the temperature to which it must be heated before it will catch fire, though this temperature depends somewhat on the form of the substance. Application of this fact is seen in the use of paper and kindling wood in starting a fire in a stove.

The correct explanation of fire, burning, and combustion was first made by Lavoisier (1743–1794). For many years chemists had believed that all combustible substances contained a principle called phlogiston, and that when a substance burned, phlogiston escaped. Very combustible substances were thought to contain much phlogiston, and incombustible substances no phlogiston. Lavoisier, in 1775, proved by his own and others' experiments that phlogiston did not exist, and that ordinary combustion is a process of combination with "a certain substance contained in the air." Soon after he identified this substance as oxygen.

Lavoisier, in 1778, named the gas oxygen (from the Greek *oxus*, acid, and *gen*, the root of a verb meaning to produce), because he believed from his experiments that oxygen was necessary for the production of acids — a view now known to be incorrect.

**18. Relation of Oxygen to Life.** — Free oxygen is essential to all forms of animal life. If an animal is deprived of air, it dies. By respiration air is drawn into the lungs; here its oxygen is taken up by the blood, which distributes it to all parts of the body. This oxygen slowly oxidizes the tissues of the body (see Hemoglobin, Chapter XVII). By this slow oxidation waste products are formed and heat is supplied to the body. One of these waste products is carbon dioxide gas, which with other gases is exhaled from the lungs. New tissue is built up from the food we eat. The human body resembles a steam engine. In each, the oxygen of the air helps burn fuel largely composed of carbon. In the engine, the products escape through a chimney and the heat produced is used to form steam which moves parts of the machine; in the body, the products escape through the lungs and other organs and the heat keeps the body at the temperature at which it can best perform its functions. (Compare Food as a Source of Energy, Chapter XVII.)

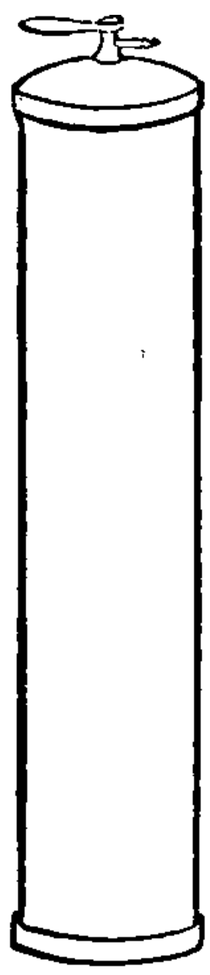

Fig. 2. — Oxygen Cylinder.

**19. Uses of Oxygen.** — Oxygen gas for industrial and scientific use is stored under pressure in strong metal cylinders (Fig. 2). A mixture of oxygen and hydrogen gas or acetylene gas if burned in a suitable apparatus produces a very hot flame. The oxy-hydrogen flame is used to melt certain metals and to produce the intense light of the stereopticon, while the oxy-acetylene flame finds application in welding and in burning apart heavy steel structures, e.g. girders of bridges (**26**, **195**). Oxygen gas is often administered to persons who are too ill or weak to inhale the ordinary volume of air, while liquid oxygen, on account of its low temperature and oxidizing power, is used in the treatment of cer-

THIS PAGE IS LOCKED TO FREE MEMBERS
Purchase full membership to immediately unlock this page

Get Smart

Over 2,000 years of human knowledge in 797,885 volumes

Instant access $8.99/month

Continue

*Fair usage policy applies

like a knapsack — the breathing bag on the chest (left) and the oxygen and can on the back (right). The course taken by the gases is shown by arrows. The supply of oxygen needed by the wearer (as well as the circulation of the gases) can be regulated by a valve on the cylinder (B); the nitrogen originally inhaled and in the apparatus at first is breathed over and over. The cylinder contains oxygen sufficient for about two hours. Some forms of apparatus have a mouth-breathing device instead of a helmet. Provided with an oxygen helmet (or similar device) a man can safely enter places where the air contains smoke or poisonous gas, and make repairs, extinguish fires, or rescue workmen who have been overcome. Extensive use is made of this protective device in mine disasters, largely through the efforts of the United States Bureau of Mines.

**20. Ozone** is a gas related to oxygen, though its properties differ. It is formed when electric sparks pass through the air, and is therefore produced when electrical machines are in operation and during thunder storms. Slow oxidation, especially of moist phosphorus, produces ozone.

## EXERCISES

**1.** Name several compounds from which oxygen can be prepared.

**2.** Summarize the physical properties of oxygen. What is its most characteristic chemical property?

**3.** If air contains a large proportion of another gas besides oxygen, how must the general properties of this other ingredient compare with those of oxygen?

**4.** Define and illustrate (*a*) oxidation, (*b*) oxide, (*c*) combustion, (*d*) oxidizing agent.

**5.** Give the name and symbol of each element mentioned in studying oxygen; also the name of each compound.

**6.** What general chemical change is involved in ordinary burning? What class of chemical changes is illustrated by (*a*) preparation of oxygen from mercuric oxide, (*b*) burning of sulphur in oxygen?

**7.** Cite cases of so-called spontaneous combustion of which you have heard or read. Suggest methods to prevent spontaneous combustion of (*a*) oily rags, (*b*) coal, (*c*) hay.

**8.** Suggest an experiment to show that air contains oxygen.

**9.** In which will a glowing piece of charcoal burn more vigorously, gaseous or liquid oxygen? Why?

**10.** What chemical part does oxygen take in (*a*) respiration, (*b*) burning, (*c*) combustion, (*d*) oxidation, (*e*) kindling a fire?

**11.** Essay topics: (*a*) Uses of oxygen. (*b*) Discovery of oxygen. (*c*) Priestley. (*d*) Oxygen and life. (*e*) Combustion. (*f*) Lavoisier.

## PROBLEMS

**1.** (*a*) What is the weight in gm. of 35 l. of oxygen gas? (*b*) Of 35,000 cc.? (*c*) Of 35 cubic decimeters?

**2.** How many grams does a cubic meter of oxygen gas weigh?

**3.** How many gm. of oxygen gas are there in a bottle holding 2.5 l. (at 0° C. and 760 mm.)?

**4.** A pupil prepared enough oxygen gas to fill a tank holding 1 cu. m. at 0° C (and 760 mm.). How many gm. were prepared?

**5.** (*a*) How many liters (at 0° C, and 760 mm.) will 25 gm. of oxygen gas occupy? (*b*) How many gm. will 25 l. of oxygen weigh?

**6.** How many kg. of oxygen gas (at 0° C. and 760 mm.) are needed to fill a tank measuring 250 m. × 550 m. × 1055 m.?

**7.** How many gm. of oxygen gas (at 0° C. and 760 mm.) in a cylindrical gas holder which is 1 m. high and 30 cm. in diameter?

**8.** If air contains 23 per cent of oxygen by weight, how many liters of oxygen gas (at 0° C. and 760 mm.) can be obtained from 800 gm. of air?

**9.** If air contains 21 per cent of oxygen by volume, how many gm. of oxygen gas can be extracted from 950 l. of air?

**10.** A pupil prepared five bottles of oxygen each holding 250 cc. (at 0° C. and 760 mm.). How many gm. of oxygen were prepared?

**11.** Water contains 88.82 per cent of oxygen. Suppose .5 kg. was decomposed, how many liters of oxygen (at 0° C. and 760 mm.) were formed?

**12.** Water contains 88.82 per cent of oxygen. Suppose 200 liters of oxygen (at 0° C. and 760 mm.) have been obtained; how many gm. of water were decomposed?

**13.** A room is 10 m. long, 5 m. wide, and 4 m. high. How many gm. of water, containing 88.82 per cent of oxygen, must be decomposed to furnish enough oxygen (at 0° C. and 760 mm.) to fill the room?

**14.** Potassium chlorate contains 39.18 per cent of oxygen. If 35 gm. are heated, how many bottles each containing 250 cc. can be filled with the liberated oxygen?

# CHAPTER III

## HYDROGEN

**21. Preparation.** — Hydrogen is readily prepared from acids. This is accomplished by allowing certain metals and acids to interact. The metals usually employed are zinc, iron, or magnesium, and the acids are dilute water solutions of sulphuric acid or hydrochloric acid. The hydrogen comes from the acid, and the metal combines with the rest of the acid to form a compound which usually remains dissolved in the apparatus. In the laboratory hydrogen is usually prepared in a small generator, and collected over water in a pneumatic trough. On a large scale a Kipp apparatus (Fig. 4) is sometimes used. No flame should be near during the preparation, because mixtures of air and hydrogen explode violently when ignited. (See Part II, Exps. **10, 12 A** and B.)

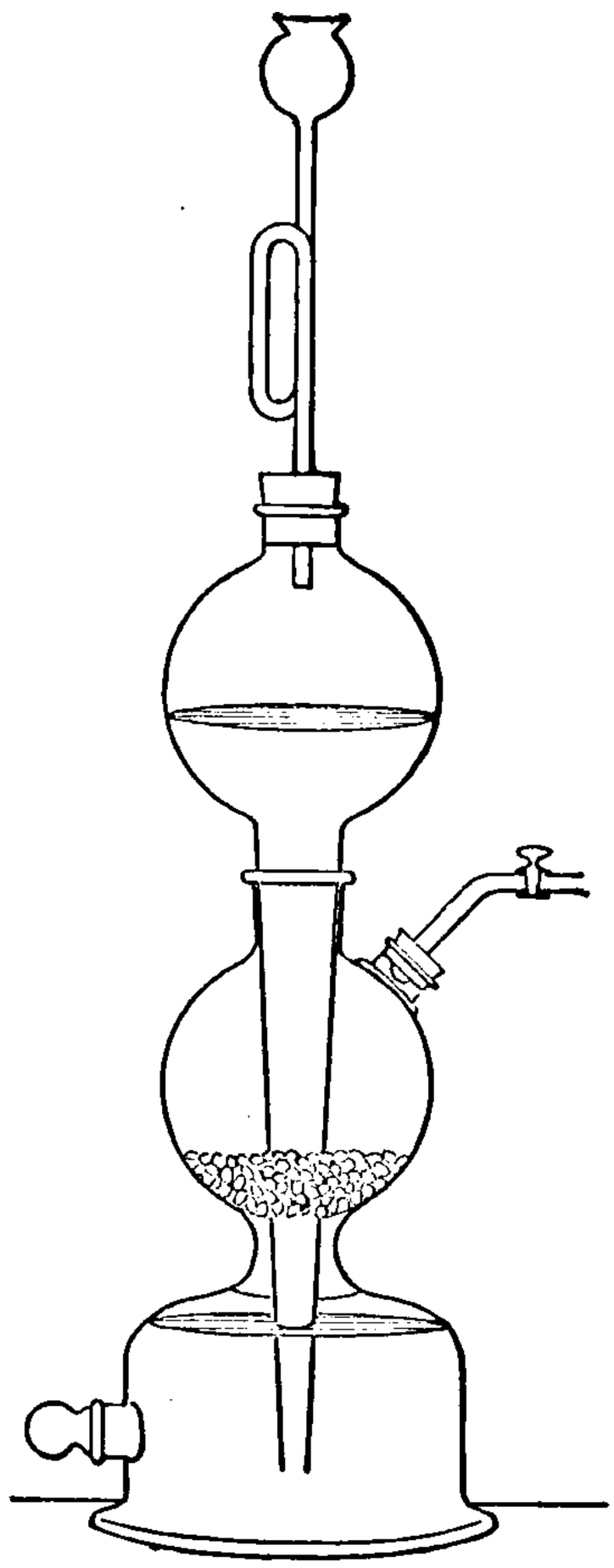

Fig. 4.—Kipp Apparatus for Generating Hydrogen.

Hydrogen can be obtained from water by allowing certain metals and water to interact. If a small piece of sodium is dropped upon cold water, the sodium melts into a shining globule, which spins about rapidly on the water with a hissing sound, and finally disappears with a slight explosion. Calcium inter-

acts slowly with water, but potassium interacts so rapidly that the heat ignites the liberated hydrogen (Fig. 5). (See Part II, Exp. **12 D** and **E.**)

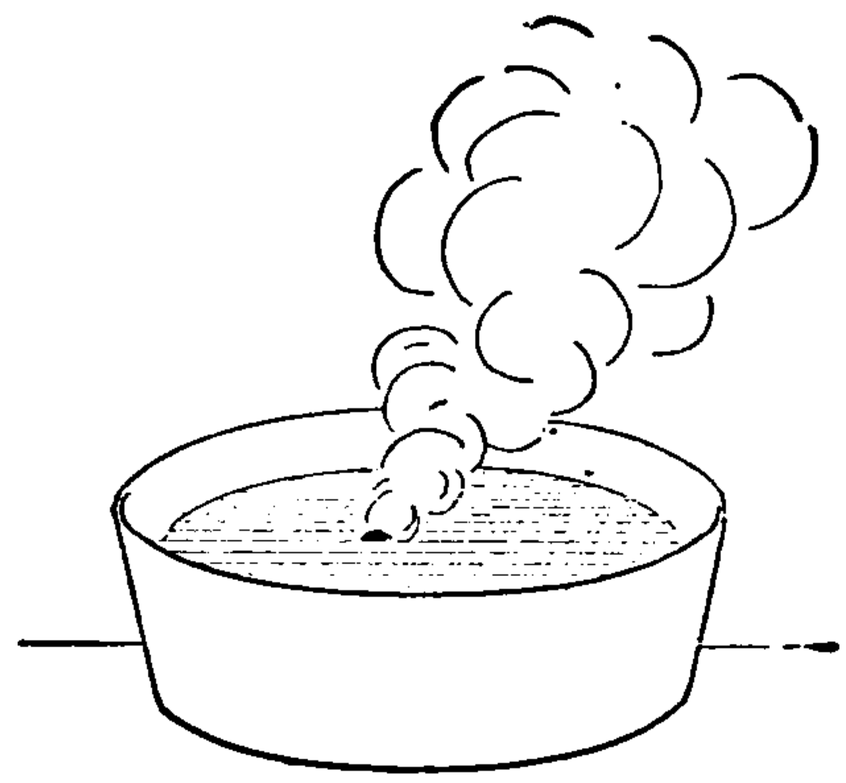

Fig. 5. — Interaction of Water and Potassium.

Hydrogen, together with oxygen, is liberated from water by passing a current of electricity through water containing a little sulphuric acid (**54** 1). Hydrogen can also be prepared by passing steam — the gaseous form of water — over heated metals (Fig. 6). This experiment was first performed by Lavoisier, in 1783, while he was studying the composition of water. He passed steam through a red-hot gun barrel containing

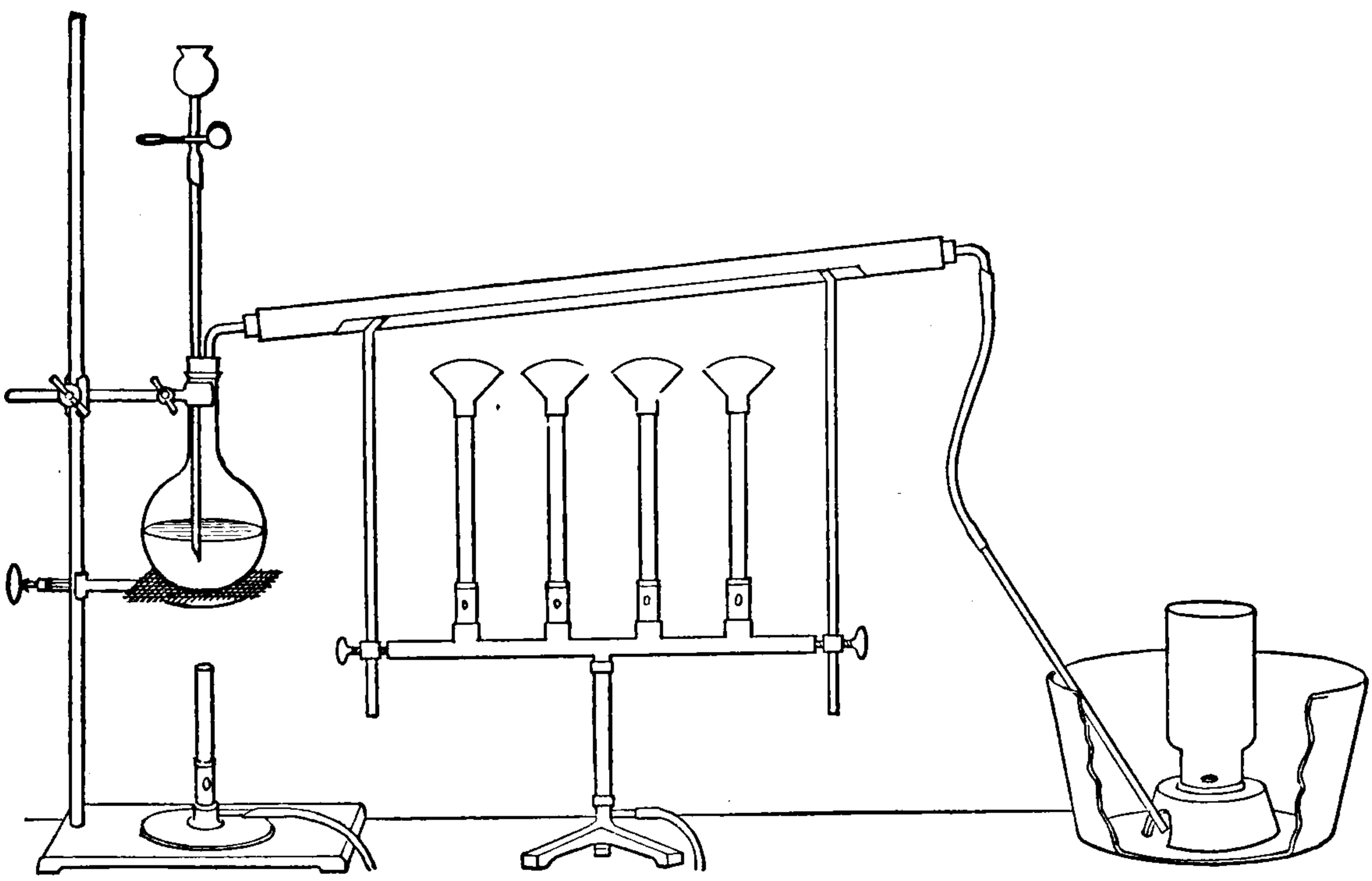

Fig. 6. — Modern Form of Lavoisier's Apparatus for Showing the Formation of Hydrogen by the Interaction of Steam and Heated Iron.

bits of iron. The oxygen of the steam combined with the iron, and the hydrogen escaped from the tube. Since Lavoisier was then studying the composition of water

and not especially the properties of hydrogen, he naturally thought of this gas as essential for forming water. So he gave the gas the name hydrogen, which means literally "water former."

Hydrogen can also be prepared by boiling solutions of certain bases with metals, e.g. sodium hydroxide with aluminium. (See Part II, Exp. **12 C.**)

**22. Chemical Changes illustrated by the Preparation of Hydrogen.** — The preparation of hydrogen by the interaction of a metal and an acid illustrates a third kind of chemical change, viz. substitution, or, as it is sometimes called, displacement or replacement. In the case of zinc and sulphuric acid, the hydrogen is displaced from the acid and the zinc takes its place; i.e. zinc is substituted chemically for hydrogen. This chemical change can be expressed by the following equation:—

Zinc + Sulphuric Acid = Hydrogen + Zinc Sulphate
(Hydrogen-Sulphur-Oxygen) (Zinc-Sulphur-Oxygen)

We might define **substitution** as a chemical change in which one element replaces another in a compound.

**23. Physical Properties.** — Hydrogen has no taste or color. The pure gas has no odor, though hydrogen as ordinarily prepared has a disagreeable odor, due mainly to impurities in the metals used. Hydrogen is the lightest known substance. One liter of hydrogen at 0° C. and 760 mm. weighs only .0898 gm. Volume for volume hydrogen is about one fourteenth as heavy as air and one sixteenth as oxygen. Pure hydrogen is not poisonous. Hydrogen is not very soluble in water, but it is absorbed by several metals, especially palladium. The absorption of gases by metals is called **occlusion.** Hydrogen diffuses readily; i.e. it quickly passes through porous substances,

mixes rapidly with other gases, and freely escapes into space in all directions. Hydrogen has been liquefied and solidified. Both liquid and solid are colorless and transparent.

**24. Chemical Properties.** — The chief chemical property of hydrogen is the readiness with which it unites with some elements, especially oxygen and chlorine, whether these elements are free or constituents of compounds. Hydrogen burns in air and in oxygen with an almost invisible but very hot flame. A platinum or copper wire held in the flame quickly becomes red-hot. If a small, dry, cold bottle is held over the flame, moisture is deposited inside the bottle. Water is the product of the combustion of hydrogen.

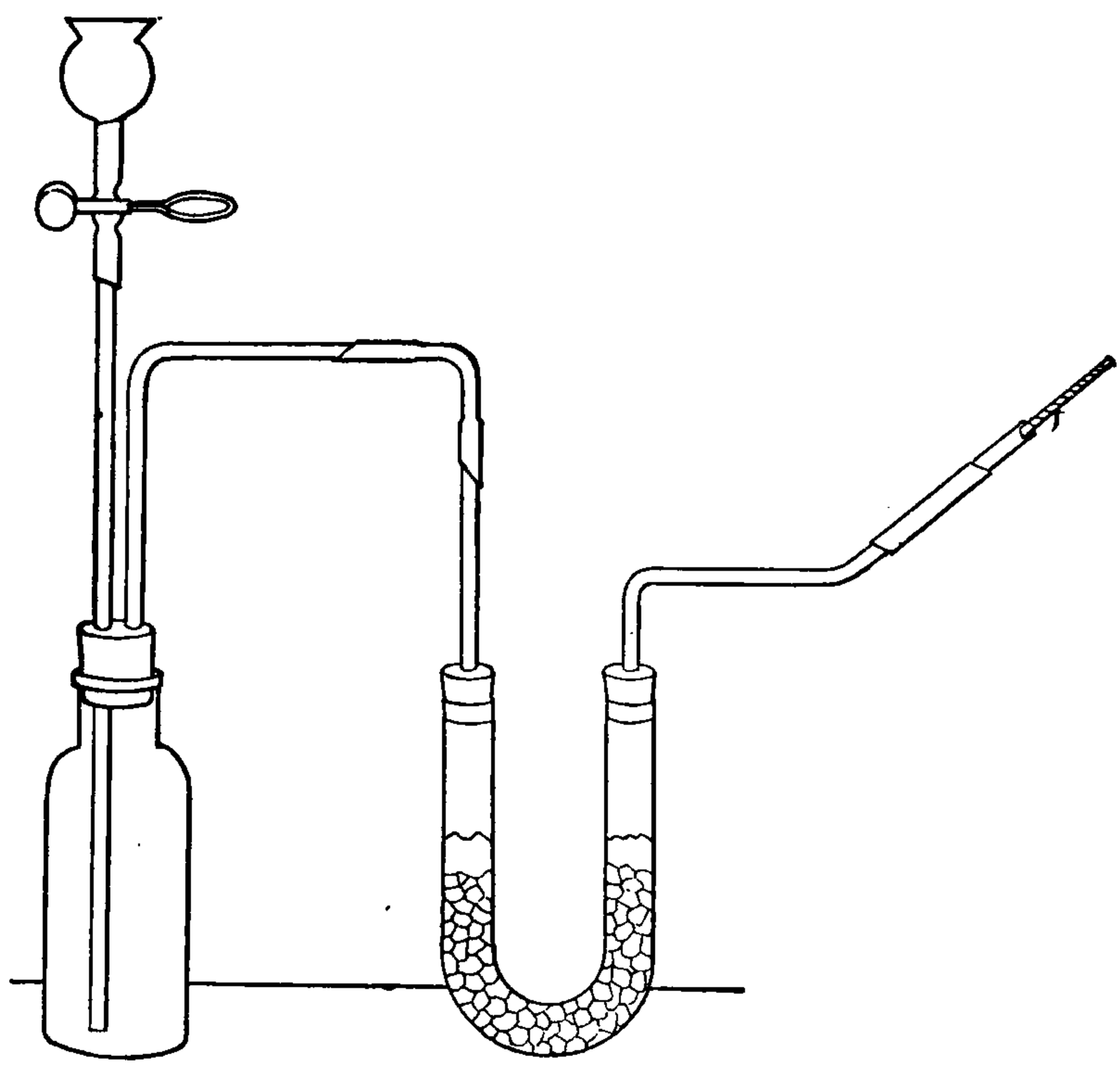

Fig. 7.—Apparatus for Burning Hydrogen.

The burning of hydrogen and the properties of the hydrogen flame can be shown readily by experiment. Hydrogen is generated, as usual, and passed through a U-tube containing calcium chloride to remove the water vapor (Fig. 7). After all the air has been driven out of the apparatus by the hydrogen, the gas is lighted at the exit. Unusual precautions must be used to avoid an explosion, and before the experiment is performed the directions should be looked up (see the author's Descriptive Chemistry, page 472, and Experimental Chemistry, page 340).

The film of water that may be seen on the bottom of a vessel placed over a lighted gas range or a Bunsen burner is the condensed vapor formed by the burning hydrogen and hydrogen compounds of the illuminating gas. Organic substances containing hydrogen, such as wood and paper, when burned, yield water as one of their products.

The chemical change that occurs in the burning of hydrogen can be expressed thus:—

$$\text{Hydrogen} + \text{Oxygen} = \underset{\text{(Hydrogen-Oxygen)}}{\text{Water}}$$

It is an example of combination and also of oxidation; the two elements combine to form a compound, and moreover one of the elements (the hydrogen) undergoes oxidation.

Although a small jet of hydrogen burns quietly in air or oxygen, a mixture of hydrogen and air burns so rapidly that the combustion is practically an explosion. Therefore, the air should be fully expelled from the apparatus in which hydrogen is being generated and all leaky joints should be tightened before the gas is collected; no flames, large or small, should be near. Neglect of these precautions has caused serious accidents.

Hydrogen not only combines energetically with free oxygen, but it also withdraws oxygen from compounds. This chemical removal of oxygen is called **reduction,** and the substances that remove the oxygen are called reducing agents. Hydrogen is a vigorous reducing agent, just as oxygen is an energetic oxidizing agent. When oxides of certain metals are heated in a current of hydrogen, the oxygen of the oxide is chemically removed and combines with the hydrogen to form water; the metal is left uncombined. Thus, by heating copper oxide in hydrogen,

THIS PAGE IS LOCKED TO FREE MEMBERS
Purchase full membership to immediately unlock this page

HISTORY

Tens of thousands of important historical sources, many previously unobtainable, are now available for the first time with a Forgotten Books Full Membership.

Unlimited Access
$8.99/month

Continue

*Fair usage policy applies

hydrogen; the gases are forced out of these small openings by the pressure maintained in the storage tanks. The flame is used to melt platinum. When the flame strikes against a piece of lime, the latter becomes intensely bright. Thus used, it is called the lime or calcium light, and is often employed in operating the stereopticon.

**27. Occurrence of Hydrogen.** — Combined with oxygen, it forms water — its most abundant compound. With carbon, it forms hydrocarbons, which are ingredients of natural gas, illuminating gas, and the products from petroleum (e.g. kerosene, gasoline, and paraffin). With carbon and oxygen, it forms a large number of compounds vitally connected with plants and animals, such as starch, sugar, and fat. With nitrogen it forms the familiar compound, ammonia; and with sulphur, the bad smelling gas, hydrogen sulphide. Hydrogen is also an essential constituent of all acids and bases.

## EXERCISES

**1.** Name several substances which contain hydrogen. Suggest a method of obtaining hydrogen gas from them.

**2.** Compare oxygen and hydrogen.

**3.** How can hydrogen be distinguished from oxygen?

**4.** Summarize the physical properties of hydrogen. What is its characteristic chemical property?

**5.** Why is there danger of an explosion in generating hydrogen? How can the danger be avoided?

**6.** Define and illustrate (*a*) reduction and (*b*) reducing agent. Are the terms deoxidize and reduce synonymous?

**7.** Describe the oxy-hydrogen blowpipe. State the use.

**8.** In using hydrogen for balloons, what property of the gas might cause disaster?

**9.** What chemical change occurs when hydrogen burns in air?

## PROBLEMS

**1.** Sulphuric acid contains 2.04 per cent of hydrogen. (*a*) How many gm. must be decomposed to yield 85 liters of hydrogen (at 0° C. and 760 mm.)? (*b*) 85 cc.? (*c*) How many liters of hydrogen gas (at 0° C. and 760 mm.) can be prepared from 750 gm. of sulphuric acid? (*d*) How many cc. of gas?

**2.** Hydrochloric acid contains 2.74 per cent of hydrogen. How many gm. must be decomposed to yield (*a*) 44 liters of hydrogen (at 0° C. and 760 mm.)? (*b*) 44 cc.? (*c*) How many cc. of gas (at 0° C. and 760 mm.) can be made from 70 gm. of the acid? (*d*) How many liters of gas?

**3.** Water contains 11.18 per cent of hydrogen. How many cubic centimeters of hydrogen gas (at 0° C. and 760 mm.) can be prepared from 230 gm.? How many liters?

**4.** (*a*) How many liters (at 0° C. and 760 mm.) will 45 gm. of hydrogen gas occupy? (*b*) How many grams will 45 liters weigh?

**5.** A vessel is 1 m. long, 20 cm. wide, and 2.5 dm. high. How many grams of hydrogen gas (at 0° C. and 760 mm.) will it contain?

**6.** A room is 10 m. long, 10 m. wide, and 7 m. high. (*a*) How many gm. of hydrogen (at 0° C. and 760 mm.) will fill it? (*b*) How many kilograms?

**7.** A student prepared enough hydrogen gas (at 0° C. and 760 mm.) to fill six bottles, each holding 250 cc. How many gm. were prepared?

**8.** A cylindrical tank 1 m. long and 25 cm. in diameter is filled with hydrogen (at 0° C. and 760 mm.). How many gm. does the gas weigh?

**9.** A German hydrogen manufactory produces daily 19,000 cubic meters of gas. (*a*) Express this volume in liters and in cc. (*b*) What would this volume weigh, if measured at 0° C. and 760 mm.?

**10.** One of the Zeppelin balloons (recently destroyed) had a capacity of 351,150 cubic feet. What weight of hydrogen was needed to fill it? (Assume 1 cu. m. = 35.32 cu. ft.; also that the volume of hydrogen was measured at 0° C. and 760 mm.)

# CHAPTER IV

## SOME PROPERTIES OF GASES — WEIGHT OF A LITER OF OXYGEN

**28. Introduction.** — Gases behave quite uniformly with changes in temperature and pressure. In this chapter we shall study the effect of changes of temperature and pressure upon the volume of a gas.

**29. Relation of Gas Volumes to Temperature and Pressure.** — The actual volume occupied by a gas depends upon the temperature and pressure prevailing at the time of observation. A gas expands with rise of temperature or with decrease of pressure; it contracts with fall of temperature or with increase of pressure. The normal or standard temperature at which gases are measured is zero degrees on the centigrade thermometer (or briefly 0° C.), and the normal or standard pressure is the pressure indicated by the barometer when the mercury column is 760 millimeters high (or briefly 760 mm.). Under these conditions, which are called **standard conditions,** a liter of oxygen gas weighs 1.429 gm. But at another temperature or pressure the liter would contain a different quantity of oxygen gas, and would therefore have a different weight. For example, if the pressure is increased, the volume becomes less, more gas must be added to bring the volume up to a liter, and this second liter of oxygen would weigh more than 1.429 gm. That is, a liter vessel, when full, always contains a liter, but the weight of the contents varies with the quantity of

gas contained in this volume. Clearly, if we wish to find the weight of a given volume of a gas or to compare the weights of gases by means of their volumes, as we often do in chemistry, we must know the conditions under which the volume is measured. If all gases could be measured at 0° C. and 760 mm., their volumes would be comparable, and the weights deduced or obtained directly from these volumes would be a true measure of the actual quantity of the gases in the observed volumes. But it is inconvenient to measure gases experimentally at 0° C. and 760 mm. So it is customary to measure the volume under the conditions existing at the time of the experiment, and then reduce the observed volume to the volume it would occupy under standard conditions.

**30. Relation of Gas Volumes to Changes in Temperature.** — If a gas at 0° C. is heated to 1° C., it expands 1/273 of its volume; heated to 5° C., or to 25° C., or to 100° C., it expands 5/273, or 25/273, or 100/273, and so on. Similarly, if it is cooled from 0° C. to − 1° C., it contracts 1/273, and so on. We can state these relations between temperature and volume in another way. If we let 273 represent the volume of the gas at 0° C., then its volumes at the temperatures given above would be represented by 274, 278, 298, 373, 272 respectively, and similarly for other temperatures. This regularity of behavior is shown by all gases, and may be stated thus: *All gases under constant pressure expand or contract equally for equal change of temperature.* General statements like this, which summarize related facts, are called laws. This law is known as the **law of Charles** from the man (Charles, 1746–1822) who proposed it.

The application of the law of Charles to the reduction of a gas volume to the volume it would occupy at 0° C. can be readily under-

stood by an example. Suppose 10 liters of oxygen gas at 15° C. are to be reduced to the volume it would occupy at 0° C. Let the volume at 0° C. be represented by 273; then the volume at 15° C. would be represented by 273 + 15. But 273 + 15 and 273 are in the same ratio as 10 (the known volume at 15° C.) and X (the unknown volume at 0° C.). Therefore we can state these relations in a proportion, thus: —:

$$273 + 15 : 273 :: 10 : x; \quad x = 9.479 \text{ liters.}$$

Therefore 10 liters of oxygen at 15° C. would occupy 9.479 liters at 0° C. The mathematical operation of finding the volume a gas would occupy at 0° C. is called reducing to standard temperature or correcting for temperature. Since t can be substituted for any temperature (above or below 0° C.), the general form of the proportion can be written: —

$$273 + t : 273 :: \text{known vol.} : \text{vol. at } 0° \text{ C.}$$

**31. Relation of Gas Volumes to Changes in Pressure.** — It is found by experiment that *the volume of a gas at a constant temperature is inversely proportional to the pressure.* This statement is the **law of Boyle,** because it was first announced by Boyle (1626–1691) about 1660. Boyle's law means that the greater the pressure, the less the volume, and *vice versa.* The normal pressure, as stated above, is 760 mm. Gases, as a rule, are collected and confined over water or some other liquid whose surface is exposed to the atmosphere, and since atmospheric pressure is transmitted through the liquid to the gas, the pressure which the gas is under is found by reading the pressure recorded by the barometer at the time the gas volume is read. The reduction of the observed volume to the volume it would occupy at 760 mm. is performed by applying Boyle's law.

An illustration will make the application clear. Suppose we have 10 liters of oxygen gas at 775 mm. and wish to know its volume at

760 mm. According to Boyle's law, gas volumes are inversely proportional to the pressures; i.e. the observed pressure bears the same relation to the normal pressure as the normal volume bears to the observed volume. Applying these relations to the illustration, we have the proportion: —

$$775 : 760 :: x : 10; \quad x = 10.197 \text{ liters.}$$

The mathematical operation of finding the volume a gas would occupy at 760 mm. is called reducing to standard pressure or correcting for pressure.

**32. Behavior of Gas Volumes under Simultaneous Changes in Temperature and Pressure.** — It is immaterial whether a gas is subjected to changes in temperature and then to changes in pressure or to both at once. Heat and pressure act independently. Hence, a gas volume can be corrected for temperature and pressure by a single calculation. Thus, if the observed volume is 10 liters, the temperature 15° C., and the pressure 775 mm., the condensed formula is: —

$$X = 10 \times 273/(273 + 15) \times 775/760; \quad X = 9.666 \text{ liters}$$

Reduction of gas volumes to standard conditions may be accomplished by substituting the observed values in the following equation and solving for V.

$$V = \frac{V'P'}{760\,(1 + (.00366 \times t))}$$

In this equation, V = corrected volume, V′ = observed volume, P′ = observed pressure, t = observed temperature. (The method of deriving this equation is given in the author's Experimental Chemistry, pp. 361–363.)

**33. Weight of a Liter of Oxygen Gas.** — As already stated (**12**), the weight of a liter of oxygen gas is 1.429 gm. at 0° C. and 760 mm. This value (1.429) is found by an experiment involving several steps. (*a*) Oxygen is

generated from a mixture of potassium chlorate and manganese dioxide, and the weight liberated is found by subtracting the weight of the oxygen generator after the experiment from its original weight; suppose the weight of liberated oxygen is 2.322 gm. (*b*) The oxygen is collected, its volume noted, and the temperature and pressure also read; suppose the volume of oxygen is 1.75 l., the temperature 19° C., and the pressure 755 mm. (*c*) The observed volume is reduced to the volume at standard conditions, thus: — $1.75 \times 755/760 \times 273/293 = 1.625$. (*d*) The weight of one liter at 0° C. and 760 mm. is then found to be 1.429 gm. by dividing 2.315 (the weight of the oxygen) by 1.625 (the corrected volume of the oxygen), thus: — $2.322 \div 1.625 = 1.429$. (See Part II, Exp. **13**.)

## EXERCISES

**1.** State Boyle's law. Illustrate it.

**2.** State Charles's law. Illustrate it.

**3.** Give examples of (*a*) expansion and of (*b*) contraction of gases caused by change of temperature.

**4.** Apply Exercise 3 to change of pressure.

**5.** Describe (*a*) a centigrade thermometer and (*b*) a barometer. (For (*a*) see App., § 2.)

**6.** Explain the expression "a gas is under standard conditions."

**7.** When a given volume of gas is reduced to standard conditions, is the weight of the gas changed? Is the gas itself reduced to 0° C. and 760 mm.?

**8.** From the data given in **33**, calculate the weight of a liter of oxygen without making the correction for temperature and pressure. Compare the result with the correct weight.

**9.** Write a brief essay on Boyle's contributions to science.

## PROBLEMS

**1.** Reduce the following to the volume occupied at 760 mm.: (*a*) 20 cc. at 745 mm.; (*b*) 45 cc. at 765 mm.; (*c*) 450 cc. at 755 mm.; (*d*) 1.5 l. at 763 mm.; (*e*) 2.5 l. at 745 mm.; (*f*) 500 cc. at 75 cm.; (*g*) 76 cc. at 76 cm.; (*h*) 900 l. at 749 mm.

THIS PAGE IS LOCKED TO FREE MEMBERS
Purchase full membership to immediately unlock this page

Get Smart

Over 2,000 years of human knowledge in 797,885 volumes

Instant access $8.99/month

Continue

*Fair usage policy applies

# CHAPTER V

## PROPERTIES OF WATER

**34. Occurrence in Nature.** — Water is always present in the atmosphere as vapor. In the liquid state water occurs in vast quatities. The soil and plants contain considerable. Many common foods consist largely of water (see tables, Chapter XVII). The human body is nearly 70 per cent water. (See Part II, Exps. **14, 25.**)

**35. Natural Waters.** — Water is never found pure in nature. Even rain water, which is usually regarded as the purest natural water, contains material washed from the atmosphere. Surface and underground water dissolves substances from the rocks and soil. Water containing certain calcium and magnesium compounds is hard, but in soft water, such as rain water, these compounds are absent (**249, 423**).

**36. River water** contains the impurities brought by underground and surface water; it is also often polluted by decaying animal and vegetable matter or by refuse from manufactories. **Ocean water** contains a large proportion of common salt. Other substances are present, especially compounds of magnesium and calcium. The peculiar taste of ocean water is due to the presence of these substances.

**37. Drinking Water.** — The water of many cities is purified by filtering it on a large scale through layers of

sand and gravel (Fig. 9). Such a filter removes bacteria almost completely, though it must be frequently cleaned. Sometimes the water is stored in a large settling basin or tank and purified before filtration by adding alum or a similar substance, which causes the suspended matter to settle. Ozone (**20**) and bleaching powder (**78**) are used as purifiers in some localities. (See Part II, Exp. **207.**)

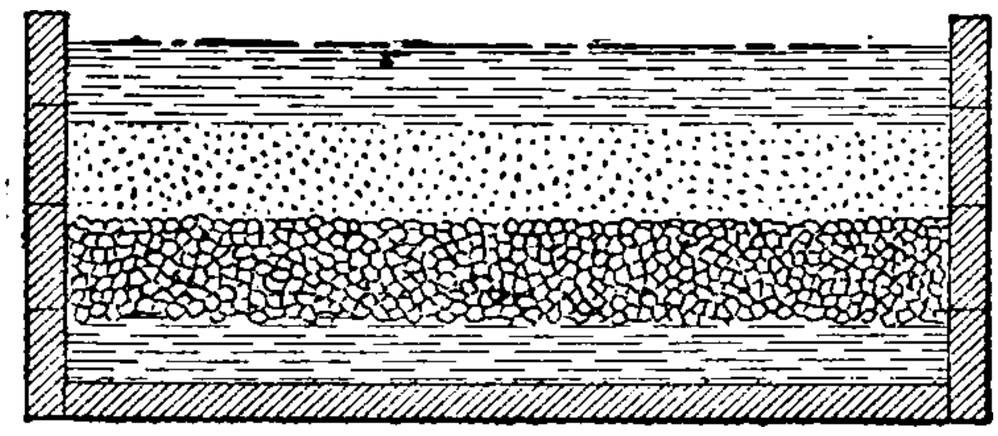

Fig. 9. — Section of a Sand Filter showing Impure Water (top), Sand, Gravel, and Filtered Water.

**38. The purity of drinking water** is found by a chemical and microscopic examination of a sample, supplemented by a rigid sanitary inspection of the source of supply.

Water can be purified by **distillation.** This operation is often performed in the laboratory in a condenser, which is shown in Fig. 10 arranged for use. The condenser consists of an outer tube A A′, provided with an inlet and an outlet for a current of cold water,

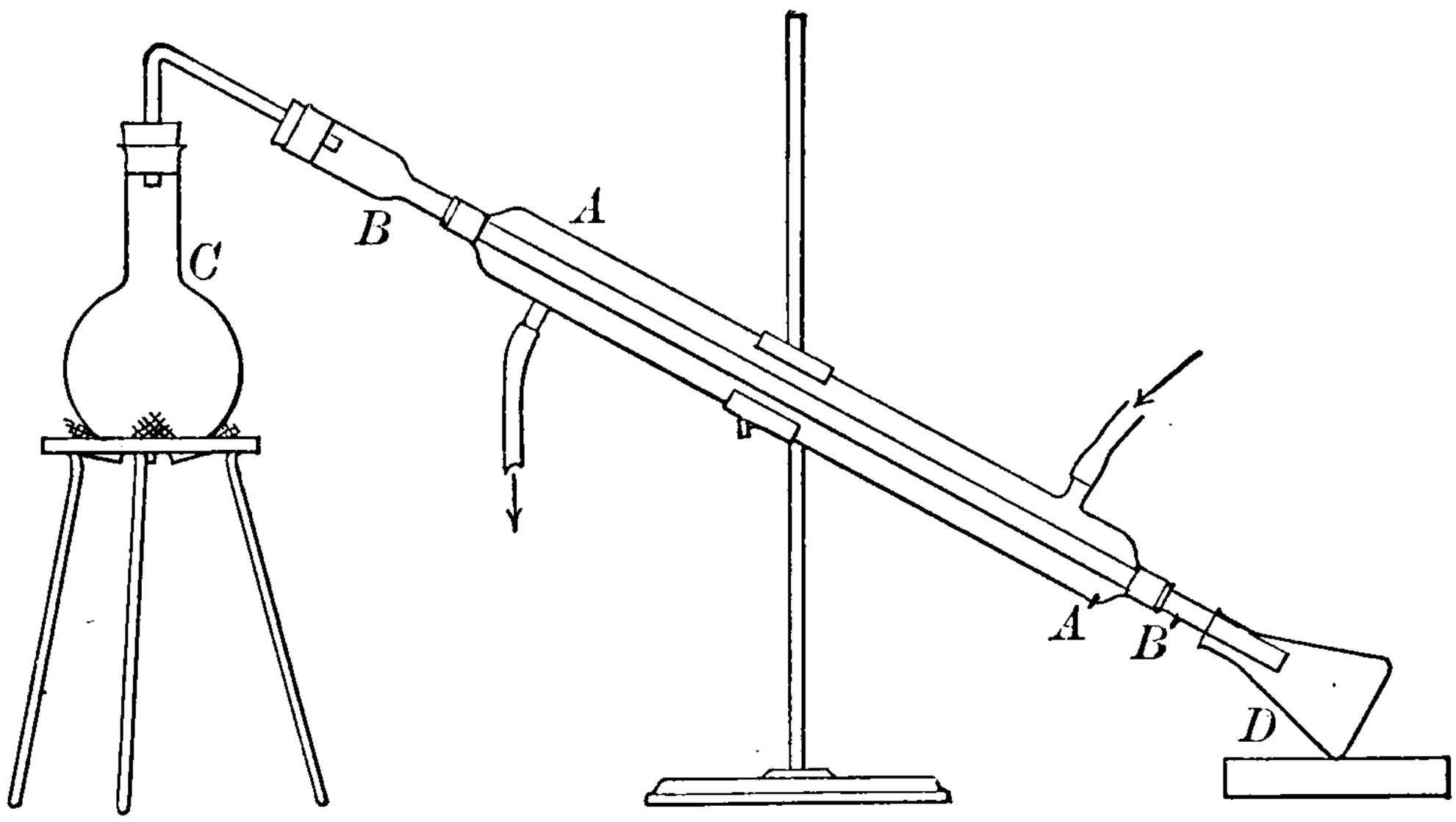


Fig. 10. — Condenser.

which surrounds the inner tube B B′. The vapor from the water boiling in the flask C condenses in the inner tube, owing to the decrease in temperature, and drops off the lower end of this tube, as the distillate, into the receiver D, while the impurities remain behind in the flask. (See Part II, Exp. **26.**) Other forms of

condensers are used (Fig. 11). Cold water enters the condenser at the lower inlet and is kept level in the chamber by the upper outlet. The chamber is heated, and the steam in passing down through the condenser drops off the lower end as distilled water. Distilled water is prepared on a large scale by boiling the water in a metal vessel and condensing the vapor in a block tin pipe coiled around the inside of a vessel through which a current of cold water is flowing (Fig. 12). Distilled water is used in the chemical laboratory to prepare many solutions.

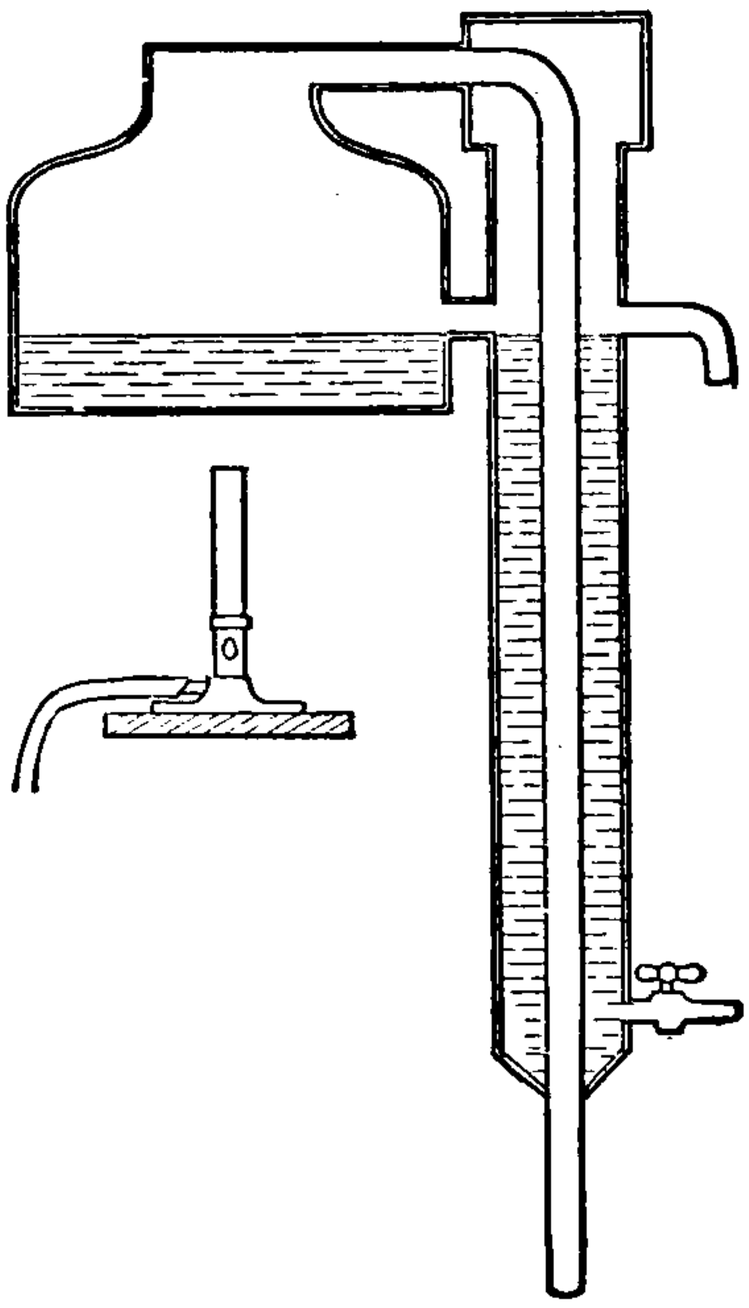

Fig. 11. — Apparatus for Distilling Water.

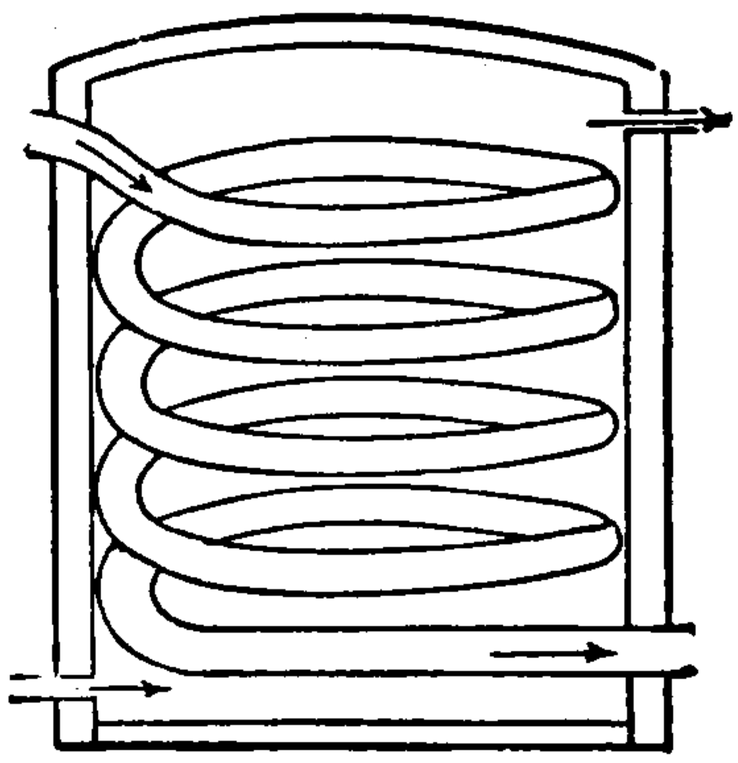

Fig. 12. — Coiled Pipe Condenser.

**39. Physical Properties of Water.** — At ordinary temperatures pure water is a tasteless and odorless liquid. It is usually colorless, but thick layers are bluish. Water is a poor conductor of heat. (See Part II, Exp. **15.**)

Water solidifies or freezes at 0° C. (or 32° Fahrenheit). When water freezes, it expands about one tenth of its volume. Hence ice floats. The specific gravity of ice is about 0.92.

The pressure exerted by water when it freezes is powerful. Vessels or pipes completely filled with water often burst when the water freezes. It is an erroneous but popular idea that "thawing out" a pipe bursts it. As a matter of fact, ice contracts when it melts. Pipes crack as soon as the water freezes, and when the ice melts, a channel is left for the water to flow out of the pipe.

Ice melts at 0° C. (32° F.), which is also the freezing point of water. Ice often crystallizes in forming, but in-

dividual crystals are seldom visible except during the first stages of the process. Snow crystals are common (Fig. 13). They are always six-sided or six-pointed, and are formed in the atmosphere by the freezing of water vapor.

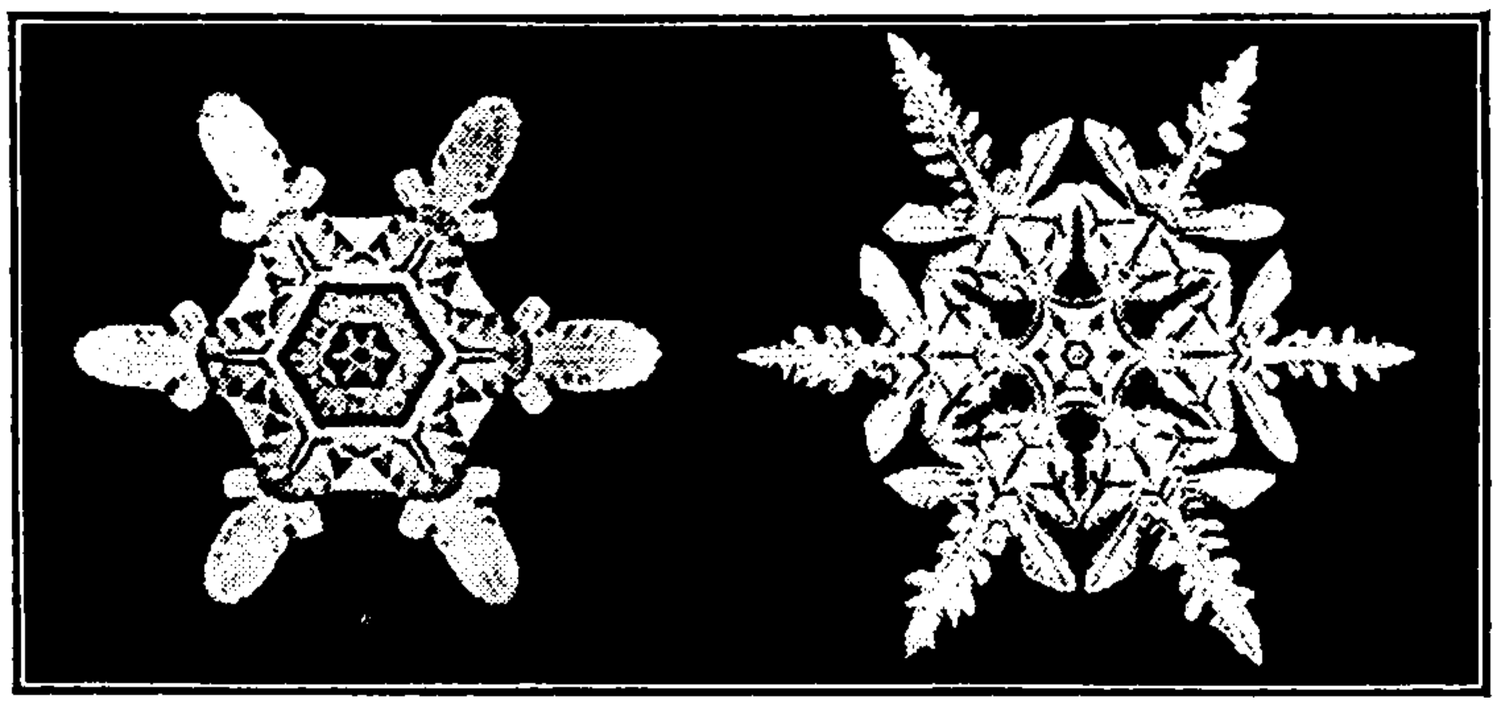

Fig. 13. — Snow Crystals. (From a photograph by Wilson A. Bentley.)

**40. Vapor Pressure.** — Water evaporates at all temperatures. If water is heated in an open vessel, the vapor escapes rapidly until the thermometer reaches 100° C. (or 212° F.). At this point water boils, i.e. it changes rapidly into vapor without rise of temperature. This vapor, if allowed to escape into the atmosphere, cools and condenses quickly into a cloud of minute drops of water. This cloud is popularly called **steam.**

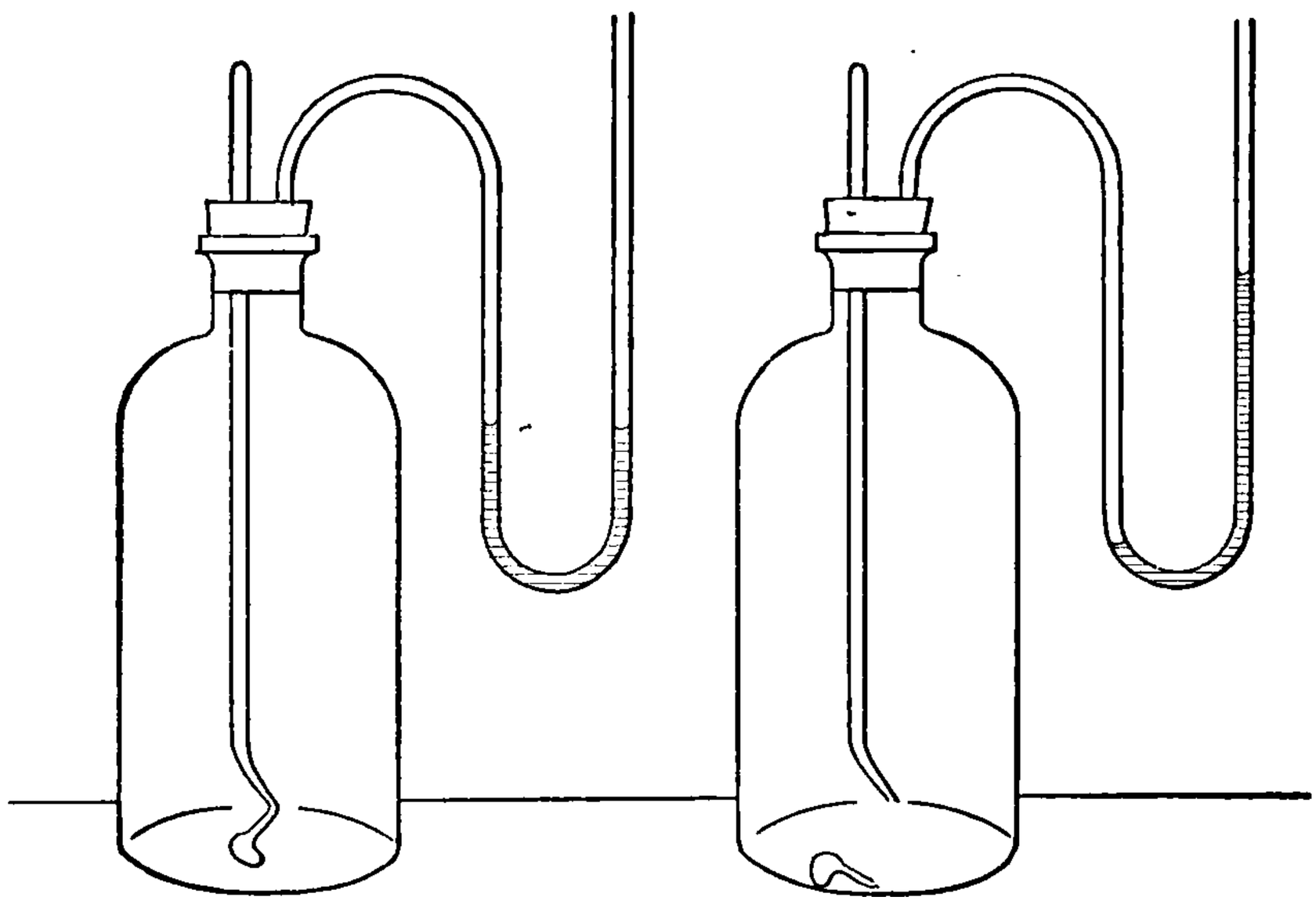

Fig. 14. — Experiment to Illustrate Vapor Pressure.

The water vapor that escapes from the surface of water produces pressure, which is called **vapor pressure.** This fact may be illustrated by the apparatus shown in Fig. 14. If a

little water is introduced into the dry bottle (left) by pushing down the tube that contains water in the bulb, the colored liquid in the U-shaped tube will indicate a pressure inside the bottle (right). The pressure of water vapor depends solely on the temperature. This is readily seen by comparing the heights of the mercury in the barometer tubes shown in Fig. 15. In the tube A there is no water vapor in the space above the mercury, and the height of the mercury is 760 mm. In B the space above the mercury is filled with water vapor at 20° C.; the vapor exerts a pressure and forces the mercury down to nearly 742 mm. That is, water vapor at 20° C. exerts a pressure equal to about 18 mm. of mercury. Similarly, in C the space is filled with water vapor at 50° C. and the mercury is forced down to 678 mm., the water vapor exerting a pressure of about 82 mm. If the vapor were at 100° C. the vapor pressure would be 760 mm. The latter value is instructive, for it means that at the boiling point of water (100° C.) the vapor pressure just balances the normal and opposing atmospheric pressure. The pressure exerted by water vapor depends solely, as shown above, on the temperature of the evaporating water, and has a maximum value for each temperature. These values have been carefully determined by experiment, and can be found in the Table of Vapor Pressure given in the Appendix, § 4.

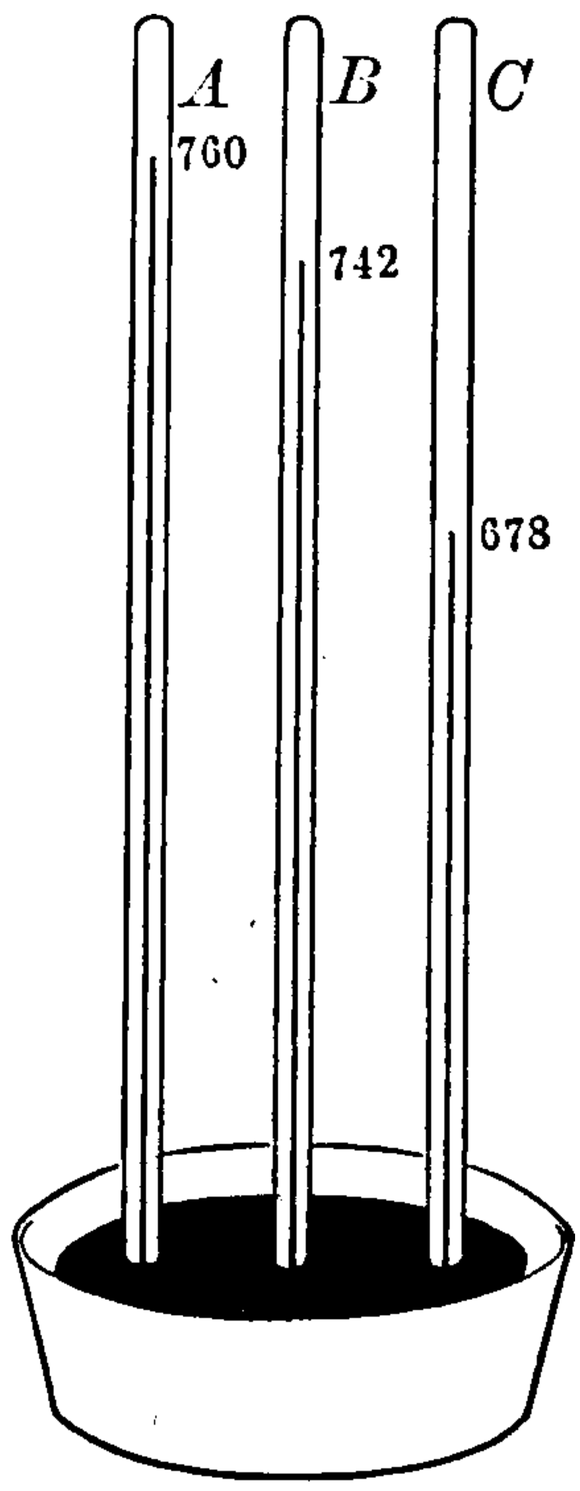


Fig. 15.—Experiment to show the Relation between Vapor Pressure and Temperature.

A practical application of vapor pressure is made in finding accurately the weight of a liter of oxygen and in similar experiments where gases are measured over water. The oxygen gas is collected in a bottle or graduated tube inverted in a vessel of water. If the gas is allowed to stand confined over the water long enough, it becomes saturated with water vapor; i.e. the tube finally contains a mixture of oxygen and the maximum amount of water vapor at

the given temperature. In such a mixture, each gas shares the total atmospheric pressure. Hence the actual pressure exerted by the oxygen is found by subtracting the pressure of the water vapor from the total pressure (indicated by the barometer). The latter method is used, because the pressure of water vapor at any temperature is known and can be taken directly from the table. Incorporating this fact into the formula given in Chapter IV for reducing the volume of a gas to its volume at 0° C. and 760 mm. the formula becomes —

$$V = \frac{V' (P' - a)}{760 (1 + (.00366 \times t))}$$

In this formula V means the volume of dry oxygen at 0° C. and 760 mm., and *a* means the vapor pressure (found in the table in the Appendix, § 4).

**41. Chemical Properties of Water.** — Water at ordinary temperatures interacts with certain metals, especially calcium, sodium, and potassium (**21**). Magnesium and zinc interact with boiling water, and iron with steam (Fig. 6). Water is decomposed to some extent into its component elements (oxygen and hydrogen) by intense heat; at about 2000° C. the decomposition is less than 2 per cent. As the temperature falls, the elements recombine to form water. Water combines directly with many oxides. Thus, lime, which is calcium oxide, combines directly with water and forms a compound called calcium hydroxide; this chemical change is attended by considerable heat. Similarly, sulphur dioxide forms sulphurous acid. These chemical changes may be represented thus: —

Calcium Oxide + Water = Calcium Hydroxide
(Calcium-Oxygen) (Calcium-Hydrogen-Oxygen)

Sulphur Dioxide + Water = Sulphurous Acid
(Sulphur-Oxygen) (Sulphur-Hydrogen-Oxygen)

Such oxides are sometimes called **anhydrides.** Water combines with certain solids when they separate from a solution by crystallization. Thus, from a solution of copper sulphate blue crystals are obtained, which when heated give off water and crumble to a gray white powder (see Water of Crystallization, **49**).

**42. Solvent Power of Water.** — This is one of the most conspicuous properties of water. Only the simpler aspects are treated in this chapter. More extended discussion may be found in Chapter XIV.

The clear, transparent liquid containing a dissolved substance is called a **solution.** The liquid in which the substance dissolves is called the **solvent,** and the dissolved substance is called the **solute.** Substances differ widely in their solubility. A solution which contains a small proportion of solute is called a **dilute solution**; one containing a large proportion of solute is called a **concentrated solution.** Sometimes the terms *weak* and *strong* are used instead of dilute and concentrated. Other solubility terms are defined below (**45**).

**43. Solutions of Gases.** — Water dissolves many gases. The solubility varies widely. Some, like ammonia, are very soluble, while others, such as oxygen and hydrogen, are only slightly soluble. As a rule, the solubility of a gas decreases with rise of temperature. Pressure influences the solubility of gases. Thus, large quantities of carbon dioxide gas are forced into cylinders full of water in preparing soda water. When the pressure is decreased by opening the valve, the gas escapes rapidly and causes the soda water to froth or foam; bubbles caused by escaping carbon dioxide may also be seen when the stopper is removed from a bottle containing a charged beverage. This rapid escape of gas is called **effervescence.** Underground

THIS PAGE IS LOCKED TO FREE MEMBERS
Purchase full membership to immediately unlock this page

HISTORY

Tens of thousands of important historical sources, many previously unobtainable, are now available for the first time with a Forgotten Books Full Membership.

Unlimited Access
$8.99/month

Continue

*Fair usage policy applies

TABLE OF THE SOLUBILITY OF SOLIDS IN WATER

| Solids | Number of Grams in Solution in 100 Grams of Water | |
|---|---|---|
| | 20° C. | 100° C. |
| Calcium Chloride | 74.5 | 159.0 |
| Calcium Hydroxide | .165 | .077 |
| Magnesium Sulphate | 36.2 | 73.8 |
| Potassium Dichromate | 13.0 | 102.0 |
| Potassium Nitrate | 31.6 | 246.0 |
| Sodium Chloride | 36.0 | 39.8 |

expressed by such terms as *insoluble*, *slightly soluble*, or *very soluble*. It is more accurate to represent the amount of solvent by 100 gm.; on this basis the solubility of a solid becomes the number of grams of solid dissolved by 100 gm. of water. (See Part II, Exps. **19, 27.**)

**46. Solubility Curves.** — The table of solubilities just given is limited to two temperatures. A more complete way of representing the solubility of a substance is by a **solubility curve.** The curves of several substances are shown in Fig. 16. The temperature is read from the vertical lines and the number of grams of solute in 100 gm. of water from the horizontal lines. For example, if we wish to know the temperature at which 40 gm. of potassium chlorate are held in solution by 100 gm. of water, it is only necessary to find where the horizontal line numbered 40 cuts the potassium chlorate curve, and then follow the vertical line down to the temperature number, where 80° C. is found.

**47. Solution and Crystallization.** — If hot solutions are cooled or concentrated solutions are evaporated, the solute separates from the solvent in crystals; the process of obtaining them is called **crystallization.** The shape and color of the crystals are characteristic of the particular substance and serve to identify it. Thus, common salt crystallizes in white cubes. (See Part II, Exp. **20.**)

**48. Supersaturated Solutions.** — Crystals are not always deposited as just stated. Thus, a hot, very concentrated solution of some solids, such as sodium sulphate

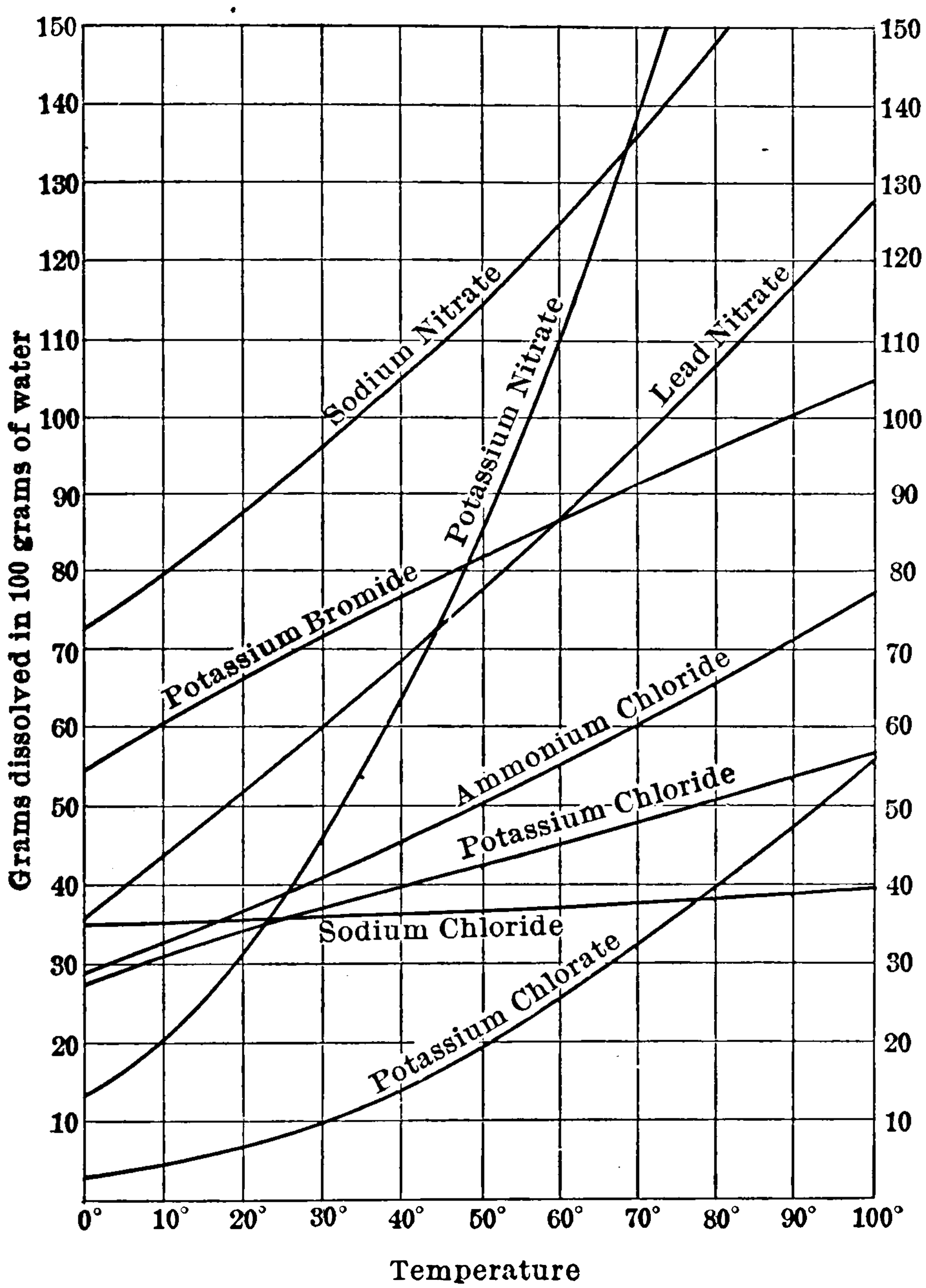


Fig. 16. — Solubility Curves.

and sodium thiosulphate, deposits no crystals when the *clear* solution cools. Solutions which contain more solute than is needed for normal saturation are called **supersaturated.** Supersaturation can occur only when the undissolved solid is absent. If a fragment of the solid is dropped into the supersaturated solution, crystals very

soon begin to form upon the fragment. (See Part II, Exp. **28.**)

**49. Solution and Water of Crystallization.** — Crystals of some substances deposited from solutions contain water which is an essential part of the compound. The combined water must not be confused with water which adheres to a crystal or is inclosed in it. Crystals containing combined water are dry even after the crystals are powdered. The combined water can be removed by heat or sometimes merely by exposure to air. Loss of water is usually attended by loss of color and always by loss of crystalline appearance. Thus, blue crystallized copper sulphate loses color slowly at ordinary temperatures and very rapidly when heated, finally becoming a gray powder. The proportion of combined water in crystals is constant in the same compound, but in different substances the proportion varies between wide limits. Water chemically combined in a crystal and readily removed in a definite proportion by heating is called **water of crystallization.** Compounds containing water of crystallization are sometimes called **hydrates** or hydrated compounds. Conversely, compounds which have been deprived of water of crystallization are said to be **anhydrous** or dehydrated. For example, blue crystallized copper sulphate is a hydrate of the compound copper sulphate, but after the blue compound has been heated, it becomes anhydrous or dehydrated copper sulphate, which is a gray powder. Anhydrous compounds often readily become hydrated again. Thus, when the gray anhydrous copper sulphate is added to water, a blue solution is produced from which blue crystals of hydrated copper sulphate are readily obtained. (See Part II, Exps. **21, 22.**)

**50. Efflorescence.** — Some substances lose their water

of crystallization wholly or in part by exposure to air. This property is called **efflorescence,** and such substances are said to be efflorescent or to effloresce. Crystals of washing soda, alum, and borax effloresce readily. (See Part II, Exp. **23.**)

An explanation of efflorescence is found in the principle of vapor pressure. Substances containing water of crystallization exert a vapor pressure. If this vapor pressure is greater than the pressure of the water vapor in the atmosphere, the substance loses water until the vapor pressures are equal or until all the water has escaped from the substance.

**51. Deliquescence.** — Many substances absorb water when exposed to air, become moist, and sometimes even dissolve in the absorbed water. Calcium chloride, potassium carbonate, zinc chloride, sodium hydroxide, magnesium chloride, and potassium hydroxide belong to this class. This property is called **deliquescence** and the substances are said to deliquesce, or to be deliquescent. Deliquescence is a property of very soluble substances. (See Part II, Exp. **24.**)

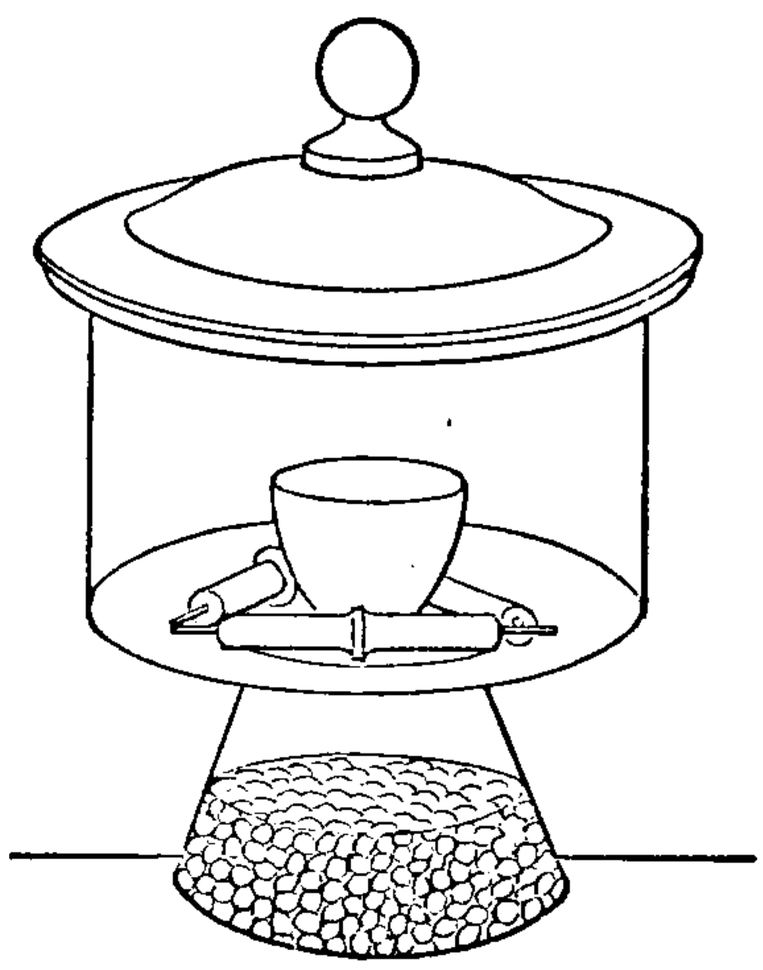

Fig. 17. — A Desiccator.

Deliquescence can be explained thus: Water vapor from the air condenses on the surface of the solid and produces a very concentrated solution, which has a vapor pressure much lower than the average pressure of the water vapor in the air; the solution, therefore, continues to take up water until its vapor pressure equals the pressure of the water vapor in the air. Common salt often deliquesces, especially in damp weather, owing to small quantities of magnesium and calcium chlorides which are present as impurities. The property of deliquescence is utilized in the laboratory to dry substances, calcium chloride being often employed for this purpose. One form of apparatus used is called a desiccator (Fig. 17).

## EXERCISES

**1.** Why is sea water salt?

**2.** Essay topics: (*a*) Purification of drinking water. (*b*) Distillation. (*c*) Water as an erosive agent. (*d*) Crystals. (*e*) Vapor pressure. (*f*) Chemical properties of water.

**3.** Define and illustrate (*a*) water of crystallization, (*b*) efflorescence, (*c*) deliquescence, (*d*) anhydrous, (*e*) dehydrated.

**4.** Define and illustrate (*a*) solution, (*b*) solvent, (*c*) solute, (*d*) dilute, (*e*) concentrated, (*f*) unsaturated solution, (*g*) saturated solution, (*h*) supersaturated solution, (*i*) solubility, (*j*) solubility curve.

**5.** How might sea water be rendered suitable for drinking?

**6.** Practical topics: (1) How would you prove a liquid is pure water? (2) What conditions are favorable for (*a*) evaporation, (*b*) efflorescence, (*c*) deliquescence? (3) Suggest experiments (*a*) to find the solubility of a solid in water at 40° C., (*b*) to show that water from a crystal is not water of crystallization, (*c*) to find the per cent of water in a potato.

## PROBLEMS

**1.** Find the volume of the dry gas at 0° C. and 760 mm. in: (*a*) 80 cc. at 750 mm. and 17° C.; (*b*) 80 cc. at 745 mm. and 19° C.; (*c*) 100 cc. at 765 mm. and 17.5° C.; (*d*) 97 cc. at 757 mm. and 20.5° C.

**2.** Plot the following data on cross section paper and draw the solubility curve of the substance: Temperature — 0, 10, 20, 30, 40, 50, 55; corresponding solubility (i.e. number of gm. soluble in 100 gm. of water) — 13, 21, 31, 45, 64, 86, 100.

**3.** If the density of ice is 0.92, what volume will a liter of water at 4° C. occupy when frozen?

**4.** By use of the solubility curves in Fig. 16 answer the following: (*a*) How many gm. of sodium chloride are in solution at 20°, 30°, 55°, 65°, 0°, 100°? (*b*) At what temperatures are 60 gm. and 95 gm. of potassium bromide in solution? (*c*) Compare the solubility of sodium nitrate and sodium chloride. How much of each is in solution at 20°, 25°, 30°?

**5.** Calculate the per cent of water of crystallization in each crystallized substance from the following: (*a*) 5 gm. of aluminium sulphate lose 2.43 gm. on heating; (*b*) 7 gm. of calcium sulphate lose 1.464 gm.; (c) 3 gm. of cadmium nitrate lose .7 gm.; (*d*) 3 gm. of cobalt nitrate lose 1.113 gm.

# CHAPTER VI

## COMPOSITION OF WATER — HYDROGEN DIOXIDE

Water is a compound of hydrogen and oxygen. That is, its constituents are the elements hydrogen and oxygen, and they are chemically combined in a fixed ratio.

**52. The Composition of a Compound** is determined either by analysis or synthesis, i.e. by taking it apart, directly or indirectly, or by putting its parts together. Sometimes both methods are used.

Composition may be studied qualitatively and quantitatively. A qualitative experiment aims to discover what elements or groups of elements constitute a compound. A quantitative experiment is an accurate determination of the proportion, by weight or volume, of the constituents of a compound.

**53. Qualitative Composition of Water.** — The fact that water contains the elements hydrogen and oxygen can be shown in several ways. (1) Metals such as calcium, sodium, and iron liberate hydrogen from water and form simultaneously compounds containing oxygen (**21**). (2) When an electric current is passed through an acid solution of water, hydrogen and oxygen are liberated (**54** 1). (3) Water is produced when hydrogen is burned in air or in oxygen (**24**).

The fact that sodium forms an oxygen compound, viz. sodium hydroxide, by interaction with water can be readily shown by experiment. If red litmus paper is put into the water from which the sodium has liberated hydrogen, the litmus paper becomes blue. This change of color

from red to blue shows that a base is in the water, because bases turn red litmus paper blue. The base can be obtained as a white solid by evaporating the water. If a little of the solid is heated in the flame, the persistent, intense yellow color imparted to the flame proves that the white solid is a sodium compound. Further tests could be applied to show that it belongs to the class of compounds called hydroxides. Sodium hydroxide is a compound of sodium, hydrogen, and oxygen, and is formed by replacing half of the hydrogen of water by sodium.

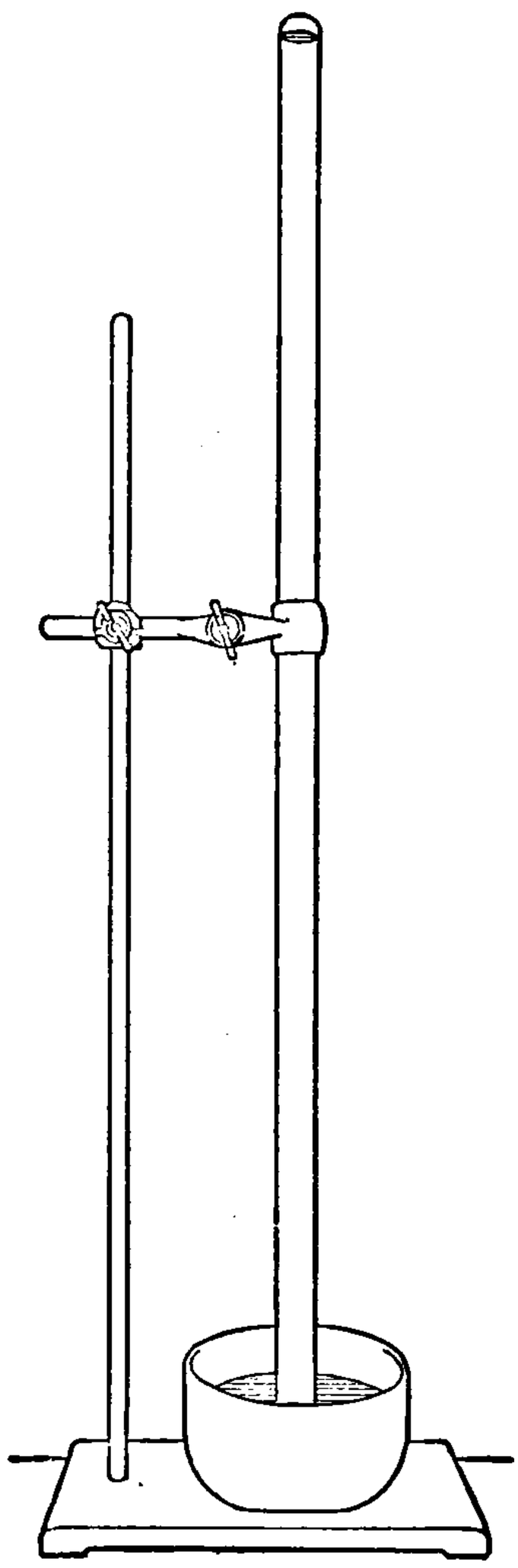

Fig. 18.—Preparing Oxygen from Chlorine Water.

A simple experiment shows directly that oxygen is a chemical constituent of water, viz. the exposure of chlorine water to sunlight. (Chlorine water is prepared by saturating water with chlorine gas — an element to be studied in Chapter IX.) A tube about a meter long and closed at one end is completely filled with chlorine water, the open end is immersed in a vessel containing some of the same solution, and the whole apparatus is placed in the direct sunlight. Bubbles of gas soon appear in the liquid, and after a few hours a small volume of gas collects at the top of the tube (Fig. 18). If the tube is closed (by the thumb or finger), removed, and inverted, the gas will rise to the open end, where it can be shown to be oxygen by the usual test, viz. relighting a glowing joss stick or splint of wood. (See Part II, Exp. **29.**)

**54. The Quantitative Composition of Water.** — The quantitative composition of water is obtained by a de-

THIS PAGE IS LOCKED TO FREE MEMBERS
Purchase full membership to immediately unlock this page

Get Smart

Over 2,000 years of human knowledge in 797,885 volumes

Instant access $8.99/month

Continue

*Fair usage policy applies

2. Synthesis. An accurate determination can be made by exploding a mixture of known volumes of hydrogen and oxygen in a eudiometer.

A simple sketch of a convenient form of apparatus is shown in Fig. 20. The essential part is the eudiometer F. In this glass tube the gases are accurately measured and exploded. The electric spark that causes the explosion is obtained from an induction coil and battery. The spark leaps across the space between the platinum wires at the top of the eudiometer, and the heat produced by the spark causes the hydrogen and oxygen to combine and form water. Omitting details, oxygen and hydrogen are introduced separately into the eudiometer, measured, and exploded. The quantity of water formed by the union of the hydrogen and oxygen is too minute to measure. The most accurate experiments give the ratio 2.0027 to 1, but as usually stated two volumes of hydrogen combine with one volume of oxygen to form water.

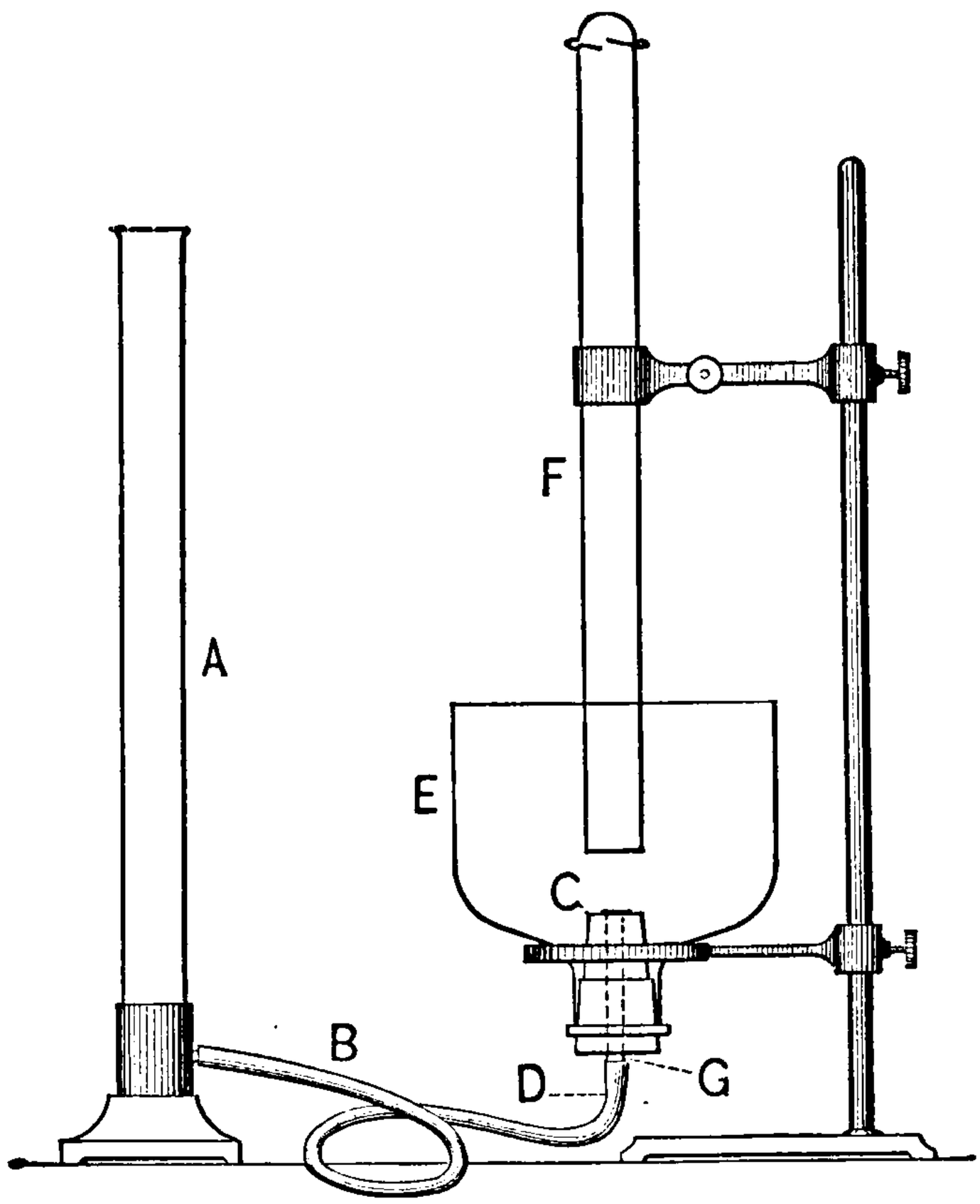

Fig. 20. — Apparatus for Determining the Volumetric Composition of Water.

The **gravimetric composition of water** has been accurately determined by synthesis. The apparatus is shown in Fig. 21. It was first weighed vacuous (i.e. free from air or other gases). The tubes *aa* were then connected

with the weighed reservoirs of oxygen and hydrogen, and the oxygen was introduced. Sparks were next passed between the platinum wires *cc*, and the heat ignited the hydrogen, which was slowly admitted, the combination of the gases taking place at *bb*. The water vapor condensed in the tube *dd*, the lower portion of which was immersed in cold water. The combustion of the hydrogen was continued until a suitable weight of water was formed. The water and its vapor were then converted into ice by putting the apparatus into a freezing mixture; the residual mixture of gases was drawn off and analyzed, passing in its exit through tubes of phosphorus pentoxide in *ee* which retained all traces of water. The whole apparatus was finally weighed, the increase being the weight of the water formed by the combination of known weights of hydrogen and oxygen. As the result of exceptionally careful experiments the ratio of hydrogen to oxygen by weight was found to be 1 to 7.9395. The complete synthesis was made in 1895 by Morley.

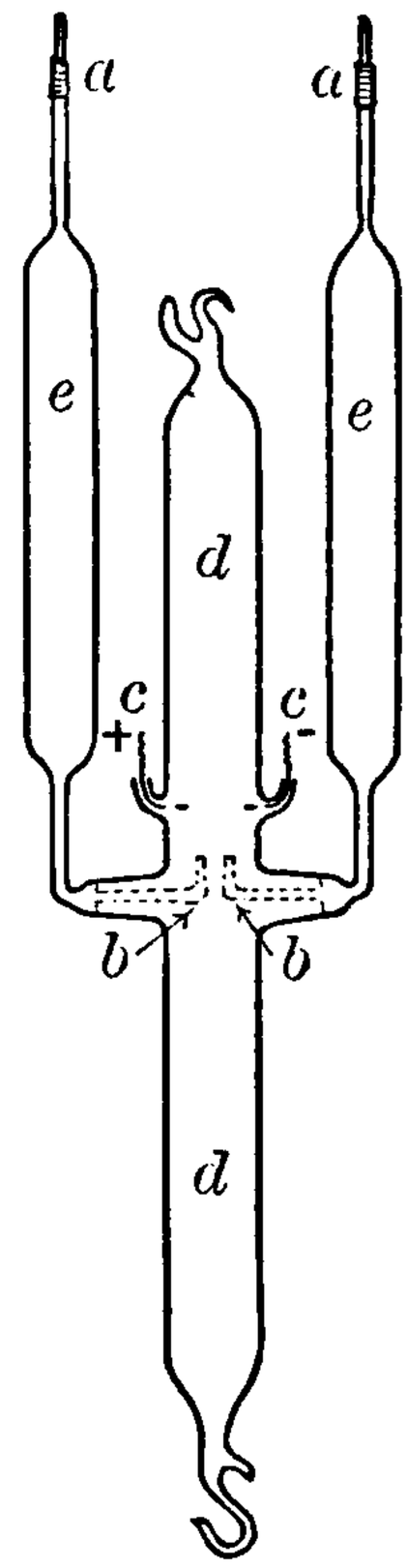


Fig. 21.—Morley's Apparatus for Determining the Gravimetric Composition of Water.

**55. Summary.** — Experiment shows that water consists of hydrogen and oxygen combined in a fixed ratio by weight, viz. 1 to 7.9395; they are also combined in the ratio of 2.0027 to 1 by volume. Usually these ratios are stated approximately as 2 to 16 by weight and 2 to 1 by volume. Sometimes the gravimetric composition of water is stated in per cent, the values being 11.18 per cent hydrogen and 88.82 per cent oxygen.

## EXERCISES

**1.** Can water be correctly called "hydrogen oxide"? Why?

**2.** What does Lavoisier's experiment (**21**) show about the composition of water?

**3.** How is the electrolysis of water accomplished? What does it show about the composition of water?

**4.** Compare the volumetric and the gravimetric composition of water.

**5.** What does the burning of hydrogen prove about the composition of water?

## PROBLEMS

**1.** Suppose 15 gm. of water are decomposed. What weight of (*a*) oxygen and (*b*) hydrogen is produced? What volume (at 0° C. and 760 mm.) of (*c*) oxygen and (*d*) hydrogen?

**2.** What volume of oxygen (at 0° C. and 760 mm.) must be used to unite with 175 gm. of hydrogen to form water?

**3.** What volume of hydrogen (at 0° C. and 760 mm.) must be used to convert 175 gm. of oxygen into water?

**4.** A mixture of 500 cc. of oxygen and 1250 cc. of hydrogen (both at 0° C. and 760 mm.) is exploded. What weight of water is formed?

**5.** 50 cc. of oxygen are mixed with 500 cc. of hydrogen, both measured at the normal temperature and pressure. An electric spark is passed through the mixture. What volume, if any, of gas will remain, and how would you ascertain whether it is hydrogen or oxygen?

### Hydrogen Dioxide

**56. Hydrogen Dioxide** is composed of hydrogen and oxygen. But the proportion of the components is not the same as in water. It contains approximately two parts of hydrogen and thirty-two of oxygen by weight. It is often called **hydrogen peroxide.** The ordinary commercial solution contains about three per cent of hydrogen dioxide. It has a sharp, pungent odor, and a bitter, metallic taste. The solution is somewhat unstable, and decomposes slowly into water and oxygen.

It is used to bleach human hair, ostrich feathers, fur, silk, wool, cotton, bone, and ivory, and as an antiseptic in dentistry and surgery.

# CHAPTER VII

## LAW AND THEORY — LAWS OF DEFINITE AND MULTIPLE PROPORTIONS — ATOMIC THEORY — ATOMS AND MOLECULES — SYMBOLS AND FORMULAS

**57. Law and Theory.** — We discover facts by observation and experiment. Facts which always occur under the same conditions soon become well established. Related facts are often summarized in a brief general statement called a **law.** The explanation we give of facts, especially groups of related facts, is called a **theory.**

Laws and theories are of great service in chemistry, since they help us gather into intelligible statements our knowledge of a vast number of related facts. They also help us to discover new facts and interpret phenomena.

**58. Law of the Conservation of Matter.** — Experiment shows that in a chemical change the total weight of the matter involved is not altered. Substances are transformed, but the weight of the substances entering into a chemical change equals the weight of the substances resulting from the chemical change. This feature of chemical change may be summed up by the **law of the conservation of matter,** which is preferably stated thus: —

*No weight is lost or gained in a chemical change.*

**59. Law of Constant Composition.** — It has been shown by experiment that water contains 88.82 per cent oxygen and 11.18 per cent hydrogen (**55**). Similar experiments show that in all chemical compounds the different constituents are present in a definite and constant proportion by weight. This general fact may be stated in the

form of a law, called the **Law of Constant Composition** or the **Law of Definite Proportions,** thus: —

*A given chemical compound always contains the same elements in the same proportions by weight.*

(See Part II, Exp. **32.**)

This law is one of the fundamental laws of chemistry. It was established as the outcome of a controversy between two French chemists, Proust (1755–1826) and Berthollet (1748–1822). Subsequent experiments by the Belgian chemist Stas (1813–1891) and the American chemist Richards (1868–) have firmly established our belief in the accuracy of this law.

**60. Law of Multiple Proportions.** — The composition of compounds is usually expressed in per cent; but in the case of a series of compounds percentage reveals nothing about multiple relations. If, however, a fixed weight of one constituent is adopted as a basis of comparison, and the composition of the series of compounds is expressed in terms of this weight, then the simple multiple relation which exists between the weights of the other constituent (or constituents) may be clearly seen. Thus, no multiple relation is apparent in the statement that the two compounds of carbon and oxygen contain respectively 27.27 and 42.85 per cent of carbon and 72.72 and 57.14 per cent of oxygen. But if we adopt 1 (or any other number) as the weight of carbon in each compound, the weights of oxygen will be in the simple ratio of 2 to 1; i.e. the weight of oxygen in one compound is a simple multiple of its weight in the other. Similar results may be worked out with other series of compounds.

The general fact of multiple proportions is expressed as the **Law of Multiple Proportions,** thus: —

*When two (or more) elements unite to form a series of compounds, a fixed weight of one element always combines*

*with such weights of the other element (or elements) that the ratio between these different weights can be expressed by small whole numbers.*

**61. The Atomic Theory.** — The theory that explains the facts summarized in the laws just discussed is called the **atomic theory.** It was proposed by Dalton, an English chemist, about 1805. According to this theory, (1) an element is made up of a vast number of very small particles called atoms; (2) atoms of the same element have the same weight; (3) atoms of different elements differ from each other in weight; (4) chemical change is the union, separation, or exchange of undivided atoms. The atomic theory means in a few words that matter is composed of atoms, which remain undivided in chemical changes. By means of the atomic theory, many facts about substances and chemical change can be made very much clearer.

**62. Atoms and Molecules.** — The term *molecule* is applied to particles which consist of two or more atoms chemically combined; if the atoms in a molecule are alike, the molecule is a molecule of an element, but if the atoms are different, then the molecule is a molecule of a compound. The term *atom* is reserved to designate the smallest particle of an element that participates in a chemical change. The molecule is sometimes spoken of as the physical unit, because in most physical changes molecules are not decomposed. Whereas the atom is called the chemical unit, because it is the part of a molecule that, as a rule, is transferred unchanged in chemical changes. Molecules will be discussed again. (See Chapter XII).

Although the atom is conceived to pass as a whole from compound to compound, it should not be inferred that atoms do not

decompose under any conditions. The phenomena exhibited by compounds of radium show that there are particles smaller than atoms. (See Radioactivity.) These very small particles are called corpuscles or electrons. However, the atom is the chemical unit, and whether or not it is a complex group of smaller individuals, its weight is not altered in chemical changes.

**63. Interpretation of Laws by the Atomic Theory.** — First, let us picture a chemical change in terms of the atomic theory, e.g. the combination of copper and oxygen. An appreciable mass of copper consists of many millions of atoms of copper; a mass of oxygen likewise consists of atoms of oxygen. When the chemical change occurs between copper and oxygen, atoms of copper combine with atoms of oxygen and form molecules of a compound called copper oxide. And this combining of atoms into molecules continues until the atoms of copper or of the oxygen (or under certain conditions the atoms of both substances) have been used up. Furthermore, this chemical change takes place not only between vast numbers of atoms, but the quantitative aspects of this multitude of changes conform to the atomic theory. This latter point needs explanation, because it emphasizes the chief feature of the atomic theory, viz. agreement with certain fundamental laws of chemical change. These laws, we have already found, are the law of the conservation of matter, the law of constant composition, and the law of multiple proportions. (1) According to the atomic theory the weight of an atom is never changed. In the case of copper and oxygen the weight of the copper oxide formed equals the sum of the weights of the copper and oxygen used up. Inasmuch as all other chemical changes have this characteristic, viz. unvarying total weight, it is obvious that the atomic theory, which assumes unchanging

THIS PAGE IS LOCKED TO FREE MEMBERS
Purchase full membership to immediately unlock this page

HISTORY

Tens of thousands of important historical sources, many previously unobtainable, are now available for the first time with a Forgotten Books Full Membership.

Unlimited Access
$8.99/month

Continue

*Fair usage policy applies

throughout all its varied changes retains its weight, and (2) that this weight differs from the weight of other kinds of atoms. The weights of different kinds of atoms are called the atomic weights of the elements or briefly **atomic weights.** These weights have been determined by experiment and a table giving the exact and approximate values can be found on the inside of the back cover of this book. The atomic weights are relative weights. That is, the atomic weight of copper is 63.57, not 63.57 gm. or any other actual weight, but 63.57 as long as 16 is accepted as the standard atomic weight of oxygen.

The exact determination of atomic weights is a difficult task. Several principles must be considered in making the final selection. Until this subject is discussed (see Chapter XII), it will be well enough to regard atomic weights as the numerical values of the elements in chemical changes and to select the approximate weights from the table as needed.

**65. Chemical Symbols** represent single atoms of the elements. Thus, H represents one atom of hydrogen. If more than one uncombined atom is to be designated, the proper numeral is placed before the symbol, thus: — 2H means 2 atoms of hydrogen. But if we wish to represent the atoms as in chemical combination, either with themselves or with other atoms, then a subscript is used instead of a coefficient, thus: — $H_2$ means 2 atoms of hydrogen in combination, as in $H_2O$.

Symbols not only represent atoms, but they also express atomic weights. Thus, O represents one atom of oxygen and stands for the atomic weight 16.

**66. Chemical Formulas.** — A formula is a group of symbols which expresses the composition of a compound. In writing a formula, the symbols of the atoms making up a molecule of the compound are placed side by side.

Thus, $H_2O$ is the formula of water, because one molecule consists of 2 atoms of hydrogen and 1 atom of oxygen. The symbols making up a formula might be written in different orders, but usage has determined the order in most cases. A formula represents one molecule. If we wish to designate several molecules, the proper numeral is placed before the formula, thus: — $2KClO_3$ means 2 molecules of potassium chlorate. In certain compounds some of the atoms act like a single atom in chemical changes. This is often expressed by inclosing the group in a parenthesis, e.g. $Zn(OH)Cl$. Sometimes the parenthesis is replaced by a period, e.g. $C_2H_5.OH$ and $CuSO_4.5\ H_2O$. The period and parenthesis are occasionally omitted, especially if the composition of the compound is well understood, e.g. $NH_4OH$. If a group of atoms is to be multiplied, it is placed within a parenthesis. Thus, the formula of lead nitrate is $Pb(NO_3)_2$. This means that the group $NO_3$ is to be multiplied by 2. The expression $2\ Pb(NO_3)_2$ means that the whole formula should be multiplied by 2. Formulas are discussed again in Chapter XII.

**67. Molecular Weights.** — A formula represents a molecular weight which is the sum of the atomic weights represented by the symbols in the formula. Thus, the symbols H and Cl represent 1.008 and 35.46 respectively, and the formula HCl represents $1.008 + 35.46$ or 36.468. If we know the formula of a compound, the molecular weight may be found by adding the atomic weights corresponding to the atoms in the formula. Using approximate values, the molecular weight of water ($H_2O$) is $2 + 16 = 18$; the weight of two molecules of water ($2H_2O$) is $2(2 + 16) = 36$. Similarly, the molecular weight of lead nitrate ($Pb(NO_3)_2$) is $207 + 2(14 + 48) = 331$; the

weight of two molecules of lead nitrate ($2Pb(NO_3)_2$) is $2 \times 331 = 662$.

**68. Use of Atomic Weights in Finding Formulas and Determining Percentage Composition.** — It is clear from foregoing sections (**64–67**) that atomic weights have a fundamental relation to formulas, molecular weights, and percentage composition of compounds. Thus, we have seen that the composition of a compound may be expressed in per cent or by a formula and that the formula by its symbols connects the composition with the atomic weights. Mathematically we express composition in per cent; chemically we express composition by formulas. Thus, the composition of water may be expressed equally well by hydrogen = 11.18 per cent and oxygen = 88.82 or by $H_2O$.

(1) The **calculation of a formula,** when the atomic weights and the percentage composition are known, is simply the process of finding the small integral numbers by which each atomic weight, as represented by its symbol, must be multiplied in order to express the composition. The composition of sulphuric acid is hydrogen = 2.04 per cent, sulphur = 32.65 per cent, oxygen = 65.31 per cent. If the percentage of each element is divided by the corresponding atomic weight, the quotients are 2.04, 1.02, and 4.08. Reducing these quotients to integral numbers (by dividing by 1.02), the final quotients are 2, 1, 4. But these quotients represent the ratio of the atomic weights in a molecule; that is, the relative number of atoms of each element in a molecule. And since atoms are represented by symbols, the formula of sulphuric acid must be $H_2SO_4$. The formula of a compound calculated by this method is called its simplest formula. (See Determination of Molecular Formulas of Compounds, Chapter XII.)

(2) The **calculation of composition** in per cent, or, as it is usually called, the percentage composition of a compound, is simply the process of transposing the chemical formula of a compound into the equivalent mathematical form. Let us take an example. The formula of potassium chlorate is $KClO_3$. This formula represents a molecular weight of 122.5, i.e. $39 + 35.5 + 48 = 122.5$ (using approximate atomic weights). Now if the respective parts of potassium, chlorine, and oxygen (viz. 39, 35.5, 48) are divided by 122.5 and the quotient then multiplied by 100 (e.g. $39/122.5 \times 100$), the product is the per cent of each element in sulphuric acid. It is sometimes more convenient to solve the problem by a proportion. Thus, the proportions for finding the percentage composition of potassium chlorate are: —

$39 : 122.5 :: x : 100$, $x = 31.83$ per cent of potassium
$35.5 : 122.5 :: x : 100$, $x = 28.98$ per cent of chlorine
$48 : 122.5 :: x : 100$, $x = 39.18$ per cent of oxygen

The percentage composition of any compound can be calculated from its formula by this method.

## EXERCISES

**1.** Define law and theory as used in science.
**2.** State the law of the conservation of matter. Illustrate it.
**3.** State the law of constant composition. Illustrate it
**4.** State the law of multiple proportions. Illustrate it.
**5.** State the atomic theory.
**6.** Discuss the relation of atoms to molecules.
**7.** Describe a chemical change in terms of the atomic theory.
**8.** Interpret by the atomic theory the three laws: (*a*) conservation of matter, (*b*) constant composition, (*c*) multiple proportions.
**9.** What are atomic weights? Molecular weights?
**10.** What is the symbol of an element? Interpret the expressions H, $2O$, $N_3$, $2P$, $3O$, $K_2$, $S_2$, $2Cl$.
**11.** What is the formula of a compound? What does a formula repre-

sent? Interpret the expressions: $H_2O$, $2H_2O$, $KNO_3$, $4H_2SO_4$, $NH_4OH$, $C_2H_5.OH$, $3Ca(OH)_2$, $Al_2(SO_4)_3$.

**12.** Give the symbols of the following elements: oxygen, hydrogen, nitrogen, zinc, copper, magnesium, platinum, iron, sodium, sulphur, carbon.

**13.** What elements correspond to the following symbols: Na, Cu, K, Zn, S, P, Pt, Pb, H, Hg, Fe, Mg?

**14.** Give the formulas of the following compounds: water, potassium chlorate, sulphuric acid, magnesium oxide, copper oxide, sodium hydroxide.

## PROBLEMS

**1.** Show that the following sets of compounds illustrate the law of multiple proportions: (*a*) S = 50 per cent and O = 50 per cent, S = 40 and O = 60; (*b*) Sn = 78.8 and S = 21.2, Sn = 65.02 and S = 34.98; (*c*) Hg = 84.92 and Cl = 15.08, Hg = 73.8 and Cl = 26.2.

**2.** Calculate the molecular weight (or multimolecular weight) of the following compounds by finding the sum of the atomic weights: (*a*) magnesium oxide (MgO), (*b*) hydrogen peroxide ($H_2O_2$), (*c*) zinc chloride ($ZnCl_2$), (*d*) $2Cu(NO_3)_2$, (*e*) $3Al_2(SO_4)_3$, (*f*) potassium ferrocyanide ($K_4Fe(CN)_6$), (*g*) $2Na_2B_4O_7$, (*h*) crystallized ferrous sulphate ($FeSO_4.7H_2O$).

**3.** Calculate the simplest formula of the compounds which have the following percentage composition: (*a*) Cl = 60.68, Na = 39.31; (*b*) S = 23.52, Ca = 29.41, O = 47.05; (*c*) C = 40, H = 6.67, O = 53.33.

**4.** As in Problem 3: (*a*) N = 26.17, H = 7.48, Cl = 66.35; (*b*) As = 75.8, O = 24.2; (*c*) N = 82.35, H = 17.63.

**5.** As in Problem 3: (*a*) Si = 19.5, C = 66.62, H = 13.88; (*b*) Ca = 38.71, P = 20, O = 41.29; (*c*) H = 1, K = 39.06, C = 11.99, O = 47.95.

**6.** Calculate the formula of a compound 18 gm. of which contain 8.4 gm. of iron and 9.6 gm. of sulphur.

**7.** As in Problem 6: .84 gm. contain .587 gm. of iron and .253 gm. of oxygen.

**8.** Calculate the percentage composition of (*a*) hydrochloric acid (HCl), (*b*) hydrogen sulphide ($H_2S$), (*c*) ammonia ($NH_3$), (*d*) hydrogen peroxide.

**9.** As in Problem 8: (*a*) Calcium oxide (CaO), (*b*) calcium carbonate ($CaCO_3$), (*c*) calcium sulphate ($CaSO_4$), (*d*) calcium fluoride ($CaF_2$).

**10.** As in Problem 8: (*a*) Cane sugar ($C_{12}H_{22}O_{11}$) and (*b*) grape sugar ($C_6H_{12}O_6$).

**11.** As in Problem 8: (*a*) Sodium phosphate ($Na_3PO_4$), (*b*) disodium phosphate ($HNa_2PO_4$), (*c*) monosodium phosphate ($H_2NaPO_4$), (*d*) phosphoric acid ($H_3PO_4$).

**12.** Calculate the per cent of (*a*) copper and (*b*) water in crystallized copper sulphate ($CuSO_4.5H_2O$).

**13.** Calculate the per cent of (*a*) F in $SiF_4$, (*b*) Al in $AlPO_4$, (*c*) O in $MnO_2$, (*d*) Pb in $PbCO_3$.

# CHAPTER VIII

## CHEMICAL REACTIONS, EQUATIONS, AND CALCULATIONS

**69. Chemical Reactions.** — The substances that participate in chemical changes are said to undergo chemical action, to interact, or to react. The chemical change itself is called a **chemical reaction,** or simply a reaction.

Most of the reactions we shall study can be assigned to one of four general classes — decomposition, combination, substitution, and double decomposition. The first three have already been defined and illustrated (**11, 15, 22**). The fourth class, **double decomposition,** is the decomposition of two compounds and the subsequent recombination of their parts into two other compounds. Thus, when sodium chloride and silver nitrate are mixed in solution, both compounds decompose and their parts recombine to form silver chloride and sodium nitrate.

**70. Chemical Equations.** — In the chapters on Oxygen, Hydrogen, and Water, certain chemical changes were represented by equations. In these equations words were used, e.g.

Mercuric Oxide = Mercury + Oxygen

In the preceding chapter we found that elements and compounds may be represented by symbols and formulas. Therefore, we can now remodel the preliminary equations into chemical equations by using symbols and formulas in place of words. The above equation then becomes: —

$$HgO = Hg + O$$

Equations are used so frequently in chemistry it is necessary to study them fully. Their meaning can best be made clear by a further discussion of one of the four classes of reactions, viz. decomposition. When mercuric oxide is heated, it changes into mercury and oxygen. This reaction is expressed by the equation:—

$$\underset{\text{Mercuric Oxide}}{HgO} = \underset{\text{Mercury}}{Hg} + \underset{\text{Oxygen}}{O}$$

This equation may be read in several ways: (*a*) Mercuric oxide decomposes into mercury and oxygen; (*b*) one molecule of mercuric oxide by decomposition forms one atom of mercury and one atom of oxygen; (*c*) 216 parts by weight of mercuric oxide yield 200 parts of mercury and 16 parts of oxygen (since these are the respective molecular and atomic weights); (*d*) mercuric oxide equals mercury plus oxygen.

Let us consider each lettered statement. In (*a*) nothing is said about the physical conditions attending the chemical change expressed by the equation, because ordinary chemical equations are not designed to tell anything about the physical conditions (i.e. temperature, physical state, solution, etc.) under which the reaction starts, proceeds, and ends. The statements in (*b*) and (*c*) are closely connected and must be considered together. What determines the number of atoms and molecules in an equation? First, equations are the outcome of experiments. Second, ordinary chemical equations express quantitative relations. That is, they not only emphasize the fact that a chemical change conforms to the law of the conservation of matter, but they also express the proportions by weight in which substances take part in the reaction. For example, when a given weight of mercuric oxide is decomposed into mer-

THIS PAGE IS LOCKED TO FREE MEMBERS
Purchase full membership to immediately unlock this page

Get Smart

Over 2,000 years of human knowledge in 797,885 volumes

Instant access $8.99/month

Continue

*Fair usage policy applies

substances involved in a reaction, we can (1) find their symbols or formulas in the book, (2) construct a preliminary equation, and then (3) balance the equation. By balancing an equation we mean selecting the proper coefficients, subscripts, or both, so that there shall be an equal number of atoms of each element on both sides of the equation. Some examples will make this method clear. When phosphorus burns in oxygen, phosphorus pentoxide (see Index) is formed. The preliminary equation is: —

$$P + O = P_2O_5$$

Here it is evident that to balance the equation we need 2P and 5O on the left. Hence the final equation is: —

$$2P + 5O = P_2O_5$$

Again, when zinc and hydrochloric acid interact, hydrogen and zinc chloride are formed. The preliminary equation made from the symbols and formulas is: —

$$Zn + HCl = H + ZnCl_2$$

By inspection, it is evident that two atoms of chlorine are on the right and only one on the left. To obtain the $Cl_2$ it is necessary to write 2HCl. But 2HCl means not only 2Cl but 2H. Hence the equation becomes finally: —

$$Zn + 2HCl = 2H + ZnCl_2$$

A final inspection shows that an equal number of atoms of each element is on both sides of the equation. Many equations may be written by applying this method to the facts found by experiment (see Exercises at the end of this chapter). There are other methods of writing equations, but they need not be discussed here.

**72. Equations for Preceding Reactions.** — The equations corresponding to many reactions already discussed may be collected here, partly for review and partly for future use.

| | | | | | | |
|---|---|---|---|---|---|---|
| $HgO$ | = | $Hg$ | + | $O$ | | |
| Mercuric Oxide | | Mercury | | Oxygen | | |
| $KClO_3$ | = | $KCl$ | + | $_3O$ | | |
| Potassium Chlorate | | Potassium Chloride | | Oxygen | | |
| $PbO_2$ | = | $PbO$ | + | $O$ | | |
| Lead Dioxide | | Lead Oxide | | Oxygen | | |
| $BaO_2$ | = | $BaO$ | + | $O$ | | |
| Barium Dioxide | | Barium Oxide | | Oxygen | | |
| $Na_2O_2$ | + | $H_2O$ | = | $_2NaOH$ | + | $O$ |
| Sodium Peroxide | | Water | | Sodium Hydroxide | | Oxygen |
| | | $H_2O$ | = | $_2H$ | + | $O$ |
| | | Water | | Hydrogen | | Oxygen |
| $S$ | + | $_2O$ | = | $SO_2$ | | |
| Sulphur | | Oxygen | | Sulphur Dioxide | | |
| $C$ | + | $_2O$ | = | $CO_2$ | | |
| Carbon | | Oxygen | | Carbon Dioxide | | |
| $Cu$ | + | $O$ | = | $CuO$ | | |
| Copper | | Oxygen | | Copper Oxide | | |
| $Zn$ | + | $H_2SO_4$ | = | $_2H$ | + | $ZnSO_4$ |
| Zinc | | Sulphuric Acid | | Hydrogen | | Zinc Sulphate |
| $Zn$ | + | $_2HCl$ | = | $_2H$ | + | $ZnCl_2$ |
| Zinc | | Hydrochloric Acid | | Hydrogen | | Zinc Chloride |
| $Na$ | + | $H_2O$ | = | $H$ | + | $NaOH$ |
| Sodium | | Water | | Hydrogen | | Sodium Hydroxide |
| $Ca$ | + | $_2H_2O$ | = | $_2H$ | + | $Ca(OH)_2$ |
| Calcium | | Water | | Hydrogen | | Calcium Hydroxide |
| $Al$ | + | $_3NaOH$ | = | $_3H$ | + | $Na_3AlO_3$ |
| Aluminium | | Sodium Hydroxide | | Hydrogen | | Sodium Aluminate |
| $_2H$ | + | $O$ | = | $H_2O$ | | |
| Hydrogen | | Oxygen | | Water | | |
| $CuO$ | + | $_2H$ | = | $H_2O$ | + | $Cu$ |
| Copper Oxide | | Hydrogen | | Water | | Copper |
| $NaCl$ | + | $AgNO_3$ | = | $AgCl$ | + | $NaNO_3$ |
| Sodium Chloride | | Silver Nitrate | | Silver Chloride | | Sodium Nitrate |

**73. Chemical Calculations based on Equations.** — Many problems may be solved by reactions. Obviously, any convenient weights of zinc and sulphuric acid might be allowed to interact, but the factors and products are always in the proportions given in the equation: —

$$\underset{\substack{\text{Zinc}\\65}}{Zn} + \underset{\substack{\text{Sulphuric Acid}\\98}}{H_2SO_4} = \underset{\substack{\text{Hydrogen}\\2}}{2H} + \underset{\substack{\text{Zinc Sulphate}\\161}}{ZnSO_4}$$

If zinc and sulphuric acid are brought together in any other proportion, some of the acid or the metal will be left over unused. This equation means that zinc and sulphuric acid always interact in the ratio of 65 to 98, and produce hydrogen and zinc sulphate in the ratio of 2 to 161. Hence, if we know the actual weight of one substance participating in a reaction, all other weights involved can be readily calculated. Let us take an example. Suppose 45 gm. of zinc interact with sulphuric acid; the weights of (*a*) acid required, (*b*) hydrogen formed, and (*c*) zinc sulphate produced may be calculated as follows: —

(1) Write the correct chemical equation for the reaction, thus: —

$$Zn + H_2SO_4 = 2\,H + ZnSO_4$$

(2) Place under each term of the equation its atomic or molecular weight,[1] as the case may be, thus: —

$$\begin{array}{ccccccc} Zn & + & H_2SO_4 & = & 2\,H & + & ZnSO_4 \\ 65 & & 98 & & 2 & & 161 \end{array}$$

(3) Place above the proper terms the known weight and required weight (i.e. x, y, z, etc.) involved in the problem, thus:—

[1] The atomic weights are given in the table on the inside of the back cover. Molecular weights are obtained by adding the proper atomic weights.

$$\begin{array}{ccccccc} 45 & & x & & y & & z \\ Zn & + & H_2SO_4 & = & 2\,H & + & ZnSO_4 \\ 65 & & 98 & & 2 & & 161 \end{array}$$

(4) State in the form of a proportion the four terms involved, remembering that the known and required weights are in the same ratio as the atomic or molecular weights. Thus, the three proportions in this problem are: —

(*a*) $45 : x :: 65 : 98$; $x = 67.8$ gm. sulphuric acid.
(*b*) $45 : y :: 65 : 2$; $y = 1.38$ gm. hydrogen.
(*c*) $45 : z :: 65 : 161$; $z = 111.4$ gm. zinc sulphate.

## EXERCISES

**1.** What is a chemical equation? What are the factors and products in an equation? Illustrate your answer.

**2.** Select an equation from **72** and read it in different ways.

**3.** Select from **72** equations illustrating the four classes of reactions.

**4.** Interpret the equation $Mg + O = MgO$ by stating (*a*) what it means and (*b*) what it does not include or express.

**5.** What do the plus (+) and equality (=) signs mean in equations?

**6.** Write equations for the following reactions (see **71**): (*a*) Calcium and hydrochloric acid form calcium chloride and hydrogen. (*b*) Potassium sulphate and barium chloride form barium sulphate and potassium chloride. (*c*) Calcium carbonate and hydrochloric acid form calcium chloride, water, and carbon dioxide.

**7.** As in Exercise 6: (*a*) Calcium oxide and carbon dioxide form calcium carbonate. (*b*) Chlorine and phosphorus form phosphorus trichloride. (*c*) Carbon and lead oxide (PbO) form lead and carbon monoxide.

**8.** State all that the following equations mean: (*a*) $BaCl_2 + H_2SO_4 = BaSO_4 + 2\,HCl$; (*b*) $Pb(NO_3)_2 + H_2S = PbS + 2HNO_3$; (*c*) $AlCl_3 + 3NH_4OH = Al(OH)_3 + 3NH_4Cl$; (*d*) $Ca(OH)_2 + CO_2 = CaCO_3 + H_2O$.

## PROBLEMS

**1.** How many grams of oxygen can be prepared from (*a*) 45 gm. of mercuric oxide, (*b*) 1 kg. of potassium chlorate, (*c*) 1000 gm. of water?

**2.** As in Problem 1, from (*a*) 750 gm. of lead dioxide ($PbO_2$), (*b*) a metric ton of barium dioxide ($BaO_2$), (*c*) 37 gm. of sodium peroxide (by interaction with water)?

**3.** What volume of oxygen at standard conditions could be obtained from 10 gm. of potassium chlorate?

**4.** How many grams of potassium chlorate (92 per cent pure) are needed to prepare (*a*) 100 gm. of oxygen and (*b*) 100 l. (at standard conditions)?

**5.** Suppose 85 gm. of water are decomposed. (*a*) What weights and (*b*) what volumes of gases are produced?

**6.** If a metric ton of pure carbon is burned in air, what weights of other substances are involved?

**7.** One gram of copper is heated intensely in air, and the product is reduced by a gas. Calculate the weights of the other substances involved in the two reactions.

**8.** Hydrogen is prepared from sulphuric acid and 40 gm. of zinc. Calculate the weights of the products of the reaction.

**9.** Calculate the required weights involved in the following reactions: (*a*) water and 100 milligrams of sodium, (*b*) calcium and 100 milligrams of water, (*c*) sodium hydroxide and 25 gm. of aluminium.

**10.** What weight of carbon dioxide is formed by burning a metric ton of coal which is 90 per cent carbon?

**11.** If a balloon holds 150 kg. of hydrogen, how much (*a*) zinc and (*b*) sulphuric acid are needed to generate the gas?

**12.** Sixty grams of mercuric oxide are decomposed. What volume of oxygen at 91° C. and 380 mm. is produced?

**13.** How much water is in (*a*) 34 gm. of crystallized zinc sulphate ($ZnSO_4.7H_2O$), (*b*) 1000 kg. of selenite ($CaSO_4.2H_2O$), (*c*) 1000 gm. washing soda crystals ($Na_2CO_3.10H_2O$)?

**14.** The interaction of barium nitrate and sodium sulphate is expressed by $(BaNO_3)_2 + Na_2SO_4 = BaSO_4 + 2NaNO_3$. If 170 gm. of barium nitrate are used, calculate the weights of the other compounds involved.

**15.** Ammonia gas and hydrogen chloride form solid ammonium chloride. Write the equation for this reaction. If 210 gm. of ammonia are used, calculate the weights of the other compounds involved.

**16.** The oxygen is liberated from 10 gm. of potassium chlorate, and 10 gm. of sulphur are burned in the gas. How much sulphur, if any, is left?

# CHAPTER IX

## CHLORINE — HYDROCHLORIC ACID — ACIDS, SALTS, AND BASES

### Chlorine

**74. Occurrence.** — Free chlorine is never found in nature, but its compounds are widely distributed, the most abundant being sodium chloride or common salt. Many compounds of chlorine with potassium, magnesium, and calcium are found in the deposits at Stassfurt in Germany (**377**). The salts found in sea water contain about 55 per cent of chlorine.

**75. Preparation.** — Chlorine is prepared on a large scale by the electrolysis of a solution of sodium chloride. When a current of electricity is passed through a solution of sodium chloride, chlorine gas is liberated in one compartment of the apparatus and sodium hydroxide is formed in the other. The chlorine is conducted off through pipes, and the dissolved sodium hydroxide is drawn off at intervals. This process is further described in **371**.

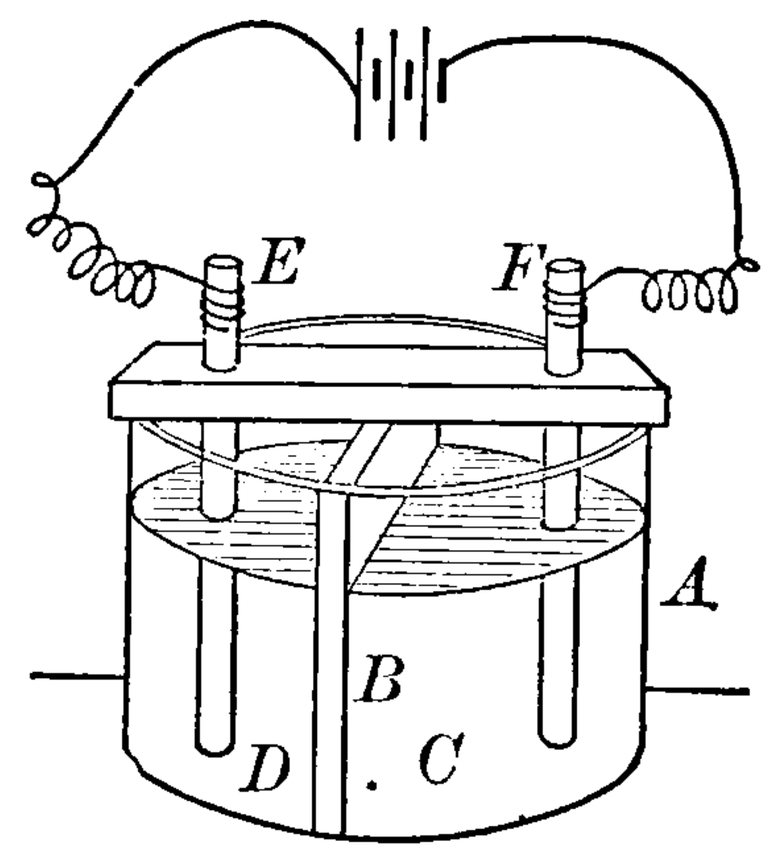


Fig. 22. — Apparatus for the Preparation of Chlorine by the Electrolysis of a Solution of Sodium Chloride.

This process may be readily demonstrated. The apparatus is shown in Fig. 22. A solution of sodium chloride is put in the battery jar A; a little litmus solution is added and then enough dilute hydrochloric acid to color the solution a distinct red. A wooden block (B) divides the jar into two compartments

(C and D), and the two pieces of electric light carbon serve as electrodes (E and F). Soon after the current (from four or more cells or from a reduced street current) is turned on, the solution is bleached by the liberated chlorine in one compartment and turned blue by the sodium hydroxide in the other. The chlorine can also be detected by its odor.

Chlorine is prepared in the laboratory by heating a mixture of manganese dioxide and concentrated hydrochloric acid. (See Part II, Exp. **33**.) The equation is: —

$$\underset{\text{Manganese Dioxide}}{MnO_2} + \underset{\text{Hydrochloric Acid}}{4HCl} = \underset{\text{Chlorine}}{2Cl} + \underset{\text{Manganese Dichloride}}{MnCl_2} + \underset{\text{Water}}{2H_2O}$$

**76. Physical Properties.** — Chlorine is a greenish yellow gas. Its color suggested the name chlorine (from the Greek word *chloros*, meaning greenish yellow), which was given to it by Davy about 1810. It has a disagreeable, suffocating odor, which is very penetrating. If breathed, it irritates the sensitive lining of the nose and throat, and a large quantity would cause death. It is about 2.5 times heavier than air. Hence it is easily collected by downward displacement, i.e. by conducting it downward to the bottom of a vessel and allowing it to displace the air. A liter of dry chlorine at 0° C. and 760 mm. weighs 3.22 gm. Chlorine can be readily liquefied and solidified.

Water dissolves chlorine. The solution is yellowish, and smells strongly of chlo ine. **Chlorine water**, as the solution is called, is unstable. If the solution is placed in the sunlight, oxygen is soon liberated and hydrochloric acid is formed (**53**, Fig. 18); intermediate changes occur, but the simplest equation for the essential change is: —

$$\underset{\text{Water}}{H_2O} + \underset{\text{Chlorine}}{2Cl} = \underset{\text{Hydrochloric Acid}}{2HCl} + \underset{\text{Oxygen}}{O}$$

THIS PAGE IS LOCKED TO FREE MEMBERS
Purchase full membership to immediately unlock this page

HISTORY

Tens of thousands of important historical sources, many previously unobtainable, are now available for the first time with a Forgotten Books Full Membership.

Unlimited Access
$8.99/month

Continue

*Fair usage policy applies

moist chlorine. Dry chlorine does not bleach. (See Part II, Exp. **33**.)

**78. Bleaching Powder** is the main source of the chlorine used in the bleaching industries. It is sometimes called **chloride of lime.** It is a yellowish white substance which smells like chlorine. Acids, like sulphuric and hydrochloric acid, liberate from bleaching powder its "available chlorine," which is about 37 per cent. The equations for the interaction of acids and bleaching powder may be written thus: —

$$\underset{\text{Bleaching Powder}}{CaOCl_2} + \underset{\text{Sulphuric Acid}}{H_2SO_4} = \underset{\text{Chlorine}}{{}_2Cl} + \underset{\text{Calcium Sulphate}}{CaSO_4} + \underset{\text{Water}}{H_2O}$$

$$CaOCl_2 + \underset{\text{Hydrochloric Acid}}{{}_2HCl} = {}_2Cl + \underset{\text{Calcium Chloride}}{CaCl_2} + H_2O$$

Bleaching powder is manufactured by passing chlorine gas over dry calcium hydroxide, the equation for the reaction being: —

$$\underset{\text{Calcium Hydroxide}}{Ca(OH)_2} + \underset{\text{Chlorine}}{{}_2Cl} = \underset{\text{Bleaching Powder}}{CaOCl_2} + \underset{\text{Water}}{H_2O}$$

**79. Bleaching.** — Immense quantities of bleaching powder are used to whiten cotton and linen goods and paper pulp. The pieces of yellowish, unbleached cloth are drawn by machinery through numerous vats containing weak solutions of bleaching powder and of acid, and finally washed to remove all traces of substances which would injure the fabric.

Bleaching is chemically an oxidizing process. The oxygen when it is liberated from water by chlorine is said to be in the **nascent state.** This means that the gas is exceedingly active, because it is not only uncombined, but

just ready to unite with those elements for which it has a marked tendency to combine. Hence this nascent oxygen readily decomposes the colored substances and changes them into colorless compounds. (See Part II, Exp. **34**.)

**80. Uses of Chlorine.** — Besides the use of chlorine in the manufacture of bleaching powder, large quantities of the gas are made into useful compounds of chlorine, e.g. carbon tetrachloride ($CCl_4$) which is used in "pyrene" fire extinguishers and as a solvent for grease; the non-inflammable cleaning mixture called "carbona" contains carbon tetrachloride.

**81. Chlorides** are formed when chlorine combines with other elements, just as oxides are formed from oxygen. (See also **89**.) Two equations are: —

$$\underset{\text{Sodium}}{Na} + \underset{\text{Chlorine}}{Cl} = \underset{\text{Sodium Chloride}}{NaCl}$$

$$\underset{\text{Antimony}}{Sb} + 3Cl = \underset{\text{Antimony Trichloride}}{SbCl_3}$$

## Hydrochloric Acid

**82. Hydrochloric Acid** is the common name of a water solution of **hydrogen chloride,** HCl. Hydrogen chloride is a gas, which is very soluble in water. This solution is known in commerce as muriatic acid (from the Latin word *muria*, meaning brine), but it is more properly called hydrochloric acid. Hydrogen chloride is often called hydrochloric acid gas.

**83. Preparation.** — The gas is prepared by heating sulphuric acid and sodium chloride. If the mixture is gently heated, the chemical change is represented thus: —

$$\underset{\text{Sodium Chloride}}{NaCl} + \underset{\text{Sulphuric Acid}}{H_2SO_4} = \underset{\text{Hydrogen Chloride}}{HCl} + \underset{\text{Acid Sodium Sulphate}}{HNaSO_4}$$

But at a high temperature the equation for the reaction is:—

$$2NaCl + H_2SO_4 = 2HCl + \underset{\text{Sodium Sulphate}}{Na_2SO_4}$$

The solution is prepared by passing the gas into water. (See Part II, Exp. **35**.)

**84. Commercial Hydrochloric Acid** is manufactured in enormous quantities by the method used in the laboratory (Fig. 23). The mixture of salt and sulphuric acid is put into the cast iron retort A and heated by the furnace B to a moderate temperature; as soon as the mass becomes pasty it is raked out upon the flat heater A′ and heated to a high temperature by the furnace B′. The hydrogen chloride escapes through C and C′ into an absorbing tower filled with resistent material over which water trickles; as the gas passes up the tower, it is absorbed by the descending water, and the solution flows out at the bottom as concentrated acid. Hydrochloric acid is produced in England as a by-product in the manufacture of sodium carbonate by the Leblanc process (**365**).

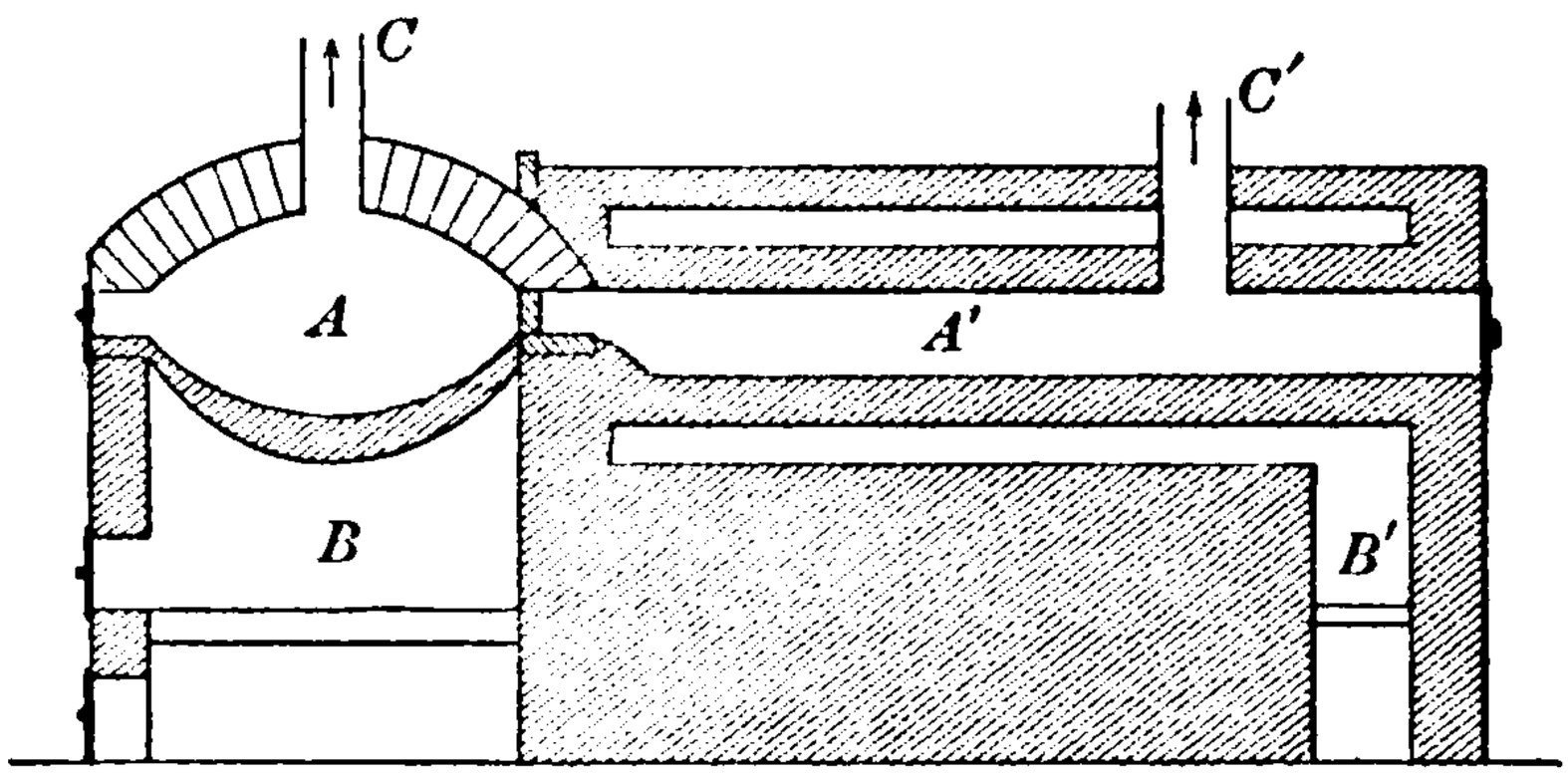

Fig. 23.—Apparatus for the Manufacture of Hydrochloric Acid.

**85. Physical Properties.**—Hydrogen chloride is a colorless gas. It has a choking, sharp taste, and irritates the lining of the nose and throat. The gas does not burn nor support combustion. It is about 1.25 times heavier than air. A liter at 0° C. and 760 mm. weighs 1.64 gm. The gas becomes a colorless liquid when subjected to pressure and a moderately low temperature. The extreme solubility of hydrogen chloride in water is one of its most

striking properties. When it escapes into moist air, it forms white fumes which are really minute drops of a solution of the gas in the moisture of the air. At ordinary temperatures about 500 l. of gas dissolve in 1 l. of water. The solution is the familiar **hydrochloric acid**; its specific gravity is about 1.2, and it contains approximately 40 per cent (by weight) of hydrogen chloride. The gas readily escapes, hence the acid forms fumes when exposed to air.

**86. Chemical Properties.** — Perfectly dry hydrogen chloride has little or no chemical activity. The moist gas unites readily with certain substances, e.g. ammonia gas; in this case dense white clouds of ammonium chloride are formed, the equation for the reaction being:—

$$\underset{\text{Hydrogen Chloride}}{HCl} + \underset{\text{Ammonia}}{NH_3} = \underset{\text{Ammonium Chloride}}{NH_4Cl}$$

This reaction is sometimes used as a **test for hydrogen chloride** (or for ammonia). Hydrochloric acid — the water solution of hydrogen chloride — has marked chemical properties. Like most members of the important class of compounds called acids, it has a sour taste and reddens blue litmus; it also reacts with many metals, liberating hydrogen and forming chlorides of the metals, thus:—

$$\underset{\text{Zinc}}{Zn} + \underset{\text{Hydrochloric Acid}}{2HCl} = \underset{\text{Hydrogen}}{2H} + \underset{\text{Zinc Chloride}}{ZnCl_2}$$

It also forms chlorides by interaction with oxides and hydroxides of metals, thus:—

$$\underset{\text{Calcium Oxide}}{CaO} + 2HCl = \underset{\text{Calcium Chloride}}{CaCl_2} + \underset{\text{Water}}{H_2O}$$

$$\underset{\text{Sodium Hydroxide}}{NaOH} + HCl = \underset{\text{Sodium Chloride}}{NaCl} + \underset{\text{Water}}{H_2O}$$

**87. Aqua Regia.** — Hydrochloric acid and nitric acid interact and liberate chlorine, thus:—

$$3HCl + HNO_3 = 2Cl + NOCl + 2H_2O$$

| Hydrochloric Acid | Nitric Acid | Chlorine | Nitrosyl Chloride | Water |
|---|---|---|---|---|

A mixture of one volume of concentrated nitric acid and three volumes of concentrated hydrochloric acid is usually used. If such a mixture is added to a metal, a chloride of the metal is formed. The alchemists gave it the name **aqua regia,** meaning "royal water," to emphasize the fact that it dissolves the "noble" metal gold. (See Part II, Exp. 43.)

**88. Volumetric Composition of Hydrogen Chloride.** — Experiments show that hydrogen chloride is composed of hydrogen and chlorine in the ratio of 1 : 1 by volume. When a mixture of equal volumes of hydrogen and chlorine is exposed to the direct sunlight or to the action of an electric spark, the gases combine, hydrogen chloride is formed with no residue, and the volume of the resulting gas equals the sum of the volumes of hydrogen and chlorine used. The volumetric relations of hydrogen, chlorine, and hydrogen chloride may be expressed by:—

1 volume of hydrogen + 1 volume of chlorine = 2 volumes of hydrogen chloride.

**89. Chlorides** are compounds of chlorine and other elements. They are formed, as we have already seen, by the direct combination of chlorine and metals and by the interaction of hydrochloric acid with metallic oxides or hydroxides (**81**). Most chlorides are soluble in water. The chlorides of lead and silver (and one of the chlorides of mercury) are not; they are formed as insoluble solids when hydrochloric acid or a soluble chloride undergoes double decomposition with a soluble lead or silver compound. Thus:—

$$\underset{\text{Lead Nitrate}}{Pb(NO_3)_2} + \underset{\text{Hydrochloric Acid}}{2HCl} = \underset{\text{Lead Chloride}}{PbCl_2} + \underset{\text{Nitric Acid}}{2HNO_3}$$

$$\underset{\text{Silver Nitrate}}{AgNO_3} + \underset{\text{Sodium Chloride}}{NaCl} = \underset{\text{Silver Chloride}}{AgCl} + \underset{\text{Sodium Nitrate}}{NaNO_3}$$

The formation of insoluble solids by double decomposition (and certain other changes) is called **precipitation,** and the solid itself is called a **precipitate.** Precipitates often have properties which are readily determined. Thus, silver chloride is white and curdy, and soon turns purple in the light; moreover it dissolves in ammonium hydroxide owing to the formation of a complex soluble compound, which, however, is transformed by dilute nitric acid into silver chloride. Other chlorides have different properties. Hence, the precipitation of silver chloride serves as a **test for hydrochloric acid and soluble chlorides.**

A molecule of a chloride may contain one or more atoms of chlorine, and occasionally the name of the compound indicates this fact. E.g. manganese dichloride ($MnCl_2$), antimony trichloride ($SbCl_3$). If a metal forms two chlorides, the two are distinguished by modifying the name of the metal; the one containing the smaller proportion of chlorine ends in *-ous*, that containing the larger in *-ic*. Thus, mercurous chloride is HgCl, but mercuric chloride is $HgCl_2$.

## Acids, Salts, and Bases

**90. Acids.** — Hydrochloric acid, as already stated, is a member of an important class of compounds called **acids.** The properties of this acid are characteristic of the class. All acids contain hydrogen that can be re-

placed by certain metals; and the compound formed by this replacement is called a salt. Other compounds contain hydrogen, but they are not classed as acids unless they form salts by replacement of the hydrogen by a metal. Thus, water and sugar contain hydrogen, but the hydrogen in water does not form a salt by replacement of its hydrogen by a metal, nor can the hydrogen in sugar be replaced by a metal. Furthermore, most acids have a sour taste and redden blue litmus. Substances which act thus on blue litmus are said to have an **acid reaction.** The presence of acids is often conveniently detected by these simple tests. For example, vinegar, pickles, many fruits, and some wines have a sour taste and turn blue litmus red; further examination reveals the acids in these substances. (See Part II, Exps. **37**, **44**.)

**91. Salts,** as a rule, are not sour and do not redden blue litmus. Substances which act thus on litmus are often described as having a **neutral reaction.** Many salts have the taste associated with a familiar member of this class, viz. common salt or sodium chloride. This class of compounds has many members and their properties are somewhat varied. Salts invariably contain a metal and a non-metal, and most salts also contain oxygen. Chlorides are salts. Thus, we have referred to the chlorides of zinc, sodium, calcium, lead, silver. Reference has also been made to some salts containing oxygen, e.g. potassium chlorate, $KClO_3$, and sodium sulphate, $Na_2SO_4$; these compounds are salts of chloric acid and sulphuric acid respectively. In discussing the chemical properties of hydrochloric acid, it was stated that chlorides are formed from hydrochloric acid not only by the interaction with metals but also with oxides and hydroxides of metals (**89**). That is, the metal, whatever its

THIS PAGE IS LOCKED TO FREE MEMBERS
Purchase full membership to immediately unlock this page

Get Smart

Over 2,000 years of human knowledge in 797,885 volumes

Instant access $8.99/month

Continue

*Fair usage policy applies

the chemical change just cited both the hydrochloric acid and the sodium hydroxide are decomposed and their parts are recombined in a different way; i.e. sodium chloride and water are the new compounds resulting from the recombination (**69**).

For the present, we may regard salts as compounds formed either from acids and bases by neutralization, or from acids by the substitution of a metal, directly or indirectly, for the hydrogen of the acid. The nature and interrelation of acids, salts, and bases will be further discussed (see Chapter XIV).

**94. Naming Acids and Salts.** — Three other acids besides hydrochloric acid contain no oxygen, viz. hydrofluoric (HF), hydrobromic (HBr), and hydriodic (HI). The corresponding salts end in *ide*, e.g. chloride, fluoride, bromide, and iodide. Sometimes the compound commonly known as hydrogen sulphide ($H_2S$) is called an acid, and its salts are the sulphides (**274**). Oxygen is a constituent of most acids and salts, and the names of the oxy-acids and oxy-salts are related, especially the suffixes. This relation can be best illustrated by the chlorine acids that contain oxygen. These acids are hypochlorous (HClO), chlorous ($HClO_2$), chloric ($HClO_3$), and perchloric ($HClO_4$). In forming the names of the corresponding salts the suffix *ous* becomes *ite*, while *ic* becomes *ate;* the prefixes are not changed. Thus, the names of the corresponding sodium salts are sodium hypochlorite, chlorite, chlorate, and perchlorate respectively. In the case of the acids of some elements the body of the name is modified, e.g. sulphuric becomes *sulphate*, phosphoric *phosphate*, and tartaric *tartrate*.

Bases are distinguished by placing the name of the metal before the word *hydroxide*, e.g. sodium hydroxide (NaOH), calcium hydroxide ($Ca(OH)_2$).

## EXERCISES

**1.** What useful compounds contain chlorine?

**2.** Sketch from memory the apparatus used to prepare chlorine.

**3.** Summarize the physical properties of chlorine. How can chlorine be quickly distinguished from the gases previously studied?

**4.** Summarize the chemical properties of chlorine.

**5.** Develop the topics: (*a*) nascent state, (*b*) chlorine water, (*c*) liquid chlorine, (*d*) chlorine is an oxidizing agent.

**6.** What is (*a*) hydrogen chloride, (*b*) muriatic acid, (*c*) chloride of lime, (*d*) hydrochloric acid, (*e*) commercial hydrochloric acid?

**7.** Give the name and formula of five chlorides.

**8.** State the characteristic properties of hydrogen chloride.

**9.** Summarize the chief properties of hydrochloric acid.

**10.** What is the volumetric composition of hydrogen chloride?

## PROBLEMS

**1.** Calculate the weight of chlorine in (*a*) 2 kg. of sodium chloride, (*b*) 2 mg. of calcium chloride, (*c*) 1 metric ton of aluminium chloride, and (*d*) 45 gm. of potassium chlorate.

**2.** (*a*) What is the weight of 15 l. of chlorine gas measured at 20° C. and 790 mm.? (*b*) How many grams of potassium chloride are needed to prepare the weight of chlorine found in (*a*)?

**3.** How many grams of each of the three products are formed when hydrochloric acid interacts with 85 grams of manganese dioxide?

**4.** How many liters of (*a*) chlorine and (*b*) hydrogen chloride can be obtained from 27 gm. of sodium chloride? (Standard conditions.)

**5.** How many cubic centimeters of hydrochloric acid solution having a specific gravity of 1.21 and containing 42.06 per cent of HCl by weight, are needed to form 4 liters of chlorine? (Standard conditions.)

**6.** (*a*) How much sodium chloride can be formed by burning sodium in 40 gm. of chlorine? In 40 liters? (*b*) How much antimony trichloride can be formed from the same quantities of chlorine? (Standard conditions.)

**7.** (*a*) What is the weight of 25 l. of hydrogen chloride at 18° C. and 765 mm.? (*b*) What volume at the same temperature and pressure will 25 gm. occupy?

**8.** How much hydrogen chloride by weight and by volume (at standard conditions) can be obtained from a metric ton of sodium chloride which is 85 per cent pure?

# CHAPTER X

## NITROGEN — AMMONIA — NITRIC ACID AND NITRATES — NITROGEN OXIDES

### Nitrogen

**95. Occurrence.** — Nitrogen is an essential ingredient of the atmosphere, being about four fifths (or exactly 78.122 per cent) of this vast mixture of gases which envelops the earth. Besides being a constituent of nitric acid, nitrates, and ammonia, and of the many compounds related to them, nitrogen is also found in many animal and vegetable substances fundamentally related to life, e.g. the compounds called proteins (see Protein, Chapter XVII).

**96. Preparation.** — Nitrogen is prepared on a large scale from liquid air (**134**). It can also be obtained from air by removing the oxygen by phosphorus (Fig. 24).

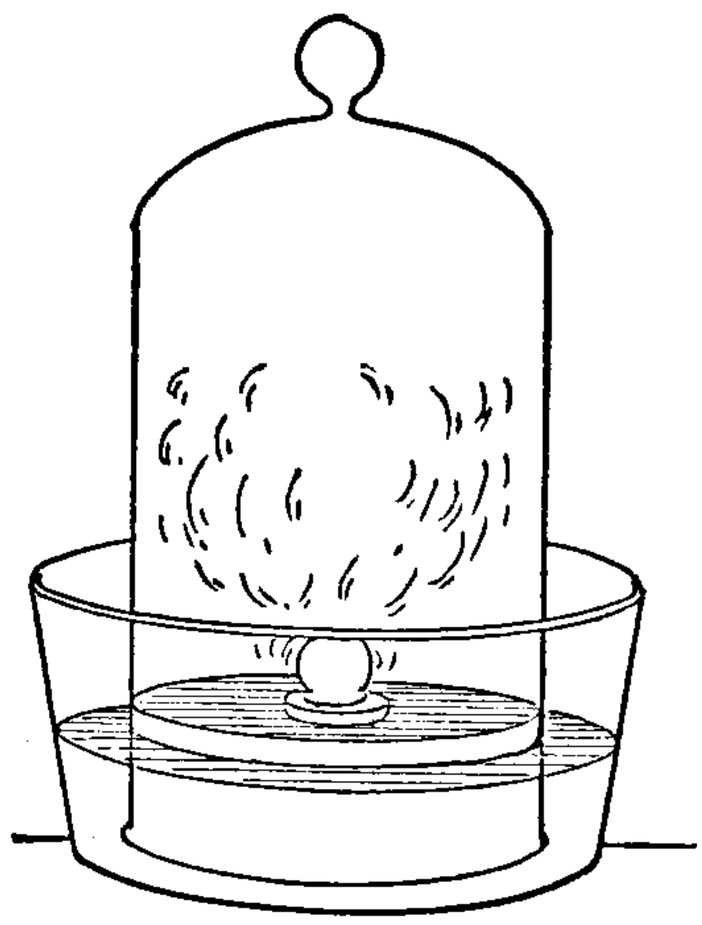

Fig. 24. — Preparation of Nitrogen by burning Phosphorus in Confined Air.

Phosphorus is put in a small dish or a crucible cover supported on a cork floating in a vessel of water. Upon igniting the phosphorus with a hot wire and placing a bell jar over the cork, the phosphorus and oxygen unite, forming clouds of white phosphorus pentoxide ($P_2O_5$); this solid soon dissolves in the water, which rises inside the jar owing to the removal of the oxygen, and the nitrogen is finally left.

It is prepared in the laboratory by heating a solution of sodium nitrite and ammonium chloride. The equations expressing the reactions are —

$$NaNO_2 + NH_4Cl = NH_4NO_2 + NaCl$$

Sodium Nitrite — Ammonium Chloride — Ammonium Nitrite — Sodium Chloride

$$NH_4NO_2 = 2N + 2H_2O$$

Ammonium Nitrite — Nitrogen — Water

Small quantities of nitrogen are easily obtained by heating ammonium dichromate ($(NH_4)_2Cr_2O_7$). (See Part II, Exps. **45**, **52**.)

**97. Physical and Chemical Properties of Nitrogen.** — Nitrogen is a colorless gas, and has no taste or odor. It is a little lighter than oxygen and air. A liter at standard conditions weighs 1.25 gm. It is only slightly soluble in water. Nitrogen does not support combustion nor sustain life. Flames are extinguished by nitrogen and animals die in it, because the supply of oxygen is cut off. Subjected to a low temperature and increased pressure, nitrogen becomes a colorless liquid and ultimately a white solid. (See Part II, Exp. **45 B**.)

The fact that nitrogen quickly extinguishes a candle flame and kills a mouse was first observed by Rutherford, a Scottish physician, who discovered the gas in 1772. Soon after, Lavoisier showed the true relation of nitrogen to the atmosphere.

Nitrogen is much less active chemically than oxygen; it is sometimes called an inert element, because it does not combine with elements at ordinary temperatures. At high temperatures and under special conditions, however, nitrogen forms many compounds. It combines with magnesium and a few other metals at a red heat, forming nitrides, e.g. magnesium nitride ($Mg_3N_2$). Electric sparks cause nitrogen to combine with oxygen and with hydrogen, forming nitric oxide (NO) and ammonia ($NH_3$).

**98. Relation of Nitrogen to Life.** — Nitrogen, as well as oxygen, is vitally connected with life, though in a different way. All animals need nitrogen for their growth. Now although we live in an atmosphere containing such a large proportion of this gas, we cannot assimilate it directly. The nitrogen needed by animals must be in chemical combination to become available. That is, it must be eaten in the form of nitrogenous food, such as lean meat, fish, wheat and other grains (see Protein, Chapter XVII). Nor have plants, with few exceptions, power to assimilate free nitrogen from the atmosphere. Most plants take up combined nitrogen from the soil in the form of nitrates or of ammonia. Hence combined nitrogen is being constantly removed from the soil, and in order to restore it, some nitrogen compound must be added, e.g. sodium nitrate ($NaNO_3$), calcium nitrate ($Ca(NO_3)_2$), ammonium chloride ($NH_4Cl$), or ammonium sulphate ($(NH_4)_2SO_4$); organic materials are often used, e. g. manure, dried blood, and meat or fish scraps. Such a replenishing substance, or a mixture containing it, is called a **fertilizer.** Many experiments have shown, however, that leguminous plants, such as peas, beans, and clover, take up nitrogen from the air by means of bacteria, which are in nodules on their roots (Fig. 25). This process is called fixation of nitrogen. Sometimes soil is treated with a preparation which contains nitrogen-forming bacteria.

Fig. 25. — A Leguminous Plant

## Ammonia

The term *ammonia* includes both the gas ($NH_3$) and its solution in water ($NH_4OH$), though the latter is more accurately called ammonium hydroxide.

**99. Formation of Ammonia.** — When vegetable and animal matter containing nitrogen decays, the nitrogen and hydrogen are usually liberated as ammonia. The odor of ammonia may be noticed near stables. If animal substances containing nitrogen are heated (especially with lime or soda-lime), ammonia is given off. Soft coal contains combined nitrogen and hydrogen, and when the coal is heated to make illuminating gas, ammonia is obtained.

**100. Preparation.** — Ammonia gas is prepared in the laboratory by heating ammonium chloride with a base, usually calcium hydroxide. The equation for the reaction is —

$$\underset{\text{Ammonium Chloride}}{2NH_4Cl} + \underset{\text{Calcium Hydroxide}}{Ca(OH)_2} = \underset{\text{Ammonium Hydroxide}}{2NH_4OH} + \underset{\text{Calcium Chloride}}{CaCl_2}$$

The ammonium hydroxide is unstable, especially when heated, and decomposes into ammonia and water, thus: —

$$\underset{\text{Ammonium Hydroxide}}{NH_4OH} = \underset{\text{Ammonia}}{NH_3} + \underset{\text{Water}}{H_2O}$$

The gas is very volatile, and is usually collected by upward displacement, i.e. by allowing the gas to flow upward into a bottle and displace the air. The solution is prepared by conducting the gas into water. (See Part II, Exps. **46**, **53**.)

The ammonia gas from which the ammonia of commerce is manufactured is obtained mainly from the ammoniacal liquor or gas liquor of the illuminating gas works. The gases which come

from the retorts in which the coal is heated are washed with water. This impure gas liquor is treated with lime to liberate the ammonia, which is absorbed in tanks containing hydrochloric acid or sulphuric acid. This solution upon the addition of a base (e.g. calcium hydroxide) gives up its ammonia, which is dissolved in distilled water, forming thereby the ammonium hydroxide or ammonia of commerce. Some ammonia is obtained from the gases liberated from coke ovens, and it is also manufactured by the direct combination of nitrogen and hydrogen.

**101. Physical Properties of Ammonia.** — Ammonia gas is colorless. It has an exceedingly pungent odor, and if inhaled suddenly or in large quantities, it brings tears to the eyes and may cause suffocation. It is a light, volatile gas, being only .59 times as heavy as air. A liter of the gas at 0° C. and 760 mm. weighs .77 gm. Ammonia gas is easily liquefied if cooled to 0° C. and subjected to a pressure of 4.2 atmospheres (**121**). **Liquefied ammonia** is often called anhydrous ammonia, because it contains no water. It boils at about −34° C. Hence, if it is exposed to the air or warmed in any way, it changes into the gas, and in so doing absorbs considerable heat. This fact has led to the extensive use of liquid ammonia in the manufacture of ice (**104**).

Ammonia gas is very soluble in water. A liter of water at 0° C. dissolves 1148 l. of gas (measured at 0° C. and 760 mm.), while at the ordinary temperature 1 l. of water dissolves about 700 l. of gas. This solution of the gas is often called ammonia, though other names, e.g. ammonium hydroxide and ammonia water are sometimes applied to it (**105**); it gives off the gas freely, when heated, as may easily be discovered by the odor or by the formation of dense white fumes of ammonium chloride ($NH_4Cl$) when the solution is exposed to hydrochloric acid. The commercial solution called ammonia is lighter

THIS PAGE IS LOCKED TO FREE MEMBERS
Purchase full membership to immediately unlock this page

HISTORY

Tens of thousands of important historical sources, many previously unobtainable, are now available for the first time with a Forgotten Books Full Membership.

Unlimited Access
$8.99/month

Continue

*Fair usage policy applies

liberate nitrogen, the volumetric composition of ammonia can be shown to be nitrogen is to hydrogen as 1 : 3. A supplementary experiment shows that two volumes of ammonia are formed by the union of one volume of nitrogen and three volumes of hydrogen. (Compare **54, 88.**)

In demonstrating the volumetric composition of ammonia, a tube A (Fig. 26) filled with a known volume of chlorine is provided with a funnel B through which concentrated ammonium hydroxide is slowly dropped into the chlorine, until the reaction ceases. After the excess of ammonium hydroxide is neutralized with sulphuric acid, the volume of nitrogen left is found to be one third of the original volume of chlorine. Now hydrogen and chlorine combine in equal volumes (**88**). Hence the volume of hydrogen withdrawn from the ammonia must be equal to the original volume of chlorine. But this volume is three times the volume of the nitrogen, therefore there must be three times as much hydrogen as nitrogen in ammonia gas.

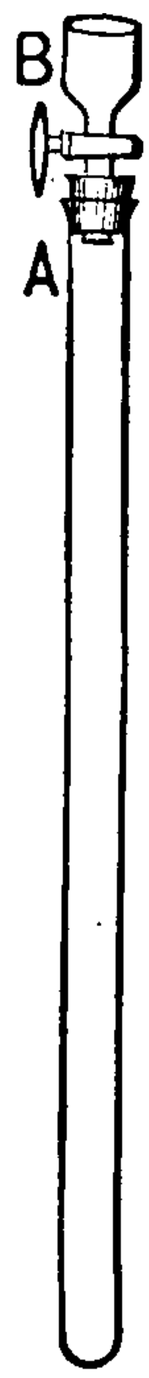


Fig. 26.—Apparatus for determining the Composition of Ammonia Gas.

**104. Ammonia as a Refrigerant.**—The use of ammonia in producing low temperatures depends upon the fact that liquefied ammonia (not ordinary ammonia) changes rapidly into a gas when its temperature is raised or the pressure reduced. Hence, if liquefied ammonia is allowed to flow through a pipe immersed in a solution of sodium chloride or calcium chloride (technically called a brine), the ammonia evaporates in the pipe and cools the brine, which may be used directly as a refrigerant or for making ice. In some cold-storage plants, breweries, packing houses, and sugar refineries, this cold brine is pumped through pipes placed in the rooms where a low temperature is desired.

The construction and general operation of an ice-making plant is shown in Fig. 27. Liquefied ammonia is forced from a tank

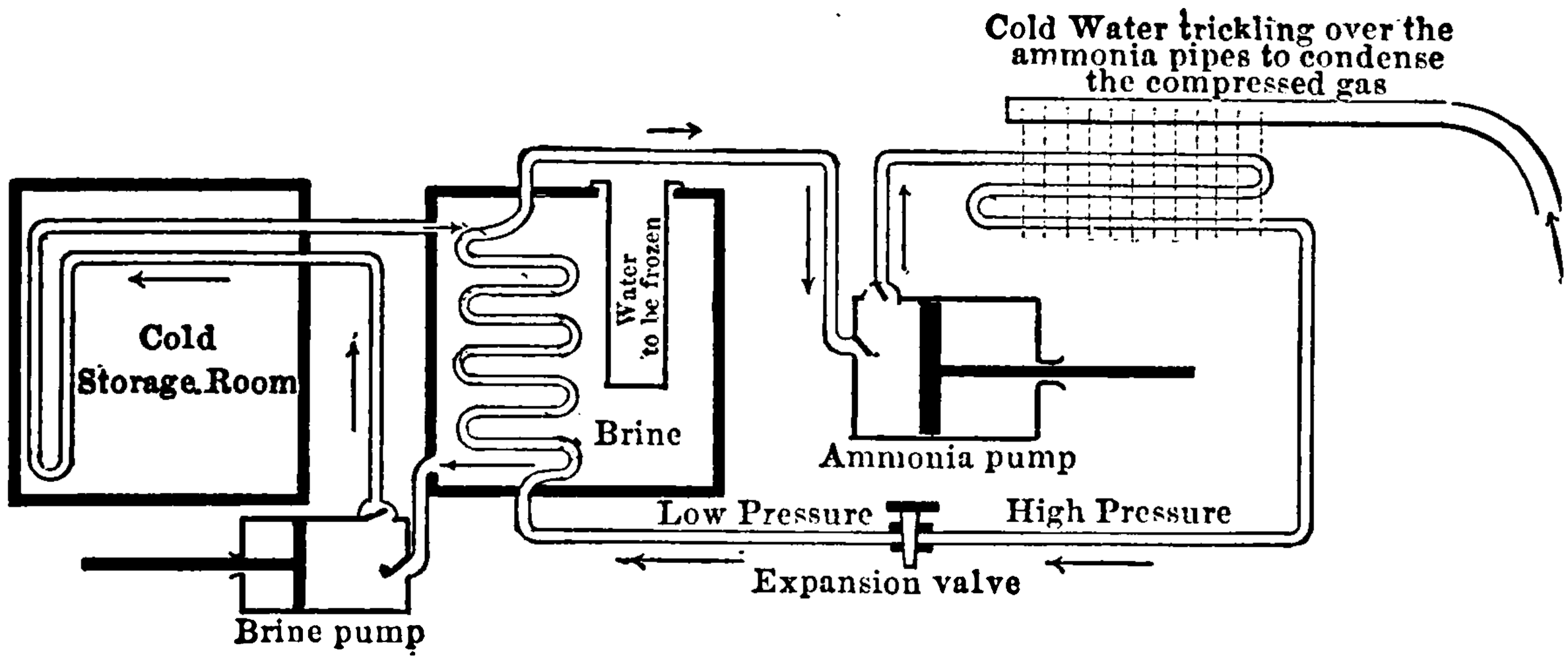


Fig. 27. — Apparatus for utilizing Cooled Brine as a Refrigerant and in making Ice.

into a series of pipes which are submerged in a large vat nearly filled with brine. Metal cans containing pure water to be frozen are immersed in the brine, which is kept below the freezing point of water by rapid evaporation of the ammonia in the pipes. After several hours the water in the cans is frozen into cakes of ice. Sometimes the brine is circulated through pipes, as in a cold storage plant. As fast as the ammonia gas forms in the pipes, it is removed by exhaust pumps into another tank, where it is condensed into liquefied ammonia and conducted, as needed, into the first tank ready for renewed use.

**105. Ammonium Hydroxide and Ammonium Compounds.** — When ammonia gas is passed into water, the ammonia combines with the water to some extent and forms a solution of an unstable compound having the composition represented by the formula $NH_4OH$. This compound is ammonium hydroxide. Ammonium hydroxide is a base (**92**). Like other members of this class of substances it turns litmus blue; it also neutralizes acids, thus: —

$$\underset{\text{Ammonium Hydroxide}}{NH_4OH} + \underset{\text{Hydrochloric Acid}}{HCl} = \underset{\text{Ammonium Chloride}}{NH_4Cl} + \underset{\text{Water}}{H_2O}$$

Ammonium hydroxide is widely used as a cleansing agent (especially for the removal of grease), as a restorative in cases of fainting or of inhaling irritating gases; large quantities are consumed in dyeing and calico printing, and in the manufacture of dyestuffs, sodium carbonate and bicarbonate, and ammonium compounds. Its salts have many domestic, industrial, and agricultural uses.

It is believed that **ammonium compounds** contain a group of atoms which acts chemically like an atom of a metal. This group is called ammonium, and its formula is $NH_4$. Ammonium has never been separated from its compounds. Ammonium is called a **radical,** because it is the root or foundation of a series of compounds. It is likewise called a hypothetical metal, because its existence is assumed, and it acts chemically like metals.

## Nitric Acid

**106. Formation.**—Nitric acid, $HNO_3$, is formed in small quantities when electric sparks are passed through moist air. Hence nitric acid or its salts can be detected in the atmosphere after a thunderstorm. This chemical change is now being applied on a commercial scale in Norway. Air is forced through a large tube containing a powerful electric arc spread out into a disk. The nitrogen gas and oxygen combine and the gases are absorbed in water or in a solution of lime, thereby forming nitric acid or calcium nitrate. The latter is used as a fertilizer in place of sodium nitrate (**98**, **373**).

**107. Preparation.** — Nitric acid is prepared in the laboratory and on a large scale by heating concentrated sulphuric acid with a nitrate, usually sodium nitrate.

THIS PAGE IS LOCKED TO FREE MEMBERS
Purchase full membership to immediately unlock this page

Get Smart

Over 2,000 years of human knowledge in 797,885 volumes

Instant access $8.99/month

Continue

*Fair usage policy applies

compounds. The acid that has been exposed to the sunlight is often brown, and if the light is intense, a brownish gas may often be seen in bottles of the acid. It is somewhat volatile, and the vapor dissolves readily in

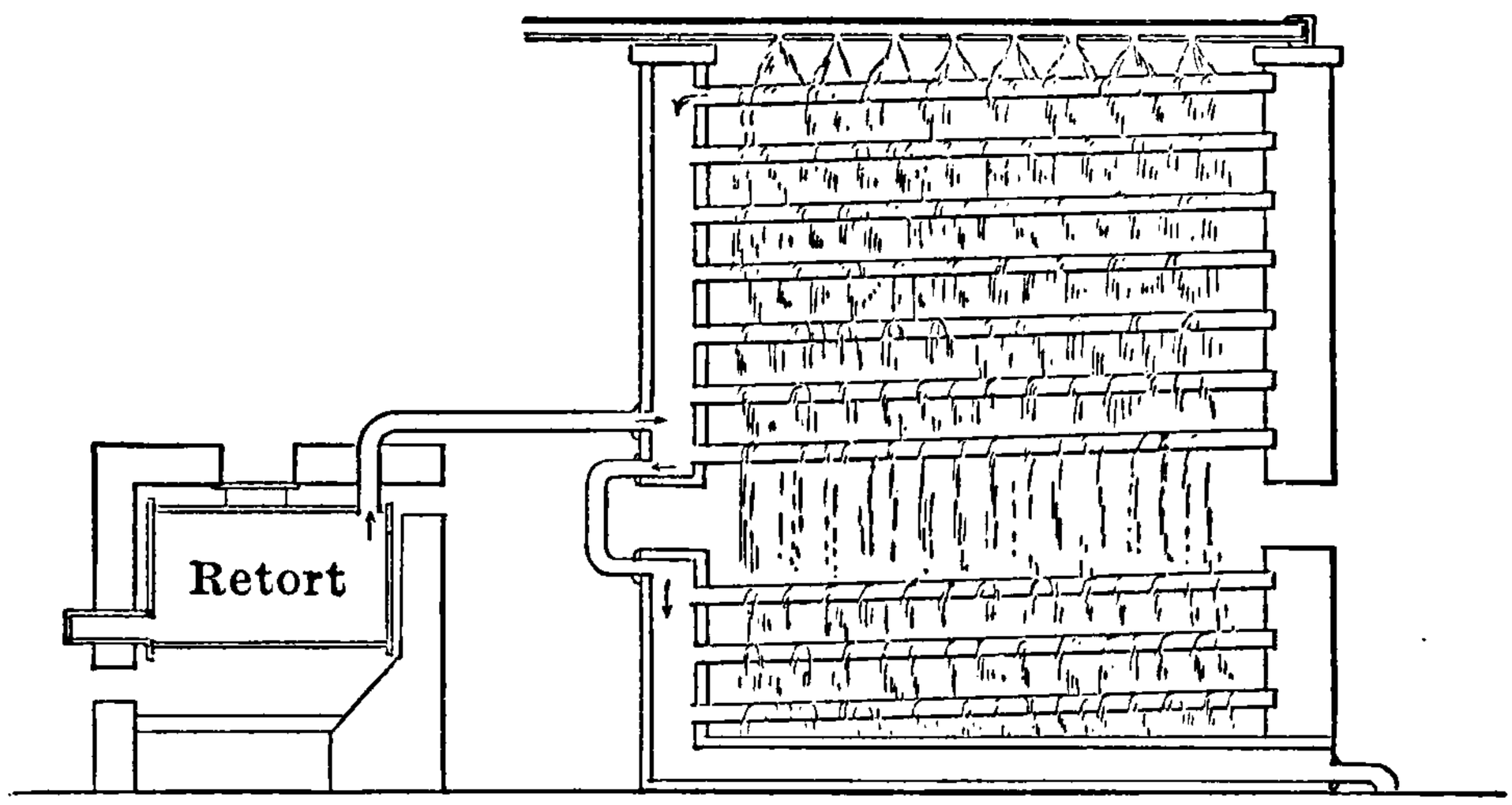


Fig. 29. — Apparatus for the Manufacture of Nitric Acid.

water; hence the acid forms irritating fumes when exposed to air, especially moist air. (Compare **85.**) The specific gravity of the commercial acid is about 1.4, and it contains about 65 per cent of the compound $HNO_3$, the rest being water.

**109. Chemical Properties.** — A solution of nitric acid has the properties characteristic of that class of compounds. It is sour, turns blue litmus red, and forms salts — the nitrates. It is an unstable substance, and decomposes readily; among the decomposition products is a brown gas, nitrogen dioxide ($NO_2$), which causes the brown color referred to above (**108**).

Nitric acid reacts readily with many substances. With organic compounds like the skin it forms a yellow compound. Hence it stains the skin yellow, and the concentrated acid causes serious burns. With other organic compounds it forms explosives, such as nitroglycerin and nitrocellulose (**230**). One of the decomposition products

of nitric acid is oxygen. Usually the oxygen is not liberated but oxidizes whatever is available. Hence nitric acid is an oxidizing agent. Thus, charcoal burns brilliantly in the hot acid, while straw, sawdust, hair, and similar substances are charred and even inflamed by it; some organic compounds, when heated with nitric acid, are completely decomposed into carbon dioxide and water. In the mixture of nitric and hydrochloric acids called *aqua regia*, nitric acid acts as an oxidizing agent (**87**). Finally, it interacts readily and often violently with metals, metallic oxides and hydroxides. (Compare **86, 89.**) The products of these reactions vary, the essential ones being nitrates and nitrogen oxides (**112**). (See Part II, Exps. **48**, **54**.)

**110. Uses.** — Nitric acid is one of the common laboratory acids. Large quantities are used in the manufacture of nitrates, dyestuffs, sulphuric acid, and explosives, and in etching copper plates.

**111. Composition of Nitric Acid.** — Many independent experiments show that the composition of nitric acid is expressed by the formula $HNO_3$. (1) When electric sparks are passed through a bottle containing moist air or a solution of potassium hydroxide, the water becomes acid to litmus or the liquid will be found to contain a trace of potassium nitrate. (2) Nitric acid may be reduced to ammonia by nascent hydrogen, thus showing that the acid contains nitrogen. (3) Conversely, if a mixture of ammonia and air is passed over a mass of hot, porous platinum, nitric acid is formed. (4) If the acid is allowed to flow through a hot porcelain or clay tube, oxygen is one of the gaseous products. (5) Analysis shows that it contains 1.59 per cent of hydrogen, 22.22 of nitrogen, and 76.19 of oxygen.

**112. Nitrates.** — Nitric acid forms salts called nitrates. They are prepared by the methods usually used for salts, i.e. the interaction of nitric acid and metals or metallic

oxides and the neutralization of hydroxides by nitric acid. Nitrates are formed in the soil by the slow action of bacteria on complex nitrogen compounds; this process, which is called **nitrification**, is slow but very important, since most plants take up nitrogen in the form of nitrates and utilize the nitrogen in forming protein. The interaction of nitric acid and most metals is exceedingly vigorous, and for this reason, probably, the alchemists called the acid *aqua fortis* — strong water. The reaction varies with the metal, the concentration of the acid, and the temperature. Hydrogen is never liberated so that it can be collected, for it is oxidized by the nitric acid.

The interaction between nitric acid and two different metals will serve as examples of the common reactions. When moderately dilute nitric acid is poured upon copper, a reddish brown gas is given off, and the liquid turns blue, owing to dissolved copper nitrate. The complete equation for the reaction is: —

$$\underset{\text{Copper}}{3Cu} + \underset{\text{Nitric Acid}}{8HNO_3} = \underset{\text{Copper Nitrate}}{3Cu(NO_3)_2} + \underset{\text{Nitric Oxide}}{2NO} + 4H_2O$$

This equation is really made up of three equations and conceals the way in which the reactions really take place. The first reaction may be expressed thus: —

$$(1)\ 2HNO_3 = 3O + \underset{\text{Nitric Oxide}}{2NO} + H_2O$$

The oxygen next oxidizes the copper, thus: —

$$(2)\ 3Cu + 3O = \underset{\text{Copper Oxide}}{3CuO}$$

The copper oxide then reacts with the nitric acid, thus: —

$$(3)\ 3CuO + 6HNO_3 = \underset{\text{Copper Nitrate}}{3Cu(NO_3)_2} + 3H_2O$$

THIS PAGE IS LOCKED TO FREE MEMBERS
Purchase full membership to immediately unlock this page

HISTORY

Tens of thousands of important historical sources, many previously unobtainable, are now available for the first time with a Forgotten Books Full Membership.

Unlimited Access
$8.99/month

Continue

*Fair usage policy applies

Since many nitrates, when heated, give up oxygen, they are powerful oxidizing agents. Thus, when potassium nitrate is dropped on hot charcoal, the charcoal burns vigorously and rapidly. This kind of chemical action is called **deflagration.** (See Part II, Exps. **50**, **51**, **54**.)

**113. The Test for Nitrates** (and of course for nitric acid) is as follows: Add to the nitric acid or the solution of the nitrate an equal volume of concentrated sulphuric acid, and cool the mixture. Upon the cool mixture pour carefully a cold, dilute solution of freshly prepared ferrous sulphate. A dark brown layer appears where the two liquids meet, owing to the formation of a brown unstable compound whose composition is approximately $3FeSO_4.2NO$. (Fig. 30.) (See Part II, Exp. **49**.)

Fig. 30.—The Test for Nitric Acid and Nitrates.

**114. Nitrous Acid,** $HNO_2$, is not easily obtained in the free state owing to its instability, but its salts — the nitrites — are well known. Potassium nitrite ($KNO_2$) and sodium nitrite ($NaNO_2$) are formed by removing the oxygen from the corresponding nitrate by heating alone or with lead. Nitrites give off brown fumes ($NO_2$) when treated with sulphuric acid, and are thus readily distinguished from nitrates. (See Part II, Exp. **55**.)

## Oxides of Nitrogen

**115. Nitrous Oxide,** $N_2O$, is prepared by heating ammonium nitrate. The equation for the reaction is: —

$$\underset{\text{Ammonium Nitrate}}{NH_4NO_3} = \underset{\text{Nitrous Oxide}}{N_2O} + \underset{\text{Water}}{2H_2O}$$

This colorless gas has a faint but pleasant odor. It is less soluble in hot than in cold water, and the solution has a sweet taste. It is easily liquefied by reducing the temperature and applying pressure, and is often used in this

form to furnish the gas itself. The gas does not burn, but it supports the combustion of many well burning substances, though not so vigorously as oxygen does. Thus, sulphur, unless well ignited, will not burn in nitrous oxide. The most striking property of nitrous oxide is its effect on the human system. If inhaled for a short time, it causes more or less nervous excitement, often manifested by laughter, and on this account the gas was called "laughing gas" by Davy, who first studied its properties in 1799. If breathed in large quantities, it produces unconsciousness and insensibility to pain. The gas is often used as an anesthetic in dentistry. (See Part II, Exp. **56**.)

**116. The Volumetric Composition of Nitrous Oxide.** — Experiment shows that two volumes of nitrogen and one of oxygen form two volumes of nitrous oxide.

**117. Nitric Oxide,** NO, is usually prepared by the interaction of copper and dilute nitric acid (sp. gr. 1.2). The complete equation for the reaction is —

$$\underset{\text{Copper}}{3Cu} + \underset{\text{Nitric Acid}}{8HNO_3} = \underset{\text{Nitric Oxide}}{2NO} + \underset{\text{Copper Nitrate}}{3Cu(NO_3)_2} + 4H_2O$$

Nitric oxide is a colorless gas. It is a little heavier than air and only slightly soluble in water. Upon exposure to air, it combines at once with the oxygen, forming reddish brown fumes of nitrogen dioxide. The simplest equation for this reaction is —

$$\underset{\text{Nitric Oxide}}{NO} + O = \underset{\text{Nitrogen Dioxide}}{NO_2}$$

This property distinguishes nitric oxide from all other gases. It does not burn nor support combustion unless the burning substance (e.g. phosphorus or sodium)

introduced is hot enough to decompose the gas into nitrogen and oxygen, and then, of course, the liberated oxygen assists the combustion. (See Part II, Exp. **50**.)

**118. The Volumetric Composition of Nitric Oxide.** — By experiment it is found that one volume of nitrogen and one volume of oxygen form two volumes of nitric oxide.

**119. Nitrogen Dioxide,** $NO_2$, is the reddish brown gas formed by the direct combination of nitric oxide and oxygen. Thus: —

$$\underset{\text{Nitric Oxide}}{NO} + O = \underset{\text{Nitrogen Dioxide}}{NO_2}$$

It is also produced by heating certain nitrates. Thus —

$$\underset{\text{Lead Nitrate}}{Pb(NO_3)_2} = \underset{\text{Nitrogen Dioxide}}{2NO_2} + \underset{\text{Lead Oxide}}{PbO} + \underset{\text{Oxygen}}{O}$$

The fumes of nitrogen dioxide usually appear when nitric acid and metals interact, but, as already stated, the nitrogen dioxide is produced by a second reaction, viz. the combination of nitric oxide with the oxygen of the air. Nitrogen dioxide has a disagreeable odor, and if breathed in moderately large quantities, it is poisonous. It interacts with water and yields under ordinary conditions nitric oxide and nitric acid, thus: —

$$\underset{\text{Nitrogen Dioxide}}{3NO_2} + \underset{\text{Water}}{H_2O} = \underset{\text{Nitric Acid}}{2HNO_3} + \underset{\text{Nitric Oxide}}{NO}$$

(See **106**.) It also dissolves in concentrated nitric acid, forming **fuming nitric acid,** which is a powerful oxidizing agent. (See Part II, Exp. **50**.)

When the reddish brown gas is cooled, it gradually loses its color and at about 26° C. becomes a yellow gas, which has the composition represented by the formula $N_2O_4$ and is called **nitrogen**

THIS PAGE IS LOCKED TO FREE MEMBERS
Purchase full membership to immediately unlock this page

Get Smart

Over 2,000 years of human knowledge in 797,885 volumes

Instant access $8.99/month

Continue

*Fair usage policy applies

# CHAPTER XI

## THE ATMOSPHERE — ARGON — LIQUID AIR

**120. The Atmosphere** is the vast volume of gases that envelops the earth and extends many miles into space. The terms *atmosphere*, *the air*, and *air* are often used interchangeably.

Aristotle (384–322 B. C.) regarded air as one of the four elementary principles whose combinations made up all substances in the universe. The other three were earth, fire, and water. He taught that air possesses two fundamental properties — heat and dampness. The early chemists used the word air in the sense in which the word gas is now employed. Thus, we have already learned that hydrogen was first called inflammable air.

**121. Atmospheric Pressure.** — This enormous mass of gas exerts a pressure on the earth's surface called **atmospheric pressure,** which is about fifteen pounds on every square inch. The amount of pressure on a square inch is often called "an atmosphere," and it is sometimes used as a unit of pressure. Thus, three atmospheres means a pressure of forty-five pounds per square inch. Atmospheric pressure is measured by an instrument called a barometer, and the pressure at a given time is found simply by reading the height of the mercury column of the barometer. The normal or standard pressure of the atmosphere is equal to the pressure of a column of mer-

cury which is 760 millimeters (or 29.92 inches) high. The weight of a liter of dry air at 0° C. and 760 mm. is 1.293 gm.

**122. Ingredients of the Atmosphere.** — The atmosphere is a mixture of several gases. Oxygen, nitrogen, and argon are the three ingredients that are always present in nearly constant proportions. Variable proportions of water vapor and carbon dioxide gas are always found, and also small quantities of compounds related to ammonia and nitric acid. Near cities the atmosphere may contain considerable dust, sulphur compounds, and acids; in the country ozone is usually present, and at the ocean some salt is often found.

**123. Air is a Mixture.** — Chemical compounds have a constant composition, i.e. the constituents are united in a proportion which is always the same in the case of a given compound (**59**). Furthermore, we have seen that chemical action results in the formation of one or more new compounds, and that this action is usually accompanied by heat changes. The following facts show that air is a mixture of free gases: —

(1) The proportion of oxygen and of nitrogen is not fixed, but varies between small limits.

(2) When nitrogen and oxygen are mixed in the proportions that form air, the product is exactly like air, but the act of mixing gives no evidence of chemical action.

(3) When air is dissolved in water, a larger proportion of oxygen than nitrogen dissolves. If the oxygen and nitrogen were combined, the dissolved air would contain the same proportions of oxygen and nitrogen as air itself.

**124. Proportions of the Constant Ingredients of Air.** — For many years it was believed that pure air consisted

solely of oxygen and nitrogen. But in 1894 it was found that nearly 1.2 per cent (by volume) of the gas hitherto called nitrogen is argon (**129**). The normal proportions (by volume) of the constant ingredients of air are nitrogen 78.122, oxygen 20.941, argon .937.

**125. Volumetric Composition of Air.** — Although air is a mixture, we usually speak of its "composition." However, the proportions of the main ingredients of air are so nearly constant, chemists have fallen into the habit of applying the term *composition* to air. The proportion of oxygen in the air can be found by several methods. In one, a known volume of air is shaken in a closed bottle with a mixture of pyrogallic acid and potassium hydroxide; this solution absorbs the oxygen and leaves the nitrogen and argon unchanged. (See Part II, Exp. **57**.) In another, a graduated glass tube, containing a known volume of air is inverted in a jar of water, and a piece of phosphorus attached to a wire is introduced into the tube. White fumes of phosphorus pentoxide indicate immediate action. They soon dissolve in the water, which rises higher in the tube, as the oxygen combines with the phosphorus. In a few hours the phosphorus is removed, and the volume of gas is read. The difference between the first and last volumes is oxygen.

**126. Oxygen and Nitrogen in the Atmosphere.** — The chemical activity of the atmosphere is due to the free oxygen it contains. Nitrogen is inactive, and if the atmosphere contained much more than the normal amount, the chemical activity of the oxygen would be too much retarded. To be serviceable to man, oxygen must be accompanied by the proper proportion of nitrogen.

**127. Water Vapor in the Atmosphere.** — Water vapor is always present in the atmosphere, owing to constant evaporation from the ocean and other bodies of water. When the temperature of the atmosphere falls, the water vapor condenses and is deposited in the form of dew, rain, fog, mist, frost, snow, sleet, or hail. The clouds are

THIS PAGE IS LOCKED TO FREE MEMBERS
Purchase full membership to immediately unlock this page

HISTORY

Tens of thousands of important historical sources, many previously unobtainable, are now available for the first time with a Forgotten Books Full Membership.

Unlimited Access
$8.99/month

Continue

*Fair usage policy applies

thin, white crust of insoluble calcium carbonate on the surface of the liquid. If considerable air is drawn through the calcium hydroxide solution, the liquid becomes milky, because the particles of calcium carbonate are suspended in the liquid. The equation for the interaction of carbon dioxide and calcium hydroxide is —

$$\underset{\text{Carbon Dioxide}}{CO_2} + \underset{\text{Calcium Hydroxide}}{Ca(OH)_2} = \underset{\text{Calcium Carbonate}}{CaCO_3} + \underset{\text{Water}}{H_2O}$$

## Argon

**129. Argon in the Atmosphere.** — Argon, as stated above, is an essential and constant ingredient of the atmosphere, the proportion being .937 per cent by volume. Argon was detected and first studied in 1894 by Rayleigh and Ramsay. Rayleigh found that nitrogen extracted from air had a greater weight than an equal volume of nitrogen obtained from compounds of nitrogen. Consequently, they believed that the nitrogen from air contained another gas hitherto overlooked. Experiments showed that after the oxygen and nitrogen were removed from purified air, there still remained a small quantity of a new gas. They named it argon and gave it the symbol A.

Argon can be obtained by passing pure air over heated copper to remove the oxygen, and then the remaining gas over heated magnesium or calcium to remove the nitrogen. Another method consists in passing electric sparks through a mixture of air and oxygen, and absorbing the oxides of nitrogen in potassium hydroxide solution. The latter method is a repetition of the one used by Cavendish in 1785 when he determined the composition of air. He observed and recorded the fact that a small bubble of gas always remained; it was doubtless argon, and to Cavendish belongs the honor of first observing this element.

**130. Properties of Argon.** — Argon is a colorless, odorless gas which is a little heavier than oxygen. It dis-

solves in water to the extent of about 4 volumes in 100. It has been liquefied and solidified; the boiling point of liquid argon is $-186°$ C. and the melting point of the solid (which is colorless) is $-189.5°$ C. A conspicuous property of argon is its lack of chemical activity. No compounds of this element have as yet been prepared or discovered. The name *argon* is happily chosen, being derived from Greek words signifying inert.

**131. Rare Gases in the Atmosphere.** — Helium (He), neon (Ne), krypton (Kr), and xenon (Xe) are inert gases discovered by Ramsay subsequently to argon. With the exception of neon they constitute an exceedingly minute proportion of the atmosphere. Like argon they do not form compounds. Ramsay estimates that in 1,000,000 parts of the atmosphere there are 1 to 2 parts of helium, 10 to 20 of neon, .05 of krypton, and .006 of xenon. Helium was detected in the atmosphere of the sun by Lockyer in 1868. It was found by Ramsay, soon after he discovered argon, in the gases expelled from certain rare minerals and in the gas and water of some mineral springs. Recently it has become conspicuous as one of the disintegration products of radium (**529**).

## Liquid Air

**132. Liquid air** is a mixture of the liquefied gases that constituted the air used. It is a milky liquid, owing to the presence of solid carbon dioxide and ice. If these solids are removed by filtering, the filtrate has a pale blue tint. It boils at about $-190°$ C. under atmospheric pressure. If an ordinary vessel is filled with liquid air, the latter boils vigorously, the surrounding air becomes intensely cold, frost gathers on the vessel, and in a short time the liquid air will have entirely disappeared into the air of the room. If, however, liquid air is placed in a Dewar flask, evaporation takes place so slowly that some liquid air will remain in the flask several days.

A Dewar flask (Fig. 31) consists of two flasks, one within the other, sealed together air-tight at the top; the space between the flasks is a vacuum. The surfaces of the flasks are coated with silver, which reflects heat and helps retard the evaporation of the liquid air. Liquid air is stored and transported in Dewar flasks.

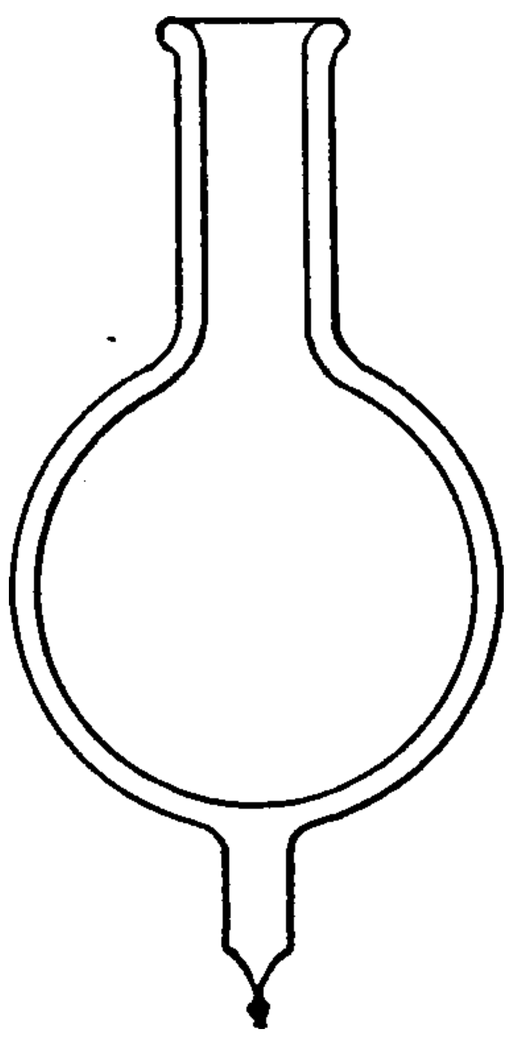

Fig. 31. — A Dewar flask

**133. Changes produced by Liquid Air.** — Liquid air, owing to its extremely low temperature, produces remarkable physical changes. A tin or iron vessel which has been cooled by liquid air is so brittle that it may often be crushed with the fingers. Mercury freezes so hard in liquid air, that it may be used as a hammer to drive a nail. When liquid air is put in a teakettle standing on a block of ice, the liquid air boils vigorously. If the kettle of liquid air is placed over a lighted Bunsen burner, frost and ice collect on the bottom of the kettle, because the intense cold produced by the evaporation of the liquid air in the kettle solidifies the water vapor and carbon dioxide, which are the two main products of burning illuminating gas. If water is now poured into the kettle, the liquid air boils over and the water is instantly frozen; the water is so much hotter than the liquid air that the latter boils more violently, and since its rapid evaporation causes the absorption of heat, the water gives up its heat and becomes ice. Ordinary liquid air is from one half to one fifth liquid oxygen, and will support combustion. A red-hot rod of steel or of carbon burns brilliantly in this cold liquid.

**134. Numerous applications** of liquid air have been proposed, and some have passed the experimental stage. It is used for removing diseased flesh from a wound, and as a commercial source of oxygen and nitrogen. The last use is based primarily on the

THIS PAGE IS LOCKED TO FREE MEMBERS
Purchase full membership to immediately unlock this page

Get Smart

Over 2,000 years of human knowledge in 797,885 volumes

Instant access $8.99/month

Continue

*Fair usage policy applies

**4.** What is the weight at 0° C. and 760 mm. of (*a*) 1000 cc. of dry air? Of (*b*) 95 l., (*c*) 95 cc., (*d*) 95 cu. m.?

**5.** One liter of air under standard conditions weighs 1.293 gm. What is the weight of 2.5 liters when the barometer stands at 755 mm.?

**6.** What volume would 10 l. of air at 25° C. occupy at 0° C.? (Pressure unchanged.)

**7.** How many cc. will 1 gm. of air occupy? (Standard conditions.)

**8.** A flask weighed 130 grams when full of air, and 129.84 grams when some of the air was sucked out. When opened under water 125 cc. of water entered. Find the weight of a liter of air.

# CHAPTER XII

## GAY-LUSSAC'S LAW OF GAS VOLUMES — AVOGADRO'S HYPOTHESIS — MOLECULAR WEIGHTS AND ATOMIC WEIGHTS — MOLECULAR FORMULAS AND EQUATIONS

Atomic weights and molecular weights have been used freely in the foregoing pages. In the present chapter, after discussing Gay-Lussac's law and Avogadro's hypothesis, we shall consider the methods by which these weights are determined.

**136. Gay-Lussac's Law of Gas Volumes.** — We have already seen that gases combine by volume in simple ratios. These results may be summarized in a —

TABLE OF THE COMBINATION OF GASES BY VOLUME

| Volumes of Combining Gases | Volumes of Gaseous Product |
|---|---|
| 2 volumes of hydrogen<br>1 volume of oxygen | 2 volumes of water vapor |
| 1 volume of chlorine<br>1 volume of hydrogen | 2 volumes of hydrogen chloride |
| 3 volumes of hydrogen<br>1 volume of nitrogen | 2 volumes of ammonia gas |
| 2 volumes of nitrogen<br>1 volume of oxygen | 2 volumes of nitrous oxide gas |
| 1 volume of nitrogen<br>1 volume of oxygen | 2 volumes of nitric oxide gas |

It is clear from the above table that in the case of these gases small whole numbers express the relation existing between the volumes of the combining gases and the volume of the gaseous product. The simple ratio that exists between the gas volumes (tabulated above), whether components or products, is true of all gases. This general fact was summarized in 1808 by the French chemist Gay-Lussac in the form of a **law**, thus: —

*Gases combine in volumes which bear a simple numerical ratio to each other and to the volume of their gaseous product.*

By a "simple numerical ratio" is meant one involving only small whole numbers.

**137. Avogadro's Hypothesis.** — In 1811 the Italian physicist Avogadro proposed an explanation of the simple numerical relation of gas volumes. It is usually called **Avogadro's hypothesis** and may be stated thus: —

*Equal volumes of all gases at the same temperature and pressure contain approximately the same number of molecules.*

This statement means, for example, that a liter of oxygen, a liter of hydrogen chloride, of nitric oxide, or of any other gas, at the same temperature and pressure, contains very nearly the same number of molecules.

**138. Relative Weights of Molecules.** — By means of Avogadro's hypothesis we can find the relative weights of molecules. Let us take the case of oxygen and carbon dioxide. A liter of carbon dioxide weighs 1.977 gm. and a liter of oxygen 1.429 gm. at the same temperature and pressure, i.e. the weight of a liter of carbon dioxide is approximately 1.38 times that of a liter of oxygen. Hence according to Avogadro's hypothesis the weight of the carbon dioxide molecules is about 1.38 times the weight of the oxygen molecules.

THIS PAGE IS LOCKED TO FREE MEMBERS
Purchase full membership to immediately unlock this page

HISTORY

Tens of thousands of important historical sources, many previously unobtainable, are now available for the first time with a Forgotten Books Full Membership.

Unlimited Access
$8.99/month

Continue

*Fair usage policy applies

100 molecules of Oxygen + 100 molecules of Nitrogen
= 200 molecules of Nitric Oxide.

Now, since every molecule of nitric oxide contains at least one atom each of oxygen and nitrogen, the 200 molecules must contain at least 200 atoms of oxygen. But the 200 atoms of oxygen were provided by the 100 molecules of oxygen. Therefore, each molecule of oxygen must contain at least two atoms. There is conclusive evidence (based on certain physical properties of gases when heated) that the oxygen molecule contains only two atoms.

The method of determining the approximate molecular weight of a substance is now clear. It is only necessary to find the vapor density on the oxygen basis and multiply this value by 32. That is: —

Molecular Weight = Vapor Density referred to Oxygen $\times 32$.

Thus, since the vapor density of carbon dioxide is 1.38, its approximate molecular weight is $1.38 \times 32$, or 44.16.

Some substances cannot be vaporized without decomposition. The molecular weights of such substances cannot, of course, be found by the vapor density method. If a substance dissolves without decomposition, the molecular weight of the dissolved substance can be determined by an appropriate method (**162**). No experimental method is known for determining the molecular weight of a substance in the solid state (i.e. not dissolved or vaporized); it is customary to assume that the molecular weight of such substances is the sum of the atomic weights in the simplest formula.

**140. Determination of Approximate Atomic Weights.** — The approximate atomic weight of an element is determined from the molecular weights of its compounds. We have already seen that molecular weights can be found by multiplying the vapor density by 32. Molecular

weights thus determined are approximate, because Avogadro's hypothesis is approximate; that is, they are not exactly (though often very nearly) equal to the sum of the exact weights of the atoms in one molecule. For example, the approximate molecular weight of carbon dioxide is 44.16 (**139**), whereas the exact weight is 44.00. Hence atomic weights derived from molecular weights are approximate. Subsequently the method of finding exact atomic weights will be discussed (**141**).

After the molecular weights of compounds have been determined, the next problem is to find what parts of the molecular weights should be chosen as the atomic weights of the elements that constitute the compounds. The steps in the procedure are: First, determine the molecular weights of several compounds of these elements; second, find by analysis the per cent of each element in the compounds; third, find the weight of each element in this molecular weight by multiplying the molecular weight of each compound by the per cent of the elements in the compound. The minimum value obtained in the case of each element will be the approximate atomic weight. The numerical results obtained from a study of the elements oxygen, hydrogen, chlorine, nitrogen, and carbon are shown in the table on page 118, in which, for the sake of simplicity, whole numbers are used (except in the case of chlorine).

In this table, columns one and two contain the names of the compounds and their approximate molecular weights. The other columns contain the parts of the molecular weights that belong to the atoms of the elements in a molecule of the compound. These values are obtained by the third step in the procedure. For example, the procedure in the case of water is as follows: (1) by experi-

## Determination of Approximate Atomic Weights

| Compound | Molecular Weight | Weight of Oxygen | Weight of Hydrogen | Weight of Chlorine | Weight of Nitrogen | Weight of Carbon |
|---|---|---|---|---|---|---|
| Water | 18 | 16 | 2 | — | — | — |
| Hydrogen Dioxide | 34 | 32 | 2 | — | — | — |
| Hydrogen Chloride | 36.5 | — | 1 | 35.5 | — | — |
| Ammonia | 17 | — | 3 | — | 14 | — |
| Nitric Acid | 63 | 48 | 1 | — | 14 | — |
| Nitrous Oxide | 44 | 16 | — | — | 28 | — |
| Nitric Oxide | 30 | 16 | — | — | 14 | — |
| Nitrogen Dioxide | 46 | 32 | — | — | 14 | — |
| Carbon Monoxide | 28 | 16 | — | — | — | 12 |
| Carbon Dioxide | 44 | 32 | — | — | — | 12 |
| Methane | 16 | — | 4 | — | — | 12 |
| Ethylene | 28 | — | 4 | — | — | 24 |
| Acetylene | 26 | — | 2 | — | — | 24 |
| Ether | 74 | 16 | 10 | — | — | 48 |
| Ethyl Alcohol | 46 | 16 | 6 | — | — | 24 |
| Chloroform | 119.5 | — | 1 | 106.5 | — | 12 |
| Carbon Tetrachloride | 154 | — | — | 142 | — | 12 |
| Cyanogen Chloride | 61.5 | — | — | 35.5 | 14 | 12 |
| Minimum weight of each element | | 16 | 1 | 35.5 | 14 | 12 |

ment the approximate molecular weight of water vapor is found to be 18; (2) by analysis the compound is shown to contain 88.82 per cent oxygen and 11.18 per cent hydrogen; and (3) the products of 18 and these percentages are 16 and 2 respectively. An examination of the weights of the elements show (1) that the minimum weight in each column is O = 16, H = 1, Cl = 35.5, N = 14, and C = 12, and (2) that the other weights are simple multiples. These facts are significant. The smallest weights must be the weights of single atoms, for it is highly probable that one or more compounds in a repre-

THIS PAGE IS LOCKED TO FREE MEMBERS
Purchase full membership to immediately unlock this page

Get Smart

Over 2,000 years of human knowledge in 797,885 volumes

Instant access $8.99/month

Continue

*Fair usage policy applies

$$28.26299 - 21.27143 = 6.99156$$

| Wt. of silver | : | Wt. of chlorine | :: | At. wt. of silver | : | At. wt. of chlorine |
|---|---|---|---|---|---|---|
| 21.27143 | : | 6.99156 | :: | 107.880 | : | x |

$$x = 35.458$$

The international atomic weight (35.46) is based on this and other determinations made by the same chemist.

The exact determination of atomic weights is a difficult task. And although the utmost care is used in purifying the chemicals and performing the analysis, the results of different experimenters do not always exactly agree. Therefore an international committee was chosen several years ago to select the most accurate atomic weights of the elements. These weights are embodied in a table published annually and called the International Table of Atomic Weights. The table is given on the inside of the back cover of this book. In this table the accepted atomic weights are placed in one column and the approximate values in another. The approximate atomic weights are sufficiently accurate for general reference and in making chemical calculations; they may be used in solving the problems in this book.

**142. Formulas of Molecules of Compounds.** — A formula expresses composition, that is, it represents by means of symbols the kind and number of atoms in a molecule. This means, of course, that the sum of the weights represented by the atoms in a molecule must equal approximately the molecular weight of the substance found by experiment. Let us take two illustrations. (1) Analysis shows that the ratio of hydrogen to chlorine in hydrogen chloride is 1 to 35.5, and a supplementary experiment shows that the molecular weight of hydrogen chloride is approximately 36.7. Therefore, the formula of a molecule of hydrogen chloride is HCl, first, because this

expression represents the ratio found by analysis (1 : 35.5), and second, because the molecular weight found by experiment (36.7) is approximately the sum of the weights of the atoms (1 + 35.5 = 36.5) in a molecule. (2) Experiment shows that the ratio of hydrogen to oxygen in hydrogen dioxide is 1 to 16, and that the molecular weight is approximately 34. Now HO would correctly express the composition of hydrogen dioxide as found simply by analysis, because H and O represent the ratio 1 to 16. But the molecular weight represented by HO is 17 (i.e. 1 + 16), which is only half of the approximate molecular weight found by experiment. Therefore $H_2O_2$, not HO, must be the correct molecular formula of hydrogen dioxide, because $H_2O_2$ expresses not only the ratio (1 : 16) but also the molecular weight (34).

In a previous section (**68** (1)) it was shown that the **simplest formula** of a compound can be readily calculated from the percentage composition, viz. by dividing the per cent of each element in the compound by the atomic weight (and, if necessary, reducing the quotients to the smallest whole numbers). That is, we can transform the percentages found by analysis into numbers which express the atomic relations by distributing the proportional parts among the elements according to that method of expressing composition adopted in chemistry. Formulas thus calculated, however, are not necessarily molecular formulas. (1) If the molecular weight of a compound cannot be found by experiment, then the simplest formula is accepted as the molecular formula. For example, according to analysis, a compound contains 40 per cent of calcium, 12 of carbon, and 48 of oxygen. Dividing each per cent by the proper atomic weight, we have: — 40 ÷ 40 = 1, 12 ÷ 12 = 1, 48 ÷ 16 = 3. That is, one molecule of

this compound contains (at least) one atom each of calcium and carbon, and three of oxygen, and the simplest formula is $CaCO_3$. This is also accepted as its molecular formula, because the molecular weight cannot be found by any method known at present. (2) If, however, the molecular weight can be found (by means of the vapor density), the **molecular formula** can be readily calculated. For example, a compound was found by analysis to contain 92.3 per cent of carbon and 7.7 of hydrogen, and to have a vapor density of 2.4375. Proceeding as above, we have $92.3 \div 12 = 7.7$, and $7.7 \div 1 = 7.7$. Since 7.7 : 7.7 as 1 : 1, the compound contains at least one atom each of carbon and hydrogen, and would have the formula CH, if nothing were known about its molecular weight. The vapor density 2.4375 requires the molecular weight 78 (i.e. $2.4375 \times 32$), which is six times the weight (13) corresponding to the formula CH. Hence the molecular formula of this compound is not CH, but $C_6H_6$.

To recapitulate regarding molecular formulas of compounds: The **simplest formula** of a compound is found by dividing the per cent of each element by its atomic weight and reducing these quotients to the smallest whole numbers (if necessary); if the molecular weight cannot be found by experiment, this formula is accepted as the molecular formula. The **molecular formula** of a compound is found by three steps: (*a*) Find the simplest formula, (*b*) divide the molecular weight by the sum of the weights of the atoms in the simplest formula, (*c*) multiply the integral numbers of the simplest formula by the quotient obtained in (*b*).

**143. Molecular Weights and Molecular Formulas of Elements.** — Several elements are gases at ordinary tem-

THIS PAGE IS LOCKED TO FREE MEMBERS
Purchase full membership to immediately unlock this page

HISTORY

Tens of thousands of important historical sources, many previously unobtainable, are now available for the first time with a Forgotten Books Full Membership.

Unlimited Access
$8.99/month

Continue

*Fair usage policy applies

Since the reaction is between gases and the molecular formula of hydrogen is $H_2$ and of oxygen is $O_2$, the equation can be written: —

$$2H_2 + O_2 = 2H_2O$$

This equation is read thus: Two molecules of hydrogen unite with one molecule of oxygen to form two molecules of water vapor. Since this equation correctly represents the interacting substances as molecules, the equation is called a **molecular equation.** It should be noted that the proportions by weight are the same as in the simpler or atomic form of the equation. Molecular equations are sometimes called **volume equations** or **gas equations,** because they show the volumes of gases involved in the reaction. Thus, the equation

$$H_2 + Cl_2 = 2HCl$$

may be written —

$$\underset{\text{1 volume}}{H_2} + \underset{\text{1 volume}}{Cl_2} = \underset{\text{2 volumes}}{2HCl}$$

because equal numbers of molecules represent equal volumes (**137**). This equation is read: One volume of hydrogen and one volume of chlorine form two volumes of hydrogen chloride. It should be remembered, then, that in molecular or volume equations a single molecule represents one volume of a gas (or vapor).

## EXERCISES

**1.** State and illustrate (*a*) Gay-Lussac's law and (*b*) Avogadro's hypothesis.

**2.** What is the relation of the molecular weight of a gas to (*a*) the molecular and (*b*) the atomic weight of oxygen?

**3.** (*a*) State the argument proving that a molecule of oxygen consists of at least two atoms. (*b*) Apply the same argument to nitrogen.

**4.** Hydrogen and nitrogen combine in the ratio of 3 to 1 to form 2 vol-

umes of ammonia. Show from this relation that a molecule of nitrogen contains at least two atoms.

**5.** What is the relation between molecular weight and vapor density? Illustrate your answer.

**6.** Why is the formula of water vapor $H_2O$ and not HO or $H_2O_2$?

**7.** How are molecular weights determined?

**8.** How are approximate atomic weights found from molecular weights?

**9.** What is a molecular formula? What is the molecular formula of oxygen, nitrogen, chlorine, hydrogen, zinc, iodine, sulphur, mercury, phosphorus, sodium, potassium, argon, helium? How is a molecular formula determined? Illustrate your answer.

**10.** Write the chemical expression for: (*a*) one atom, three atoms, one molecule, and three molecules of hydrogen, of zinc, and of phosphorus, and (*b*) one molecule of water, three molecules of water.

**11.** Explain fully: O, $O_2$, $O_3$, $3O_2$, $2O_3$, $KClO_3$, $4P$, $2P$, $P_4$, $P_2$, $2P_4$, $4P_2$, $P_2O_5$, Hg, HgO, Zn, $2Zn$, Na, $2Na$, $Na_2O$, $Na_3AlO_3$, C, CO, $CO_2$, $C_{12}H_{22}O_{11}$.

**12.** Express the following by an equation: One volume of phosphorus vapor and six volumes of chlorine form four volumes of phosphorus trichloride ($PCl_3$) vapor.

## PROBLEMS

**1.** 1,000,000 molecules of hydrogen will unite with how many molecules of oxygen to form how many molecules of water vapor? What will be the relative weights of hydrogen and water vapor?

**2.** A liter of sulphurous oxide gas ($SO_2$) weighs 2.8672 gm. What is the molecular weight of this compound?

**3.** Sodium chloride contains 39.32 per cent of sodium, and its molecular weight is 58.5. What is the atomic weight of sodium, if there is but one atom of sodium in a molecule of the salt?

**4.** Calculate the atomic weight of phosphorus from the following data: In 100 parts of phosphoric oxide there are 43.66 parts of phosphorus and 56.34 of oxygen. Each molecule contains seven atoms, two of phosphorus and five of oxygen.

**5.** (*a*) By a certain method the atomic weight of copper might be either 63.1 or 126.2. The specific heat of copper is .093. Which value is probably the atomic weight of copper? (*b*) Similarly, the values for arsenic are 74.8 and 149.6. The specific heat of arsenic is .082. Which weight is probably correct?

**6.** Determine the atomic weight of nitrogen from the following analyses: (*a*) A compound having a molecular weight of 65 is 21.539 per cent nitrogen. (*b*) Similarly 101 and 13.861. (*c*) 63 and 22.222. (*d*) 44 and 63.63.

**7.** If 2 gm. of potassium chloride yield 3.84 gm. of silver chloride, calculate the atomic weight of potassium.

# CHAPTER XIII

## VALENCE — EQUIVALENT WEIGHT

**145. Valence of Atoms and Groups of Atoms.**— Formulas obtained by the methods discussed in Chapter XII show certain regularities. Let us take as examples the following groups:—

### I. Hydrogen Compounds

| | | | |
|---|---|---|---|
| $HCl$ | $H_2O$ | $NH_3$ | $CH_4$ |
| $HBr$ | $H_2S$ | $PH_3$ | $SiH_4$ |

### II. Oxides

| | | | | | |
|---|---|---|---|---|---|
| $Na_2O$ | $CuO$ | $Al_2O_3$ | $SO_2$ | $P_2O_5$ | $SO_3$ |
| $K_2O$ | $MgO$ | $P_2O_3$ | $CO_2$ | $As_2O_5$ | $CrO_3$ |

### III. Acids and Salts

| | | | |
|---|---|---|---|
| $HCl$ | $HNO_3$ | $H_2SO_4$ | $H_3PO_4$ |
| $NaCl$ | $NaNO_3$ | $Na_2SO_4$ | $Na_3PO_4$ |
| $CaCl_2$ | $Ca(NO_3)_2$ | $CaSO_4$ | $Ca_3(PO_4)_2$ |
| $AlCl_3$ | $Al(NO_3)_3$ | $Al_2(SO_4)_3$ | $Al_2(PO_4)_3$ |

### IV. Bases

| | | |
|---|---|---|
| $NaOH$ | $Ca(OH)_2$ | $Al(OH)_3$ |
| $KOH$ | $Ba(OH)_2$ | $Bi(OH)_3$ |

These groups might be greatly extended. Careful comparison of these and many other formulas leads to two conclusions. (1) Atoms of elements differ in the number

THIS PAGE IS LOCKED TO FREE MEMBERS
Purchase full membership to immediately unlock this page

Get Smart

Over 2,000 years of human knowledge in 797,885 volumes

Instant access $8.99/month

Continue

*Fair usage policy applies

## Table A — Valence of Certain Elements

| Name | Symbol | Valence | Name | Symbol | Valence |
|---|---|---|---|---|---|
| Aluminium | Al | III | Iron (ous) | Fe | II |
| (Ammonium) | $(NH_4)$ | I | Iron (ic) | Fe | III |
| Antimony (ous) | Sb | III | Lead | Pb | II |
| Antimony (ic) | Sb | V | Magnesium | Mg | II |
| Arsenic (ous) | As | III | Mercury (ous) | Hg | I |
| Arsenic (ic) | As | V | Mercury (ic) | Hg | II |
| Barium | Ba | II | Phosphorus (ous) | P | III |
| Bismuth | Bi | III | Phosphorus (ic) | P | V |
| Calcium | Ca | II | Potassium | K | I |
| Carbon | C | IV | Radium | Ra | II |
| Chromium | Cr | III | Silicon | Si | IV |
| Copper (ous) | Cu | I | Silver | Ag | I |
| Copper (ic) | Cu | II | Sodium | Na | I |
| Gold (ous) | Au | I | Tin (ous) | Sn | II |
| Gold (ic) | Au | III | Tin (ic) | Sn | IV |
| Hydrogen | H | I | Zinc | Zn | II |

## Table B — Valence of Certain Radicals

| Group Name of Compound | Symbol or Formula | Valence | Group Name of Compound | Symbol or Formula | Valence |
|---|---|---|---|---|---|
| Acetate | $C_2H_3O_2$ | I | Iodide | I | I |
| Bromide | Br | I | Manganate | $MnO_4$ | II |
| Carbide | C | IV | Nitrate | $NO_3$ | I |
| Carbonate | $CO_3$ | II | Nitrite | $NO_2$ | I |
| Carbonate (acid) | $HCO_3$ | I | Oxide | O | II |
| Chlorate | $ClO_3$ | I | Permanganate | $MnO_4$ | I |
| Chloride | Cl | I | Phosphate (ortho) | $PO_4$ | III |
| Chromate | $CrO_4$ | II | Silicate (meta) | $SiO_3$ | II |
| Dichromate | $Cr_2O_7$ | II | Sulphate | $SO_4$ | II |
| Ferricyanide | $Fe(CN)_6$ | III | Sulphate (acid) | $HSO_4$ | I |
| Ferrocyanide | $Fe(CN)_6$ | IV | Sulphide | S | II |
| Fluoride | F | I | Sulphite | $SO_3$ | II |
| Hydroxide | OH | I | Sulphite (acid) | $HSO_3$ | I |

The valence of some elements varies with the combining element and the conditions under which the combination occurred. The valence of most radicals is unvaried. For convenience in learning the valence of radicals and the usual valence of some elements, the valences given in Tables A and B may be rearranged as follows:—

I. Monads — Ag, Au(ous), Br(ide), $C_2H_3O_2$, Cl(ide), $ClO_3$, Cu(ous), F(ide), H, $HCO_3$, $HSO_3$, $HSO_4$, Hg(ous), I, K, $MnO_4$(per), Na, $NH_4$, $NO_2$, $NO_3$, OH.

II. Dyads — Ba, Ca, $CO_3$, $CrO_4$, $Cr_2O_7$, Cu(ic), Fe(ous), Hg(ic), Mg, $MnO_4$(ate), O, Pb, Ra, S(ide), $SO_3$, $SO_4$, $SiO_3$, Sn(ous), Zn.

III. Triads — Al, As(ous), Au(ic), Bi, Cr, Fe(ic), $Fe(CN)_6$(i), P(ous), $PO_4$(o), Sb(ous).

IV. Tetrads — C, C(ide), $Fe(CN)_6$(o), Si, Sn(ic).

V. Pentads — As(ic), P(ic), Sb(ic).

**148. Valence illustrated by Combination and Substitution.** — Elements and atomic groups which have the same valence combine with each other unit for unit. Thus, one atom of sodium combines with one atom of chlorine to form one molecule of sodium chloride; and one $NH_4$-group combines with one atom of chlorine to form one molecule of ammonium chloride. Elements and atomic groups having a different valence usually (**151**) combine with each other so that the total valence of the atoms of each element or group in a molecule is equal. Thus, two atoms of hydrogen (each having the valence I) combine with one of oxygen (having the valence II) to form one molecule of water ($H_2O$); and two atoms of aluminium (each having the valence III) combine with three $SO_4$-groups (each having the valence II) to form one molecule of aluminium sulphate ($Al_2(SO_4)_3$).

Just as atoms and groups of the same valence combine unit for unit, or those of different valence combine so

that the valences of each element or atomic group balance, so also atoms and atomic groups displace each other — unit for unit if the valence is the same, or equivalently if the valence is different. For example, when zinc is substituted for hydrogen in hydrochloric acid, one atom of zinc (having the valence II) displaces two atoms of hydrogen (each having the valence I), and the formula of the resulting zinc chloride is $ZnCl_2$; similarly, one atom of chlorine (having the valence I) displaces one OH-group from sodium hydroxide, and the formula of the resulting sodium chloride is NaCl.

**149. Writing Formulas from Valence.** — Formulas of many compounds may be written by using the tables of valence. Suppose the formula of magnesium chloride is desired. From Table A the valence of magnesium is found to be II, and from Table B the valence of chlorine in chlorides is found to be I. Remembering the rule that in most compounds the total valence of the two parts must be equal, it is necessary to have two atoms of chlorine and one of magnesium; hence the formula is $MgCl_2$. Again, suppose we wish the formula of lead nitrate. From the tables the valence of lead is II and of the $NO_3$-group is I; therefore it is necessary to have two $NO_3$-groups for one atom of lead, and the formula is $Pb(NO_3)_2$. Similarly, the formula of aluminium oxide is $Al_2O_3$, because 2 and 3 are the least number of atoms of Al and O which give equal valence (VI in each case). Formulas of acids may be written by prefixing the correct number of hydrogen atoms to the atom or group selected from Table B. Thus, $HNO_2$ is the formula of nitrous acid, and HBr of hydrogen bromide. (See Exercises at the end of this chapter.)

**150. Multiple Valence.** — Certain elements have two

THIS PAGE IS LOCKED TO FREE MEMBERS
Purchase full membership to immediately unlock this page

HISTORY

Tens of thousands of important historical sources, many previously unobtainable, are now available for the first time with a Forgotten Books Full Membership.

Unlimited Access
$8.99/month

Continue

*Fair usage policy applies

formulas are called **structural** or **graphic formulas,** for they show the probable arrangement of the atoms in molecules. Thus, the graphic formula of nitric acid is usually written , because this arrangement of atoms not only displays the correct valence of each element but it also represents certain facts about nitric acid, e.g. that the hydrogen is not combined directly with nitrogen. Structural formulas are useful, especially in organic chemistry (Chapter XVII), but it must not be forgotten that they are merely representations; the lines are intended to indicate the numerical value of the valence and not the strength of the combination of the atoms.

## Equivalent Weight

**153. Determination of Valence from Atomic and Equivalent Weights.** — The valence of an element is found by dividing its atomic weight by its equivalent weight, that is: —

Valence = Atomic Weight ÷ Equivalent Weight.

The term *equivalent weight* requires explanation. Equivalent weights of the elements are the weights that are chemically equivalent, provided the weights are expressed in terms of the standard, viz. 8 grams of oxygen. In other words, the equivalent weight of an element is the weight that combines with or replaces 8 grams of oxygen. For example, it is found by experiment that magnesium and oxygen combine in the ratio of 60 to 40 respectively (in round numbers). Now if for the 40 we substitute 8, then the 60 becomes 12, that is, 12 is the number of

grams of magnesium that unites with 8 grams of oxygen. Therefore 12 is the equivalent weight of magnesium. Equivalent weights of the elements have been carefully determined by experiment. When the atomic weights are divided by the equivalent weights, the quotient is the valence of the respective elements (Table C).

TABLE C — EQUIVALENT WEIGHTS, ATOMIC WEIGHTS, AND VALENCE

| Element | Equivalent Weight | Atomic Weight | Valence |
|---|---|---|---|
| Oxygen | 8.00 | 16.00 | 2 |
| Aluminium | 9.03 | 27.1 | 3 |
| Bromine | 79.92 | 79.92 | 1 |
| Calcium | 20.035 | 40.07 | 2 |
| Carbon | 3.00 | 12.00 | 4 |
| Chlorine | 35.46 | 35.46 | 1 |
| Copper (ous) | 63.57 | 63.57 | 1 |
| Copper (ic) | 31.785 | 63.57 | 2 |
| Hydrogen | 1.008 | 1.008 | 1 |
| Iron (ous) | 27.92 | 55.84 | 2 |
| Iron (ic) | 18.62 | 55.84 | 3 |
| Magnesium | 12.16 | 24.32 | 2 |
| Mercury (ous) | 200.6 | 200.6 | 1 |
| Mercury (ic) | 100.3 | 200.6 | 2 |
| Potassium | 39.10 | 39.10 | 1 |
| Silver | 107.88 | 107.88 | 1 |
| Sodium | 23.00 | 23.00 | 1 |
| Sulphur | 16.035 | 32.07 | 2 |
| Zinc | 32.685 | 65.37 | 2 |

**154. Equivalent Weights and their Determination.** — The list of equivalent weights given above might be extended to include all the elements which form compounds. These numbers are sometimes called combining numbers, combining weights, or simply equivalents. The term *equivalent weights* is preferable, because they

actually are the weights chemically equivalent to each other. Thus, if we start with hydrogen chloride (HCl), 1.008 gm. of hydrogen — to take a convenient denomination — combines with 35.46 gm. of chlorine, and this 1.008 gm. of hydrogen can be replaced chemically by 32.685 gm. of zinc, 12.16 gm. of magnesium, 39.10 gm. of potassium, or 23.00 gm. of sodium, and so on. These elements are chemically equivalent in the ratio of these weights.

Equivalent weights can be readily found by experiment, though the equivalent weight is not always found directly in terms of oxygen. The equivalent weight of magnesium can be found by heating a known weight of magnesium in the air, taking care, of course, not to lose the product. The interaction of metals and acids provides a simple method of finding the equivalent weights of zinc, magnesium, aluminium, and iron; the interaction of water with sodium and with calcium permits the determination of the equivalent weights of these metals; and the displacement of metals from solutions of their compounds by zinc provides another general method. Illustrations: Suppose .4188 gm. of iron liberated 186 cc. of hydrogen at 20° C. and 754.5 mm. The volume of hydrogen is 168 cc., when reduced to standard conditions (Chapter IV); its weight is .015 gm. (i.e. .168 × .0898). Therefore .4188 : .015 :: x : 1, x = 27.92, which is the equivalent of iron (ous). Again suppose 4.085 gm. of zinc combine with 1 gm. of oxygen to form zinc oxide. The proportion is 4.085 : 1 :: x : 8, or x = 32.68, which is the equivalent of zinc.

## EXERCISES

**1.** Select three formulas and illustrate valence by them.

**2.** State the fundamental rule for writing formulas from valence.

**3.** Write the formula of the chloride of potassium, sodium, silver, copper (ous), copper (ic), mercury (ous), mercury (ic), iron (ous), iron (ic), zinc, tin (ous), tin (ic), calcium, barium, magnesium, bismuth, aluminium, ammonium, lead. (Use Valence Tables.)

**4.** Write the formula of the sulphate of K, Na, Ag, Cu, Fe (ous), Zn, Pb, Ca, Ba, Mg, Cr, Al, $NH_4$. (Use Valence Tables.)

**5.** Write the formulas of the following compounds and indicate the valence of each element or radical by Roman numerals: ammonium fluoride,

THIS PAGE IS LOCKED TO FREE MEMBERS
Purchase full membership to immediately unlock this page

Get Smart

Over 2,000 years of human knowledge in 797,885 volumes

Instant access $8.99/month

Continue

*Fair usage policy applies

# CHAPTER XIV

## SOLUTION — ACIDS, BASES, AND SALTS

**155. Introduction.** — Many properties of solutions and the general properties of acids, bases, and salts have already been studied (**42–51, 90–94**); considerable attention has also been given to certain examples of acids, bases, and salts, viz. hydrochloric and nitric acids, ammonium hydroxide, chlorides and nitrates (**82–89, 105–113**). In the present chapter we shall discuss more fully the properties of acids, bases, and salts, and continue the consideration of solutions, especially the nature of solutions of acids, bases, and salts.

**156. Behavior of Solutions toward an Electric Current.** — Water itself conducts electricity very slightly indeed. Therefore, if substances are dissolved in water and the solutions are subjected to the action of an electric current, it can be readily found what substances are **electrolytes** and what are **non-electrolytes,** i.e. what substances form conducting solutions and what form non-conducting. The apparatus shown in Fig. 32 may be used for this experiment. It consists of a battery (A) and an electric bell (B) connected with

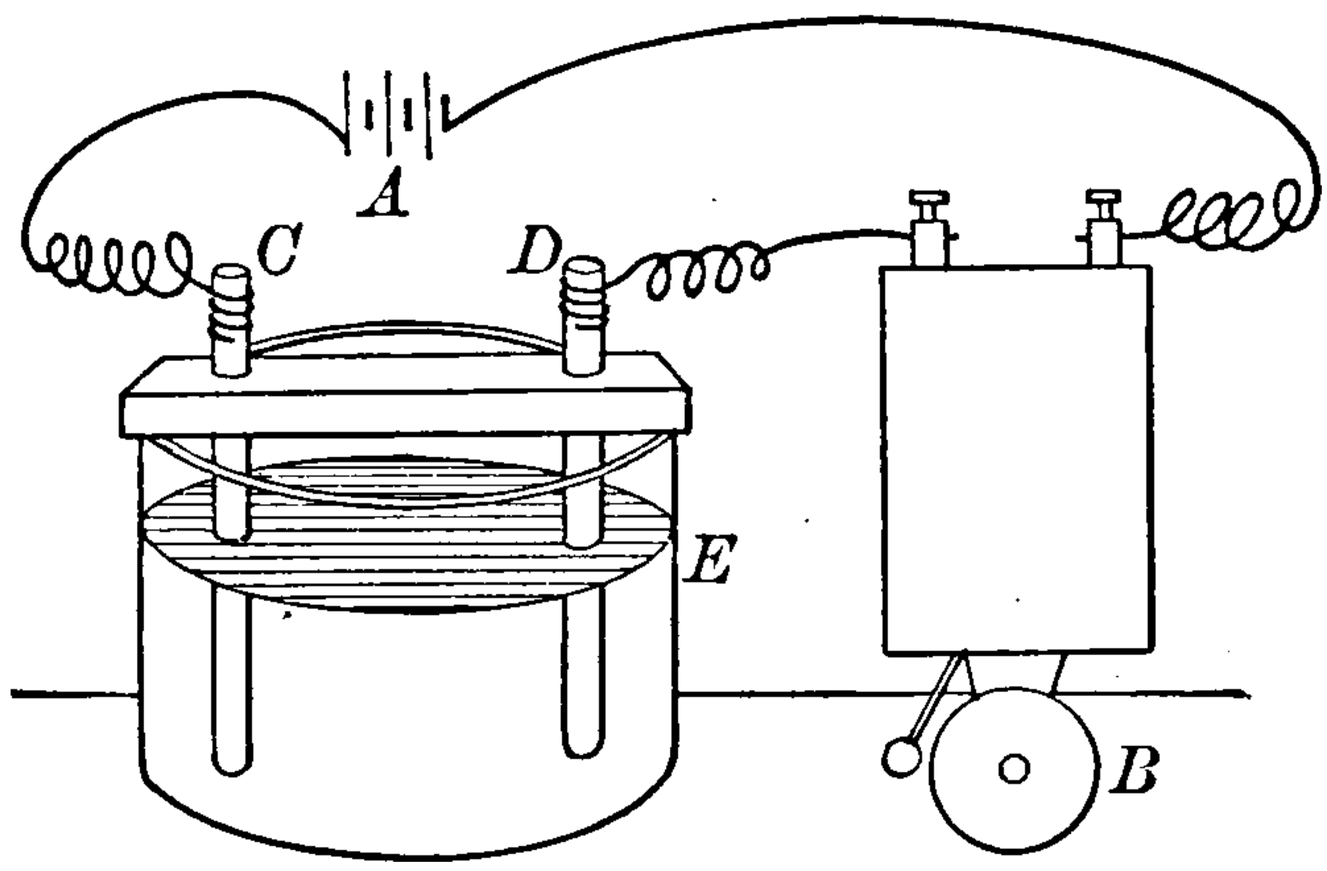


Fig. 32. — Apparatus for Showing the Behavior of Solutions toward an Electric Current.

pieces of carbon (C, D), called **electrodes,** through which the electric current enters and leaves the solution in the vessel (E). One electrode is called the positive (+) electrode or **anode,** and the other the negative (−) electrode or **cathode.** When a current enters the system (battery, bell, solution), the bell rings only when the solution contains an electrolyte. Experiment shows that only acids, bases, and salts are electrolytes. Among non-electrolytes are sugar, alcohol, chloroform, and glycerin. (See Part II, Exp. **72.**)

**157. Theory of Electrolytic Dissociation.** — A theory was proposed in 1887 by the Swedish physicist Arrhenius to explain the properties of dilute solutions. It is called the **theory of electrolytic dissociation** and may be stated as follows: —

*When acids, bases, and salts are dissolved in water, their molecules dissociate to a varying degree into independent particles charged with electricity.*

This theory means that a solution of sodium chloride, for example, consists of water throughout which are distributed some molecules of sodium chloride together with electrically-charged particles into which the remaining molecules of sodium chloride have dissociated.

**158. The Theory Expanded and Terms Defined.** — The dissociation of acids, bases, and salts when in aqueous solution is called electrolytic dissociation or **ionization.** The independent particles that are charged with electricity are called **ions.** Each ion is a portion of a molecule and, as we have said, is charged with electricity. Two kinds of ions are present in every electrolytic solution, viz. electro-positive ions, or **cations,** and electro-negative ions, or **anions.** Ions, although formed by the dissociation of molecules, are not identical with atoms, but differ mainly

in having a charge of electricity. For example, in a solution of sodium chloride the electro-positive sodium ions move about in the water without producing any apparent chemical change; but ordinary sodium interacts violently with water, as we have already seen (**21**). Similarly, the chloride ions circulate freely in water and exhibit none of the effects of gaseous chlorine on water (**53**). **Ions** may be re-defined as electrically charged atoms or atomic groups. It should not be overlooked that the electric charges are on ions into which molecules have dissociated, and are not acquired from the electricity that may subsequently be passed through the solution.

**159. Representation of Ions.** — It is customary to represent ions by chemical symbols supplemented by the sign that designates the kind of electric charge. Thus, the ions formed by the dissociation of sodium chloride are $Na^+$ and $Cl^-$, and of potassium nitrate are $K^+$ and $NO_3^-$. In sodium chloride solution, the number of sodium ions equals the number of chloride ions and the sum of the positive charges on the sodium ions equals the sum of the negative charges on the chloride ions. In the case of calcium chloride ($CaCl_2$), each molecule dissociates into two chloride ions and one calcium ion; but since the sum of each kind of electric charges must be the same, each calcium ion must carry twice the charge which is on each chloride ion. Hence the ions formed by the dissociation of calcium chloride are designated $Ca^{++}$ and $2Cl^-$. (See Table of Ionization, **168**.)

**160. Ionization and Acids, Bases, and Salts.** — As previously stated, only acids, bases, and salts are electrolytes. The general properties of these substances have already been discussed (**90–94**) and their special characteristics are treated under the individual compounds. (See also

THIS PAGE IS LOCKED TO FREE MEMBERS
Purchase full membership to immediately unlock this page

HISTORY

Tens of thousands of important historical sources, many previously unobtainable, are now available for the first time with a Forgotten Books Full Membership.

Unlimited Access
$8.99/month

Continue

*Fair usage policy applies

duced by an alcohol solution of equivalent concentration. These facts are in harmony with the theory of electrolytic dissociation. According to the theory, solutions of non-electrolytes contain only molecules, while solutions of electrolytes contain molecules and ions — the number depending on the substance and the concentration of the solution. Hence the number of independent particles (molecules and ions) in the electrolytic solution is greater than in the non-electrolytic solution. Since ions have the same effect as molecules on the boiling and freezing points of a solution, the larger the number of particles the greater should be the raising of the boiling point and the lowering of the freezing point. Moreover, when molecular weights are determined by the freezing point or the boiling point method, the results still further confirm the theory. Thus, (*a*) the molecular weights of non-electrolytes agree with the values found by other methods, while (*b*) the molecular weights of electrolytes (i.e. acids, bases, and salts) are abnormal, that is, not only do the values of electrolytes disagree with those found by other methods but the values also vary with the concentration of the solution. Therefore, as far as freezing and boiling points are concerned, the theory furnishes an acceptable interpretation of the facts.

**163. Chemical Behavior of Electrolytes in Solution.** — Dry potassium chloride and dry silver nitrate do not interact chemically, but if their solutions are mixed, a precipitate of silver chloride is immediately produced. Furthermore, *any* dissolved chloride will interact in the same way with silver nitrate. Let us interpret these two sets of facts by the theory of electrolytic dissociation. Solutions of potassium chloride and silver nitrate contain

potassium ions ($K^+$), chloride ions ($Cl^-$), silver ions ($Ag^+$), and nitrate ions ($NO_3^-$). Now when certain ions are introduced into the same solution, they seek each other out, so to speak, and combine chemically in accordance with certain fundamental principles of chemical action. Thus, silver ions and chloride ions, if brought into the same solution, always combine to form insoluble silver chloride, which serves as evidence of the chemical change. Obviously, the source of the silver ions and the chloride ions is immaterial. Hence, hydrochloric acid and solutions of chlorides precipitate silver chloride from a solution containing silver ions, whether the silver ions are furnished by silver nitrate, silver sulphate, or any other soluble silver compound. This is the explanation offered by the theory of electrolytic dissociation for the usual test for hydrochloric acid and all soluble chlorides (**89**). The ordinary equation for this test is: —

$$HCl + AgNO_3 = AgCl + HNO_3$$

This equation may be written as an **ionic equation**, thus: —

$$H^+ + Cl^- + Ag^+ + NO_3^- = AgCl + H^+ + NO_3^-,$$

or in a general form as follows: —

$$Cl^- + Ag^+ = AgCl$$

On the other hand, not all dissolved substances interact, even when they are apparently quite similar. Thus, no chemical action is observed when solutions of potassium chlorate and silver nitrate are mixed, despite the fact that the solutions contain ions and that chlorine is a constituent of potassium chlorate. This apparent contradiction is readily explained by the theory. Potassium chlorate solution contains potassium ions ($K^+$) and

chlorate ions ($ClO_3^-$), and when silver nitrate solution is added, the solution contains four kinds of ions, — potassium ions ($K^+$), chlorate ions ($ClO_3^-$), silver ions ($Ag^+$), and nitrate ions ($NO_3^-$). But compounds which might be formed by the various combinations of these ions are soluble. Hence the ions remain uncombined, for the most part, in the solution. Silver nitrate is effective in testing for hydrochloric acid or a soluble chloride, but not for other compounds containing chlorine, such as potassium chlorate ($KClO_3$). Strictly speaking, the test is not for the element chlorine, but for ionic chlorine (i.e. chloride ions); and since the solution of potassium chlorate contains no ionic chlorine, the test fails with this compound. Similarly, the test for sulphuric acid and all soluble sulphates is the formation of insoluble barium sulphate ($BaSO_4$) upon the addition of a solution of barium chloride (or any other soluble barium compound), because the sulphuric acid and sulphate solutions contain sulphate ions ($SO_4^{--}$), which combine with barium ions ($Ba^{++}$) furnished by the soluble barium compound. But this test is not applicable to other sulphur compounds, such as sulphides, sulphites, and thiosulphates, because solutions of these sulphur compounds do not contain sulphate ions. (See Part II, Exps. **66**, **67**, **73**.)

**164. General Properties of Acids, Bases, and Salts — Neutralization.** — Certain properties are exhibited by solutions of each of these classes of compounds. Thus, it will be recalled, acids have a sour taste and turn litmus red, bases have a bitter taste and turn litmus blue, typical salts vary somewhat in taste and in action on litmus, though many are salty and do not change litmus; also acids and bases neutralize each other, that is, interact and form salts and water (**93**). When all these properties are

THIS PAGE IS LOCKED TO FREE MEMBERS
Purchase full membership to immediately unlock this page

Get Smart

Over 2,000 years of human knowledge in 797,885 volumes

Instant access $8.99/month

Continue

*Fair usage policy applies

Burettes are graduated glass tubes and are so marked that any desired portion of the contents can be drawn off by the stop-cock at the lower end. In using burettes for neutralization, one is filled to the mark with a solution of an acid and the other with a solution of a base — one solution being of known concentration. A measured portion, say 15 cubic centimeters of the base, is drawn off into a beaker, a few drops of litmus or phenol-phthalein solution is added, and the acid is dropped in until the change in color (after thorough stirring) shows that neutralization has occurred. The volume of acid added is read accurately. Knowing the concentration of the base solution and the volume of the acid solution, we can calculate the exact weight of the acid needed for the neutralization of the base.

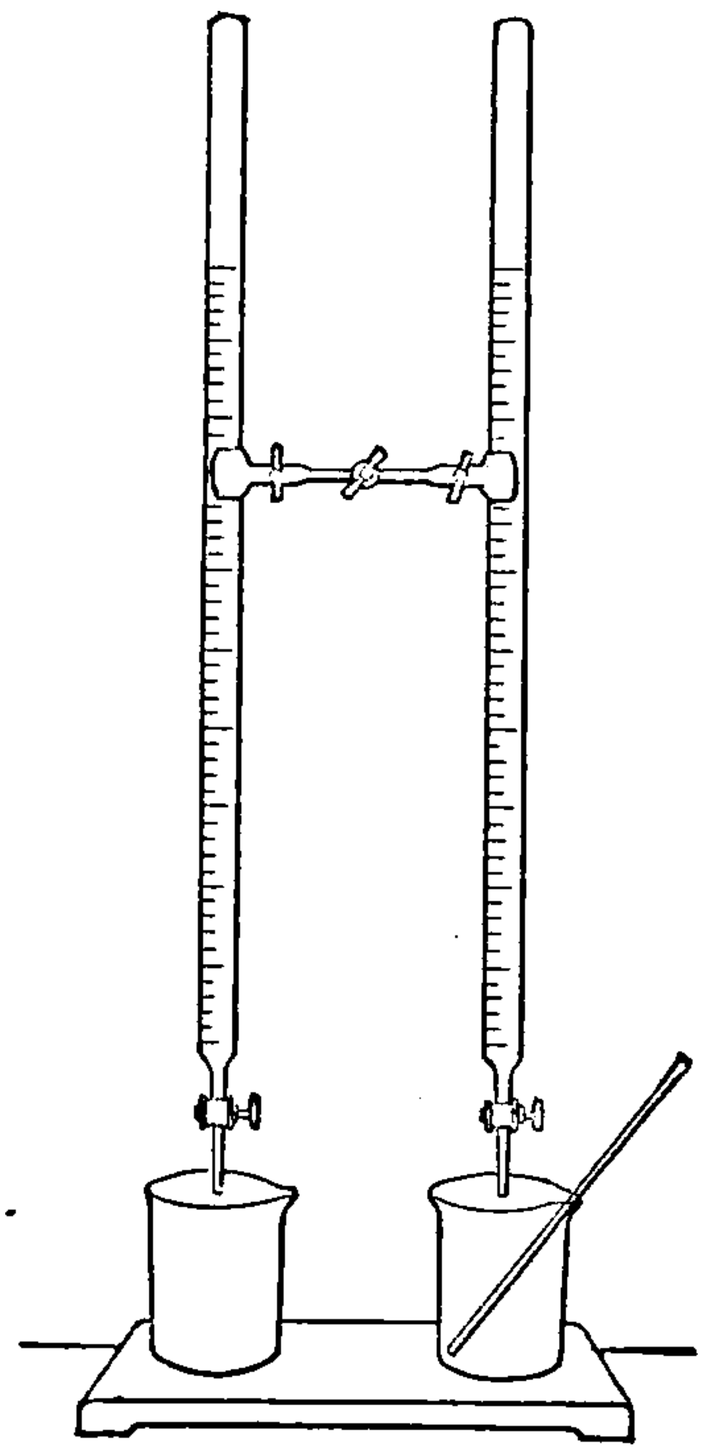

FIG. 33. — Burettes.

Heat is liberated when these ions unite to form water. If neutralization is the combining of hydrogen ions with hydroxyl ions, the same amount of heat should be liberated when a given weight of water is formed. Experiment shows that the **heat of neutralization**, as it is called, is the same in all cases of neutralization, provided the solutions are dilute and other thermal changes do not occur. It is expressed in terms of a unit called the small calorie, i.e. the quantity of heat necessary to raise 1 gm. of water 1° C. in temperature. And when 18 gm. of water are formed by the act of neutralization, 13,700 calories are liberated. A general equation for a typical case of neutralization might be written —

$$\underset{\text{Hydroxyl Ion}}{OH^-} + \underset{\text{Hydrogen Ion}}{H^+} = \underset{\text{Water}}{H_2O} + 13{,}700 \text{ calories}$$

**165. Properties of Salts.** — Salts, as previously defined, are the compounds formed by substituting a metal for the hydrogen of an acid, e.g. hydrochloric acid (HCl) gives chlorides (NaCl, etc.) and nitric acid gives nitrates ($NaNO_3$, etc.) (**94**). Some acids contain more than one

replaceable hydrogen atom in a molecule, and can form more than one class of salts. For example, monobasic acids (e.g. $HCl$, $HNO_3$) contain one replaceable hydrogen atom, dibasic acids (e.g. $H_2SO_4$, $H_2CO_3$) two, and tribasic acids (e.g. $H_3PO_4$) three. Ordinarily monobasic acids form only one class of salts, dibasic acids form two classes, and tribasic acids three. Again, we might regard salts as formed from bases by the substitution of a non-metallic element or group for the hydroxyl of the base; e.g. sodium hydroxide ($NaOH$) gives chlorides or nitrates by substituting $Cl$ or $NO_3$ for $OH$. Just as a molecule of some acids contains more than one hydrogen atom, so a molecule of some bases contains more than one hydroxyl group; such bases can form more than one class of salts. Bases are classified as monacid, diacid, and triacid bases, etc., according to the number of the replaceable hydroxyl groups present in a molecule. Thus, sodium hydroxide ($NaOH$) is monacid, calcium hydroxide ($Ca(OH)_2$) diacid, and aluminium hydroxide ($Al(OH)_3$) triacid. Salts may be regarded as formed from acids or from bases by substitution. Based on the methods of formation just described, there are three classes of salts — normal, acid, and basic. **Normal salts** are those formed by substituting (1) a metal for all the hydrogen of an acid or (2) a non-metal or non-metallic group for all the hydroxyl groups of a base. **Acid salts** result when part of the hydrogen of an acid is replaced by a metal. **Basic salts** are produced by replacing some of the hydroxyl groups of a base by a non-metal or non-metallic group. The varying power of replaceability is called the **basicity of an acid** and the **acidity of a base.** The relations of acids, bases, and salts may be represented thus: —

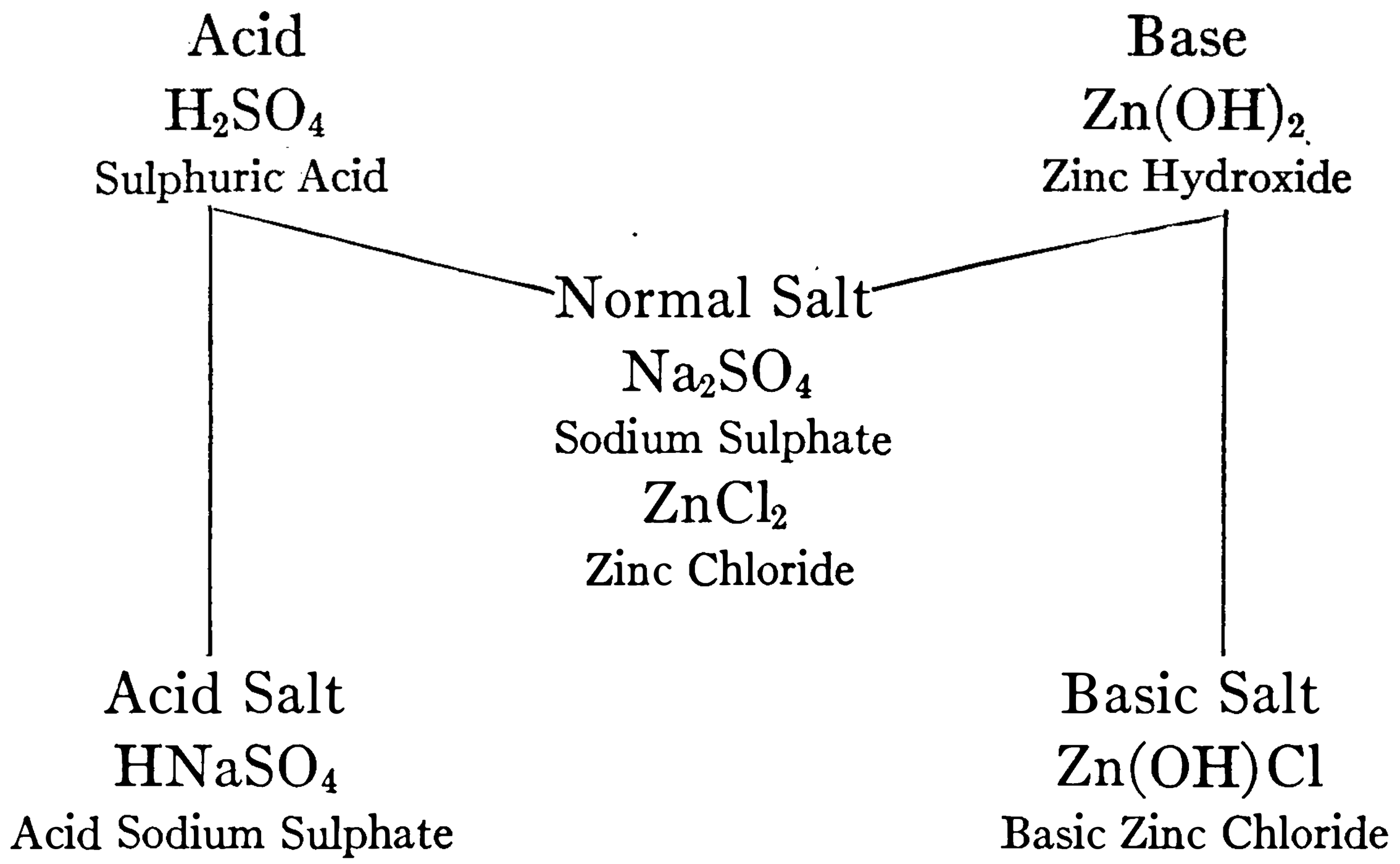


The terms *normal*, *acid*, and *basic* as applied to salts indicate their composition, not their general properties. For when solutions of salts are tasted or tested with litmus, the results vary. Normal salts may be neutral, acid, or basic toward litmus; acid salts may be acid or nearly neutral; most basic salts are almost insoluble in water and the solutions react only faintly with litmus. The theory of electrolytic dissociation offers an acceptable explanation of these facts. According to the theory, solutions of salts, of course, contain ions. We should expect solutions of acid salts to contain hydrogen ions, of basic salts to contain hydroxyl ions, and of normal salts to contain neither. Many solutions of salts — acid and basic as well as neutral — behave toward litmus as we should expect. Thus, acid sodium sulphate ($HNaSO_4$) is acid, basic bismuth nitrate ($Bi(OH)_2NO_3$) is basic, and sodium chloride ($NaCl$) is neutral. But certain salts behave abnormally toward litmus. Thus, a solution of the normal salt copper sulphate ($CuSO_4$) is acid, of normal sodium carbonate is basic, and of acid sodium carbonate is neutral. Why? Hitherto pure water has been called a

THIS PAGE IS LOCKED TO FREE MEMBERS
Purchase full membership to immediately unlock this page

HISTORY

Tens of thousands of important historical sources, many previously unobtainable, are now available for the first time with a Forgotten Books Full Membership.

Unlimited Access
$8.99/month

Continue

*Fair usage policy applies

The corresponding equations for the hydrolysis of copper sulphate are —

$$\underset{\text{Copper Sulphate}}{CuSO_4} + \underset{\text{Water}}{2H_2O} = \underset{\text{Copper Hydroxide}}{Cu(OH)_2} + \underset{\text{Sulphuric Acid}}{H_2SO_4}$$

$$Cu^{++} + SO_4^{--} + 2H^+ + 2OH^- \rightarrow Cu(OH)_2 + SO_4^{--} + 2H^+$$

(See Part II, Exp. **69**.)

**166. Electrolysis.** — Electrolysis is the series of changes accompanying the passage of an electric current through a solution of an electrolyte, i.e. an acid, base, or salt. The apparatus in which the operation is conducted is called an electrolytic cell (Fig. 34 — see also Figs. 22 and 32). The electrolytic cell generates no electric current; it receives the current from a dynamo or a battery.

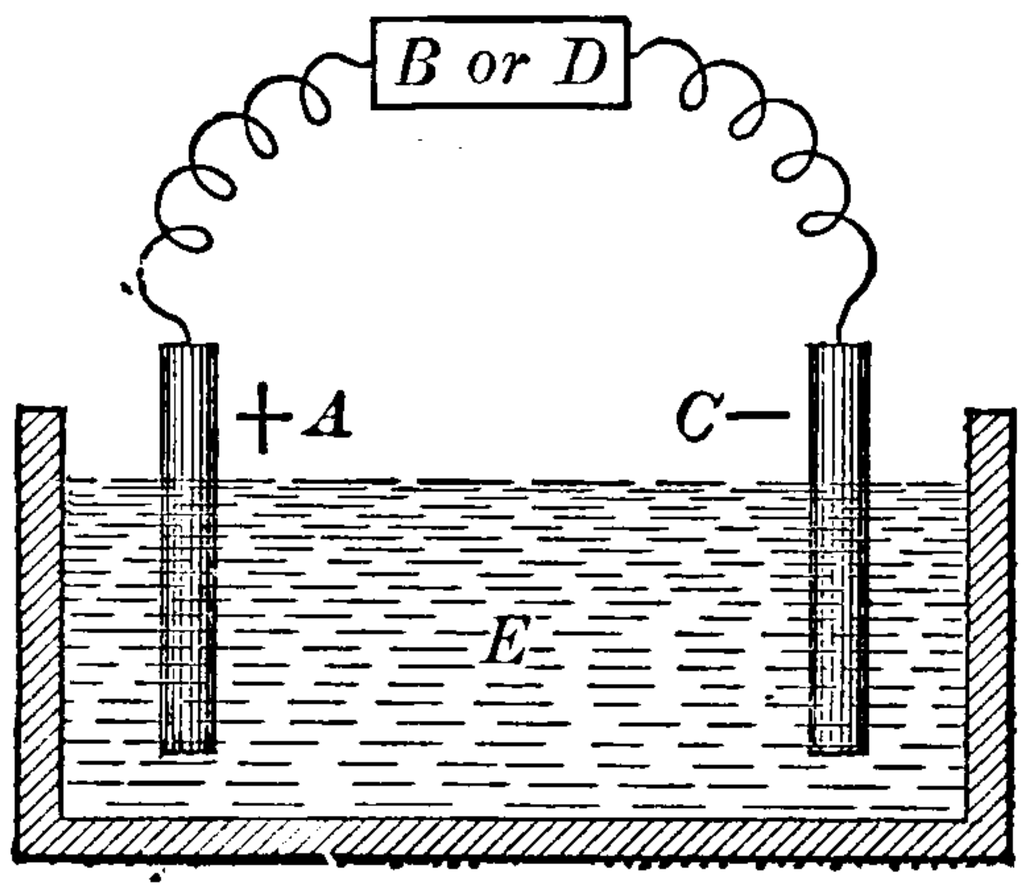


Fig. 34. — Electrolytic Cell. A and C are the Electrodes, E is the Solution of the Electrolyte, B or D is the Battery or Dynamo.

Two illustrations of electrolysis have already been given — (1) a dilute sulphuric acid solution (**54**), which yields hydrogen at the cathode and oxygen at the anode, and (2) sodium chloride solution (**75**), which yields sodium hydroxide and hydrogen at the cathode and chlorine at the anode.

Let us interpret typical illustrations of electrolysis by the theory of electrolytic dissociation. (*a*) Hydrochloric acid contains hydrogen ions ($H^+$) and chloride ions ($Cl^-$). These ions are formed in the solution as soon as the acid dissolves and before the electric current is connected with the cell. When the current is turned on, the electrodes become charged with electricity — the anode positively and the cathode negatively. Now according to a principle

established many years ago, bodies charged with like kinds of electricity repel each other and bodies charged with unlike kinds attract each other. Consequently the anions or electro-negative ions move toward the anode or electro-positive electrode, while the cations or electro-positive ions move toward the cathode or electro-negative electrode, or briefly, "anions to anode, cations to cathode." This migration of the ions, as it is called, toward their respective electrodes is shown diagrammatically in Fig. 35. As soon as the ions reach their electrodes they act in accordance with another long-established principle; that is, they give up their electric charges. In other words, when the electro-positive cations of hydrogen touch the electro-negative cathode, the electric charges of the ions are neutralized.

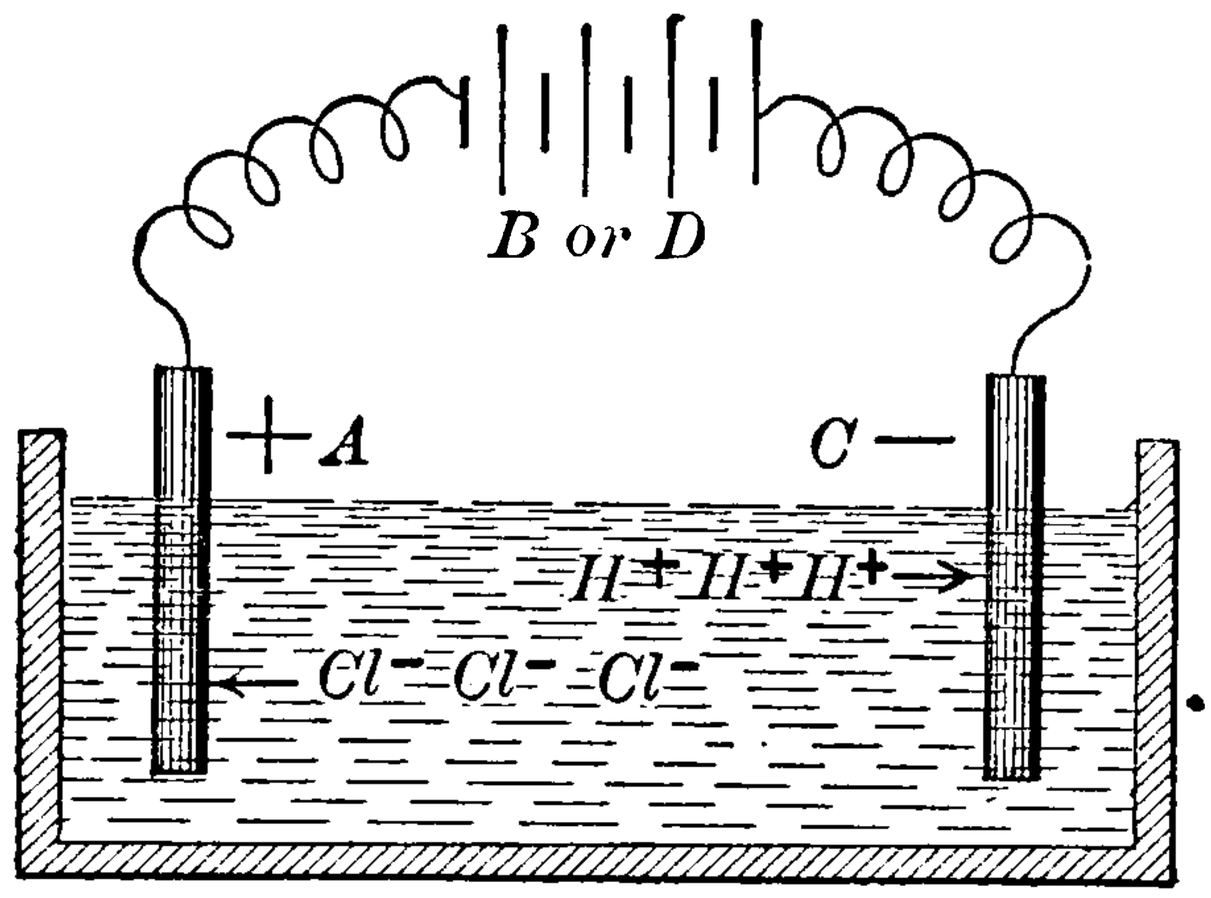


Fig. 35. — Migration of Ions in an Electrolytic Cell.

Electric charges lost by the cathode are constantly renewed by the battery or dynamo; but the hydrogen ions once deprived of their electric charges do not regain them and immediately become ordinary, uncharged hydrogen atoms, which combine and escape as molecules of hydrogen gas. Similarly, the electro-negative anions of chlorine migrate to the electro-positive anode, lose their charges, become chlorine atoms, and escape as chlorine gas. (*b*) In a copper sulphate solution the ions are copper ions ($Cu^{++}$) and sulphate ions ($SO_4^{--}$). When this solution is electrolyzed, the copper ions ($Cu^{++}$) migrate to the cathode, lose their electric charges, become copper atoms (Cu), and adhere as metallic copper to the cathode. The sulphate ions ($SO_4^{--}$) lose their electric

charges at the anode and immediately interact with the water around the anode, forming sulphuric acid ($H_2SO_4$) and oxygen (O). The oxygen escapes, but the sulphuric acid mingles with the solution and dissociates into its ions. (*c*) Similarly, in a solution of sodium sulphate the $SO_4$-ions undergo the change described in (*b*), while the sodium atoms interact with the water around the cathode and form sodium hydroxide and hydrogen. (See Part II, Exps. **70**, **71**, **74**.)

The so-called electrolysis of water is interpreted as follows: Water itself does not conduct electricity to an extent which is comparable with the behavior of an electrolytic solution, because water dissociates only inappreciably and gives therefore an exceedingly small number of ions. A solution of sulphuric acid contains hydrogen ions ($2H^+$) and sulphate ions ($SO_4^{--}$). When a current is passed through this solution, hydrogen ions migrate to the cathode, lose their electric charges, become hydrogen atoms, and eventually escape as hydrogen gas; the $SO_4$-ions migrate to the anode, lose their electric charges, and interact with the water to form sulphuric acid and oxygen. The oxygen escapes as a gas, while the sulphuric acid dissociates into its ions.

We may now re-define or describe **electrolysis** as the migration of ions induced by an electric current, the ions moving to their respective electrodes, where they are transformed into atoms or atomic groups, which escape wholly or in part as elements or form various products by interaction with the water of the solution.

**167. Practical Applications of Electrolysis.** — Electrotyping and electroplating consist in depositing a thin film of metal upon a surface. The process of **electrotyping** is substantially as follows: The page of type, for example, is first reproduced in wax. This exact impression is next covered with powdered graphite to make it conduct electricity. The coated mold is then suspended as the cathode in an acid solution of copper sulphate; the anode is a plate or bar of copper. When the current is passed, electrolysis

THIS PAGE IS LOCKED TO FREE MEMBERS
Purchase full membership to immediately unlock this page

Get Smart

Over 2,000 years of human knowledge in 797,885 volumes

Instant access $8.99/month

Continue

*Fair usage policy applies

(2) The simple ions formed by different electrolytes are, as a rule, the charged atoms or groups corresponding to the two parts of the compounds. Thus, we speak of nitric acid as consisting of the two parts H and $NO_3$; similarly, the parts of sodium nitrate are Na and $NO_3$, and of sodium hydroxide are Na and OH. The corresponding ions are $H^+$, $NO_3^-$, $Na^+$, $NO_3^-$, $Na^+$, $OH^-$. The ions normally formed by the ionization of acids, bases, and salts may be seen in the Table of Ions. (See Part II, Exps. **76**, **77**.)

TABLE OF IONS

| Element or Group | Ion | Element or Group | Ion | Element or Group | Ion |
|---|---|---|---|---|---|
| Hydrogen ..... | $H^+$ | Calcium .... | $Ca^{++}$ | Aluminium. | $Al^{++}$ |
| Sodium ..... | $Na^+$ | Barium..... | $Ba^{++}$ | Antimony.. | $Sb^{+++}$ |
| Potassium ..... | $K^+$ | Copper ..... | $Cu^{++}$ | Bismuth ... | $Bi^{+++}$ |
| Silver ..... | $Ag^+$ | Zinc..... | $Zn^{++}$ | Iron (ic) ... | $Fe^{+++}$ |
| Ammonium.... | $NH_4^+$ | Magnesium . | $Mg^{++}$ | Tin (ic).... | $Sn^{++++}$ |
| Mercury (ous) . | $Hg^+$ | Lead ..... | $Pb^{++}$ | | |
| Chlorine..... | $Cl^-$ | Iron (ous)... | $Fe^{++}$ | | |
| Bromine..... | $Br^-$ | Mercury (ic). | $Hg^{++}$ | | |
| Iodine ..... | $I^-$ | Tin (ous) ... | $Sn^{++}$ | | |
| Nitrate..... | $NO_3^-$ | Sulphate.... | $SO_4^{--}$ | | |
| Chlorate ..... | $ClO_3^-$ | Sulphide .... | $S^{--}$ | | |
| Hydroxyl..... | $OH^-$ | Carbonate .. | $CO_3^{--}$ | | |
| | | Chromate... | $CrO_4^{--}$ | | |
| | | Dichromate . | $Cr_2O_7^{--}$ | | |

**169. Conclusion.** — The topics discussed in the pages immediately preceding show that the theory of electrolytic dissociation is an acceptable explanation of many properties of dilute solutions, more particularly the solutions of acids, bases, and salts.

## EXERCISES

**1.** State some general properties of solutions of acids, bases, and salts which differ from the corresponding properties of solutions of other kinds of substances.

**2.** State the theory of electrolytic dissociation. Illustrate it.

**3.** Define and illustrate the terms *ion, anion, cation, electrode, anode, cathode, positive electrode, negative electrode.*

**4.** Distinguish between an atom and an ion of potassium. How is each represented?

**5.** Name the ions in a solution of (*a*) hydrochloric acid, (*b*) sodium chlorate, (*c*) calcium hydroxide, (*d*) sodium nitrate, (*e*) zinc sulphate.

**6.** In what respect are acids alike? Different? Answer for bases.

**7.** Interpret neutralization by the theory of electrolytic dissociation.

**8.** Discuss salts in terms of the theory of electrolytic dissociation.

**9.** Define electrolysis. Interpret two or more cases of electrolysis by the theory of electrolytic dissociation.

**10.** Write ionic equations for (*a*) potassium chloride and silver sulphate form silver chloride and potassium sulphate, and (*b*) barium nitrate and sodium sulphate form barium sulphate and sodium nitrate.

**11.** Write the name and formula of the salt formed by the interaction of calcium hydroxide and (*a*) nitrous acid, (*b*) sulphurous acid, and (*c*) chloric acid.

**12.** Write the name and formula of the sodium salt corresponding to these acids: Carbonic, chromic, persulphuric, manganic, hypophosphorous, and manganous. Write the name and formula of the corresponding salts of ammonium, mercury (ic), lead, magnesium, aluminium, silver, and iron (ous).

## PROBLEMS

**1.** Calculate the number of grams of hydrogen in 40 gm. of (*a*) sulphuric acid, (*b*) nitric acid, (*c*) hydrochloric acid.

**2.** Calculate the number of grams of hydroxyl corresponding to (*a*) 75 gm. of the base formed by Na, (*b*) 35 gm. of $Al(OH)_3$, (*c*) 80 gm. of $Ba(OH)_2$.

**3.** Calculate the weight of nitric acid needed to neutralize 27 gm. of the base corresponding to these metals: sodium, K, calcium, Ba, $NH_4$.

**4.** Suppose 37.5 cc. of a hydrochloric acid solution neutralize 30 cc. of a sodium hydroxide solution, and that each cc. of the sodium hydroxide solution contains .003 gm. of the base. What weight of hydrochloric acid is contained in the acid solution?

**5.** Two solutions are thoroughly mixed. One contains 75 gm. of sulphuric acid, and the other 75 gm. of sodium hydroxide. What will be the weight of the compounds (other than water) in the final solution?

# CHAPTER XV

## CARBON — OXIDES AND CARBONATES — HYDROCARBONS — CARBIDES — CYANOGEN

**170. Occurrence of Carbon.** — Uncombined carbon occurs as diamond and graphite, and in a more or less impure state as coal and similar substances, which are included in the term *amorphous carbon.* Carbon forms a very large number of compounds, natural and manufactured. Its compounds with hydrogen and oxygen, and with nitrogen also, are essential parts of plants and animals. Meat, starch, fat, sugar, wood, cotton, paper, soap, wool, wax, flour, albumin, rubber, and bone are examples of natural substances which contain carbon. It is a constituent of carbon dioxide and of carbonates, such as limestone, chalk, marble, and dolomite. Illuminating gases, gasoline, and kerosene (and other substances obtained from petroleum), and turpentine are compounds of carbon. Among the manufactured compounds of carbon are dyestuffs, many medicines and perfumes, soap, and alcohol. (See Part II, Exp. **80**.)

**171. Diamond** is pure crystalline carbon. As found in nature, diamonds are rough-looking stones; a few are crystals, some are rounded like peas, and many are irregular; all must be ground into special shapes and polished to bring out the luster and make them sparkle (Fig. 36). The most expensive diamonds are colorless, transparent, and flawless. Many attractive stones, however, are slightly tinted, often yellow, rarely pink or blue.

THIS PAGE IS LOCKED TO FREE MEMBERS
Purchase full membership to immediately unlock this page

HISTORY

Tens of thousands of important historical sources, many previously unobtainable, are now available for the first time with a Forgotten Books Full Membership.

Unlimited Access
$8.99/month

Continue

*Fair usage policy applies

bago, because it was formerly supposed to contain lead. Unlike diamond, graphite is a good conductor of electricity and is often used to coat molds in electrotyping. It is so soft that it readily wears away; hence, it blackens the fingers and leaves a black mark on paper when drawn across it. This property is indicated by the name graphite, which is derived from a Greek word meaning to write. It resembles diamond in its insolubility in liquids at the ordinary temperature. Its specific gravity is 2.2, being considerably lighter than diamond. It changes into carbon dioxide when heated intensely in oxygen; but it can be heated to a very high temperature in the air without melting or undergoing appreciable change. It is used to make stove polish and protective paints, as a lubricant where oil might be decomposed by heat or might clog machinery, as the principal ingredient of graphite crucibles in which metals are often melted, and in making electrodes for electric furnaces and electrolytic cells. (See Part II, Exp. **88**.)

Large quantities of graphite are consumed in the manufacture of **lead pencils.** The graphite is washed free from impurities, ground to a fine powder, mixed with more or less clay, and then pressed through perforated plates, from which the "lead" issues in tiny rods. These are dried, cut into the proper lengths, baked to remove all traces of moisture, and then inserted in the wooden case. Soft pencils contain a larger proportion of graphite than hard ones.

Graphite occurs abundantly, the famous localities being Ceylon, Siberia, and Mexico. Considerable graphite is manufactured at Niagara Falls by heating a special grade of coal or of coke out of contact with air in an electric furnace. The process is electrothermal, i.e. the chemical change is brought about by the heat produced by passing an electric current through the materials (compare **200**). Articles of almost any size can now be made of graphite, which is so compact that it can be further shaped by

tools. This kind of graphite is especially suitable for the electrodes used in electrolytic and electrothermal apparatus.

**173. Amorphous Carbon** includes all varieties of coal and charcoal, lampblack, coke, and gas carbon. They are the non-crystalline forms of impure carbon. The word amorphous means literally "without form," and it is often used to designate soft, powdery, and uncrystallized substances.

**174. Coal.** — There are two principal kinds of coal, though several varieties of each are common articles of commerce. (1) **Bituminous** or soft coal contains about 70 per cent of carbon. It burns with a smoky flame, and is used to make illuminating gas, coke, and as a fuel for steam. (2) **Anthracite** or hard coal contains 90 per cent or more of carbon. It ignites with difficulty, burns with little or no flame, and produces considerable heat. It is used mainly for domestic purposes, — heating and cooking, — especially in the eastern United States. Some varieties of coal, such as **lignite** or brown coal, contain only a small proportion of carbon, as low as 20 per cent. Yet they are used as fuel in some localities.

Besides carbon, coal contains moisture, ash or mineral matter, and volatile matter which consists mainly of compounds of hydrogen and carbon. Coal is used as fuel because when the carbon and gases are burned, heat is readily liberated. The heat producing value of coal is measured in calories per gram, i.e. the number of calories liberated when 1 gram is burned freely (compare **164**). Thus, a well known commercial variety of anthracite coal liberates about 7724 calories and of bituminous coal 8768 calories. Coal is often purchased on the basis of its calorific value (**182**). (See Part II, Exp. **81**.)

Ages ago the vegetation was exceedingly dense and luxuriant upon land slightly raised above the sea. In process of time this vegetation decayed, accumulated, and slowly became covered with sand, mud, and water. This vegetable matter was then slowly

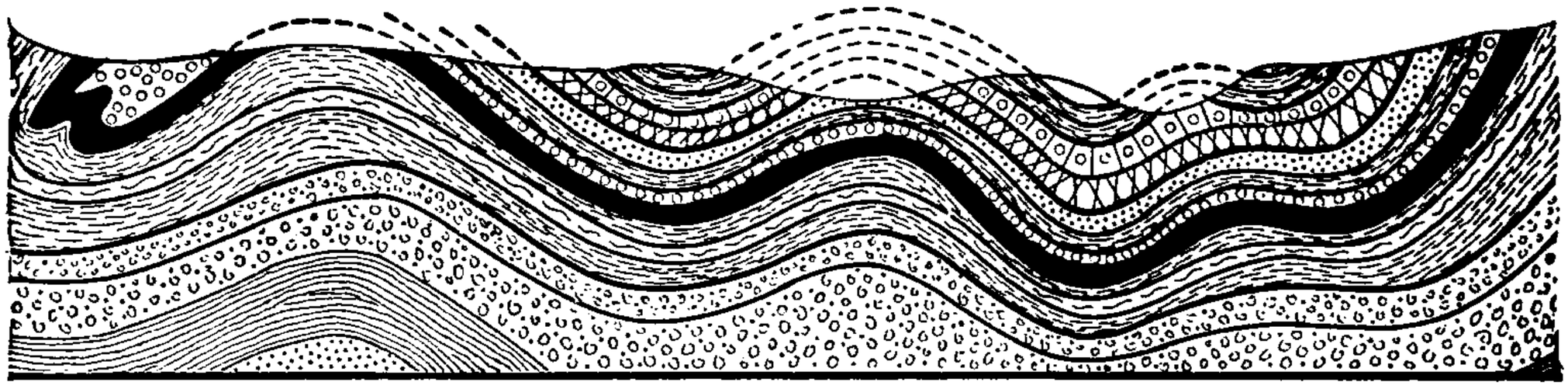

Fig. 37. — Section of Part of the Earth's Crust near Mauch Chunk, Penn., Showing Layers of Coal.

changed into more or less impure solid carbon, moisture, and gaseous and liquid compounds called hydrocarbons. The geological and chemical changes were repeated, and as a result we find in the earth layers or seams of carbonaceous matter varying in thickness and composition (Fig. 37). These are the coal beds. Coal beds contain proofs of their vegetable origin, viz. impressions

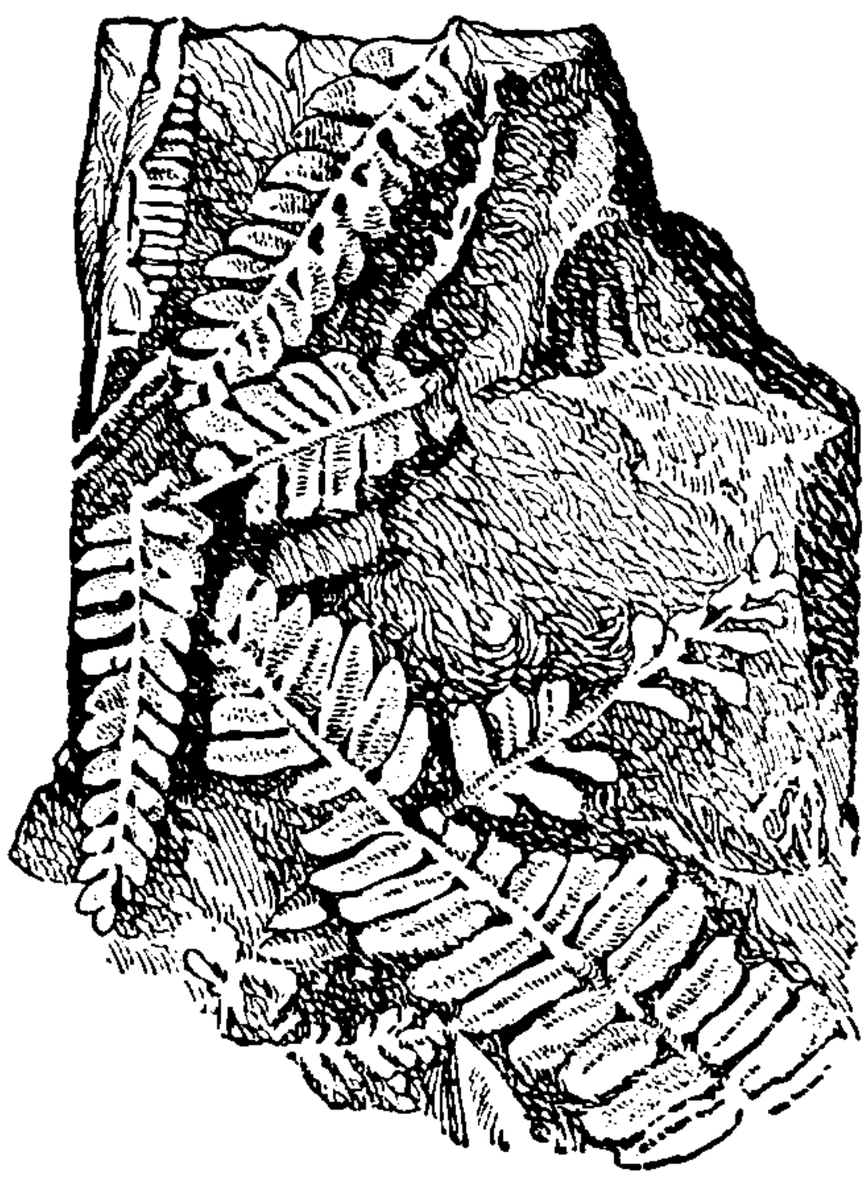

Fig. 38. — Fossil Found in a Coal Bed.

Fig. 39. — Section of Coal as Seen through a Microscope.

of vines, stems, and leaves of plants, and similar vegetable substances (Fig. 38). A thin section of coal examined through a microscope reveals a distinct vegetable structure (Fig. 39).

**175. Charcoal** is obtained by heating wood, bones, and other organic matter in closed vessels, or by partially

THIS PAGE IS LOCKED TO FREE MEMBERS
Purchase full membership to immediately unlock this page

Get Smart

Over 2,000 years of human knowledge in 797,885 volumes

Instant access $8.99/month

Continue

*Fair usage policy applies

shown in Fig. 40, and covered with turf. The wood is lighted, and as it slowly burns care is taken to regulate the supply of air so that the wood will smolder but not be entirely consumed. The volatile matter escapes and charcoal remains. Much charcoal is made by heating wood in closed furnaces, no air whatever being admitted. By this method, which is called dry or **destructive distillation** because the wood is destroyed, the yield of charcoal is about 30 per cent and all the volatile matter is saved. More or less charcoal is obtained by heating any compound of carbon, e.g. sugar or starch, the charring being a **test for carbon.**

**177. Animal Charcoal or Bone Black** is made by heating bones and animal refuse in a closed vessel. The animal charcoal from bones contains only about 10 per cent of carbon, but this carbon is distributed throughout the porus mineral matter of the bone, which is largely calcium phosphate. Under the name of ivory black, animal charcoal is used as a pigment, especially in making shoe-blacking. It is extensively used to remove the color from sugar sirups, oils, and other liquids colored by organic matter.

**178. Coke** is made by expelling the volatile matter from bituminous coal, somewhat as charcoal is made from wood. It is left in the retorts when coal is distilled in the manufacture of coal gas (**205**). On a large scale it is made by heating a special grade of soft coal in huge brick ovens, shaped like a beehive, from which air is excluded after combustion begins. Sometimes the coke is made in closed furnaces constructed so as to save the by-products, — ammonia, tar, organic compounds, and combustible gases. Coke is a grayish, porous solid, harder and heavier than charcoal. It burns with no smoke and a feeble flame.

**179. Gas Carbon** is a variety of amorphous carbon which is deposited on the inside of the retorts used in the manufacture of

illuminating gas (**205**). It is a black, heavy, hard solid, and is almost pure carbon. It is a good conductor of electricity, and is extensively used for the manufacture of the carbon rods of electric lights and for plates of electric batteries.

**180. Lampblack** is prepared by burning oil or oily substances rich in carbon in a limited supply of air. The dense smoke, which is mainly finely divided carbon, is passed through a series of condensing chambers, where it is collected upon coarse cloth or a cold surface. Lampblack is one of the purest forms of amorphous carbon, and it is used in making printer's ink and certain black paints.

**181. Allotropism.**—Diamond, graphite, and pure amorphous carbon, though having essentially different properties, are different modifications of the element carbon. They can be changed into one another. Each burns in oxygen and the product is carbon dioxide. Furthermore, the same weight of each forms the same weight of carbon dioxide. Elements which exist in two or more distinct modifications are called allotropic, and the property of assuming more than one elementary modification is called **allotropism** or **allotropy** (from Greek words meaning another form).

**182. Chemical Properties of Carbon.** — Carbon does not interact with acids or bases, but it is readily oxidized by salts which liberate oxygen, such as potassium nitrate and potassium chlorate. It unites directly with certain elements, though the temperature must usually be raised to bring about combination. Thus, with oxygen it forms carbon dioxide and carbon monoxide, and with sulphur, carbon disulphide. Carbon unites with many metals and some non-metals at the high temperatures produced in the electric furnace, thereby forming carbides (**199–201**). Considerable heat is developed during the uniting of carbon with oxygen; the use of various forms of carbon and carbonaceous substances as fuel is based on this fact. The thermal equation for the transformation of carbon (in the form of charcoal) into carbon dioxide is:—

$$\underset{\text{Carbon}}{C} + \underset{\text{Oxygen}}{O_2} = \underset{\text{Carbon Dioxide}}{CO_2} + 97{,}000 \text{ calories}$$

Carbon reduces oxides, a simple illustration being the reduction of copper oxide, thus: —

$$\underset{\text{Copper Oxide}}{2CuO} + \underset{\text{Carbon}}{C} = \underset{\text{Carbon Dioxide}}{CO_2} + \underset{\text{Copper}}{2Cu}$$

Different varieties of carbon are used as reducing agents, especially coke in the manufacture of iron from ferric oxide ($Fe_2O_3$).

## Oxides of Carbon, Carbonic Acid, Carbonates

**183. Occurrence and Formation of Carbon Dioxide.** — The occurrence of carbon dioxide in the atmosphere and in many natural waters has already been mentioned (**128, 43**). Carbon dioxide is one product of ordinary combustion, respiration of animals; fermentation, and decay. (See Part II, Exp. **89**.)

Ordinary combustion is a chemical combining of carbon and oxygen. The equation for this change is: —

$$\underset{\text{Carbon}}{C} + \underset{\text{Oxygen}}{O_2} = \underset{\text{Carbon Dioxide}}{CO_2}$$

Carbon dioxide is formed by the free combustion of such common substances as wood, coal, charcoal, coke, oils, waxes, cotton, bone, starch, sugar, meat, bread, alcohol, camphor, and illuminating gas. This fact may be shown by bubbling the smoke from these burning substances through calcium hydroxide solution (**128**).

The continuous oxidation of the tissues of the body produces carbon dioxide (**186**). And if we exhale the breath through a glass tube into calcium hydroxide solution, the carbon dioxide which is in the breath turns the solution milky — the usual **test for carbon dioxide.** The equation for the change is: —

$$\underset{\text{Carbon Dioxide}}{CO_2} + \underset{\text{Calcium Hydroxide}}{Ca(OH)_2} = \underset{\text{Calcium Carbonate}}{CaCO_3} + H_2O$$

THIS PAGE IS LOCKED TO FREE MEMBERS
Purchase full membership to immediately unlock this page

HISTORY

Tens of thousands of important historical sources, many previously unobtainable, are now available for the first time with a Forgotten Books Full Membership.

Unlimited Access
$8.99/month

Continue

*Fair usage policy applies

gas often escaping rapidly in bubbles. This gas can be readily liquefied.

Carbon dioxide does not burn, but extinguishes burning substances. Instead of the gas itself, a saturated solution is frequently used. The solution is prepared, as needed, in portable fire extinguishers and chemical engines by the interaction of sulphuric acid and sodium bicarbonate ($HNaCO_3$). The ordinary fire extinguisher contains a solution of sodium bicarbonate and a loosely stoppered bottle of sulphuric acid; upon inverting the tank, the stopper of the acid bottle falls out, the two liquids mix, and the pressure of the generated gas forces the saturated solution of carbon dioxide out of the nozzle of the extinguisher (Fig. 42).

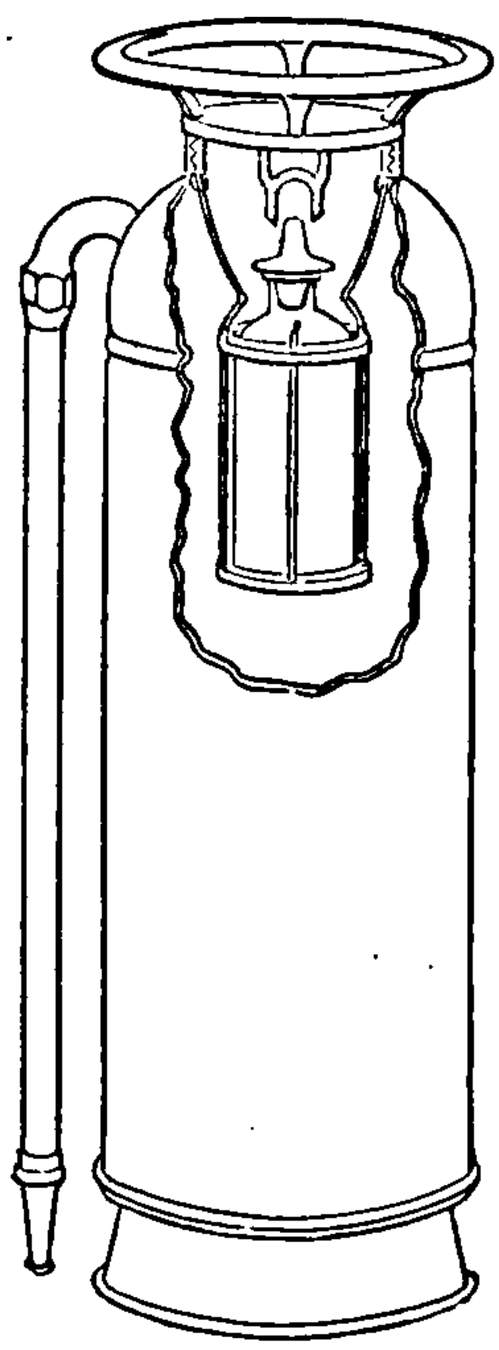

Fig. 42. — Portable Fire Extinguisher (Partly Open) Showing Stoppered Acid Bottle in Original Position.

**186. Relation of Carbon Dioxide to Life.** — Carbon dioxide is not poisonous, though the presence of a small quantity in the air is objectionable. As already stated the carbon dioxide that is exhaled from our lungs is one of the products formed by the oxidation of the tissues of the body, new tissue itself being formed from the food (**18, 128,** see also Food and Nutrition, Chapter XVII). The carbon needed for the rebuilding of tissue is supplied by starch and other substances. Carbon dioxide is a waste product of animal life. On the other hand, carbon dioxide is an essential food of plants. Through their leaves and other green parts they absorb carbon dioxide from the atmosphere, decompose it, reject part of the oxygen, and store up the carbon in the form of complex com-

pounds, such as starch ($(C_6H_{10}O_5)_x$). The sunlight and the green coloring matter (called chlorophyl) aid the plant in the formation of these compounds. The relation of carbon dioxide to plants and animals is impressive. Plants absorb carbon dioxide and transform it into starch, while animals eat starch as food, assimilate it, and oxidize the carbon to carbon dioxide, which is exhaled into the atmosphere ready for the plants again, and so on.

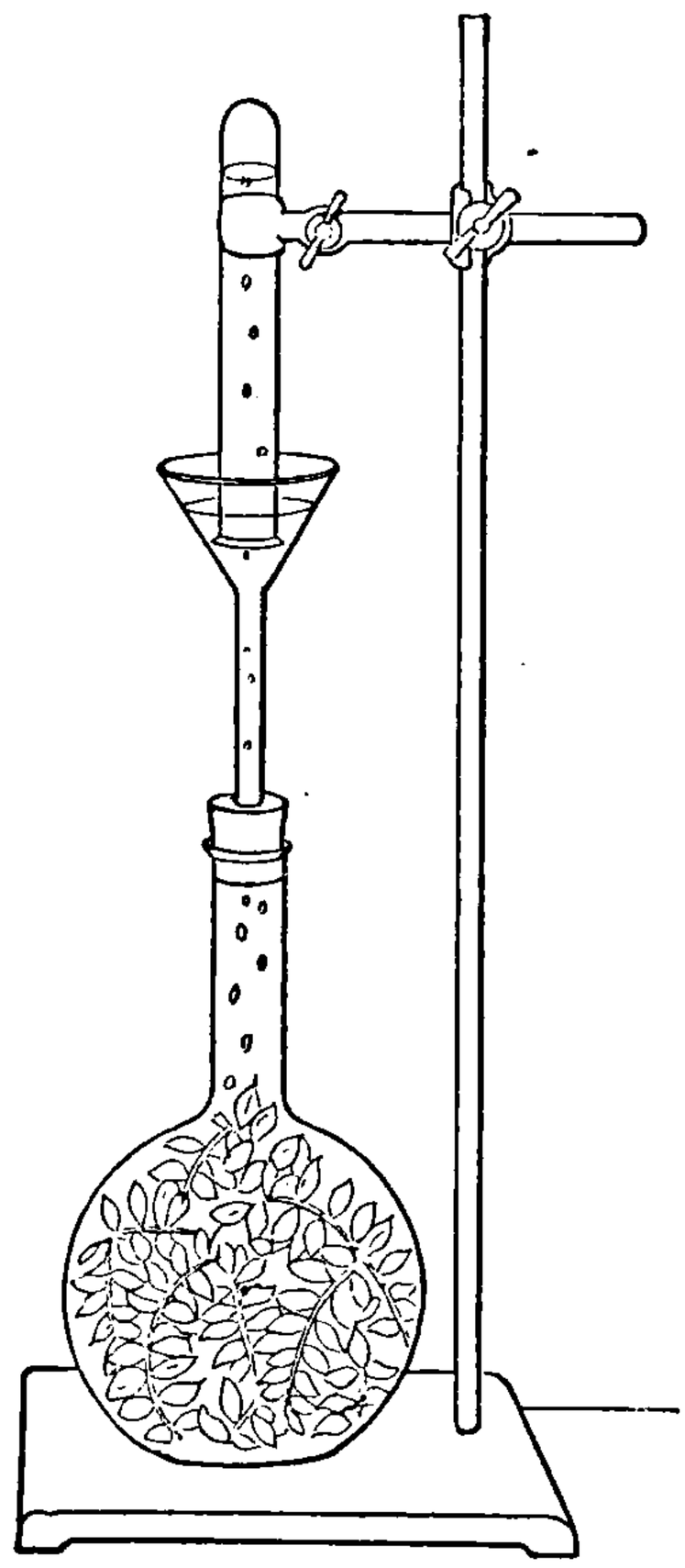

Fig. 43. — Experiment Showing the Liberation of Oxygen by Plants.

The fact that plants take up carbon dioxide and reject oxygen can be readily illustrated, as shown in Fig. 43. Fresh green leaves are put into the large vessel, which is then completely filled with water saturated with carbon dioxide. The stopper with its funnel is pushed in to exclude the air, the funnel is partly filled with the same liquid, and the test tube is filled and arranged as shown in the figure. On exposure to the sunlight for several hours, a gas collects in the test tube. The usual test shows that the gas is oxygen. If necessary, a second experiment may be done to show that no oxygen is produced when the vessel contains water freed from carbon dioxide and other gases.

The significant relation of carbon dioxide and oxygen to plants and animals, which is often spoken of as the cycle of carbon and oxygen, is shown diagramatically in Fig. 44.

**187. Carbonic Acid.** — Carbon dioxide gas is often called carbonic acid gas, or simply carbonic acid; the latter term is incorrect when applied to carbon dioxide and should be used only as the name of the compound $H_2CO_3$. If carbon dioxide is passed into water, it

combines to some extent with the water and forms an acid, which is **carbonic acid** ($H_2CO_3$). Carbon dioxide is sometimes called **carbonic anhydride** to emphasize the fact that, like oxides of other non-metals, it unites directly with water and thereby forms an acid. A solution of carbonic acid is very weak, i.e. it ionizes only

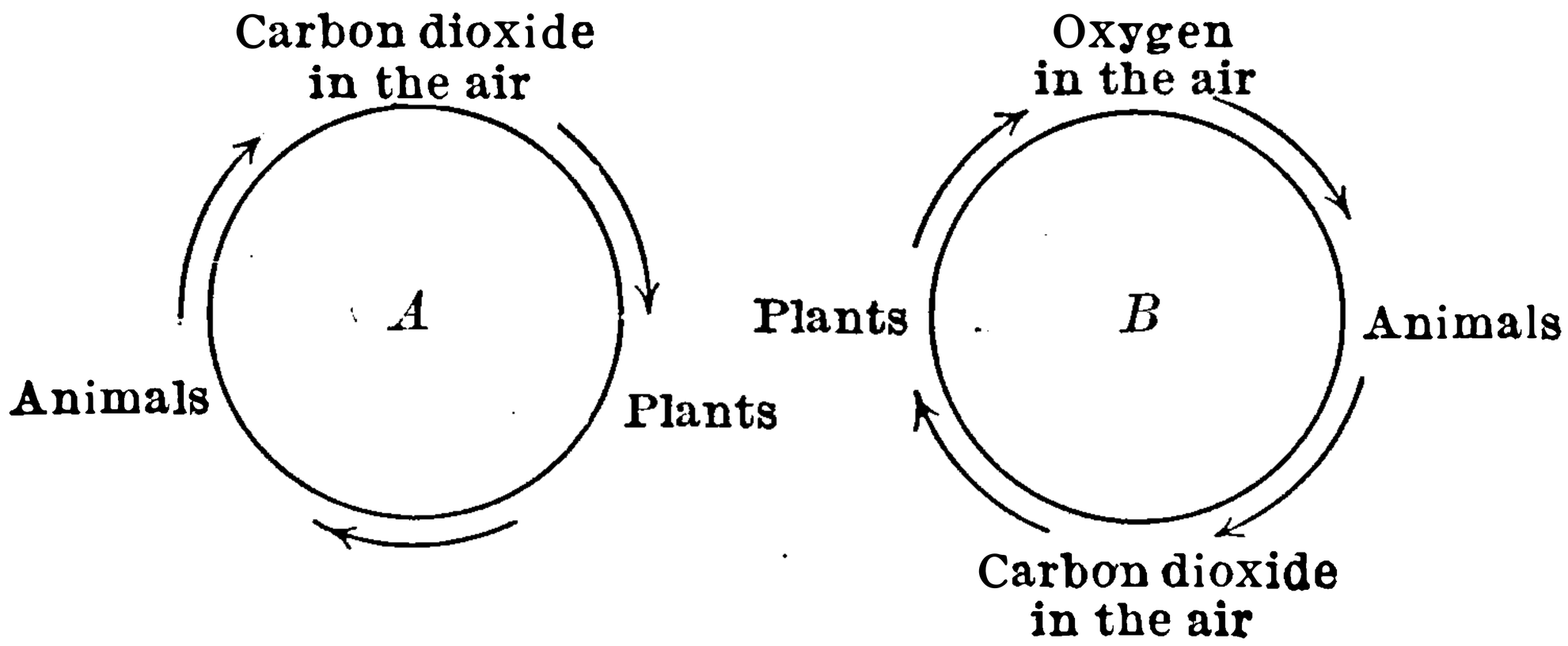


Fig. 44. — Cycle of Carbon (A) and Oxygen (B).

slightly, its ions being $H^+$ and $HCO_3^-$ (168). Carbonic acid has never been obtained free, and is so unstable that it easily breaks up by gentle heat into carbon dioxide and water, thus: —

$$H_2CO_3 = CO_2 + H_2O$$

**188. Carbonates** are salts of carbonic acid. They are common substances, and, unlike the acid, are stable under ordinary conditions. Many have important uses (see Calcium and Sodium Carbonates). The most abundant natural carbonates are those of calcium, magnesium, and iron. Immense quantities of sodium and potassium carbonates are manufactured.

Many carbonates are insoluble in water, e.g. calcium carbonate, the test for carbon dioxide depending on this fact. Others, e.g. sodium and potassium carbonates, are very soluble. There are two classes of carbonates, the normal and the acid. Normal sodium carbonate is $Na_2CO_3$, and acid sodium carbonate is $HNaCO_3$. The latter is often called sodium bicarbonate. Normal calcium carbonate is $CaCO_3$, and acid calcium carbonate is

THIS PAGE IS LOCKED TO FREE MEMBERS
Purchase full membership to immediately unlock this page

Get Smart

Over 2,000 years of human knowledge in 797,885 volumes

Instant access $8.99/month

Continue

*Fair usage policy applies

This chemical change takes place in every coal fire (Fig. 45). The oxygen of the air entering at the bottom of the fire unites with the carbon to form carbon dioxide; the latter gas in passing through the hot carbon of the fire is reduced to carbon monoxide. Some of the carbon monoxide escapes, while some burns with a flickering bluish flame on the top of the fire and forms carbon dioxide. If steam is passed through a very hot hard coal or coke

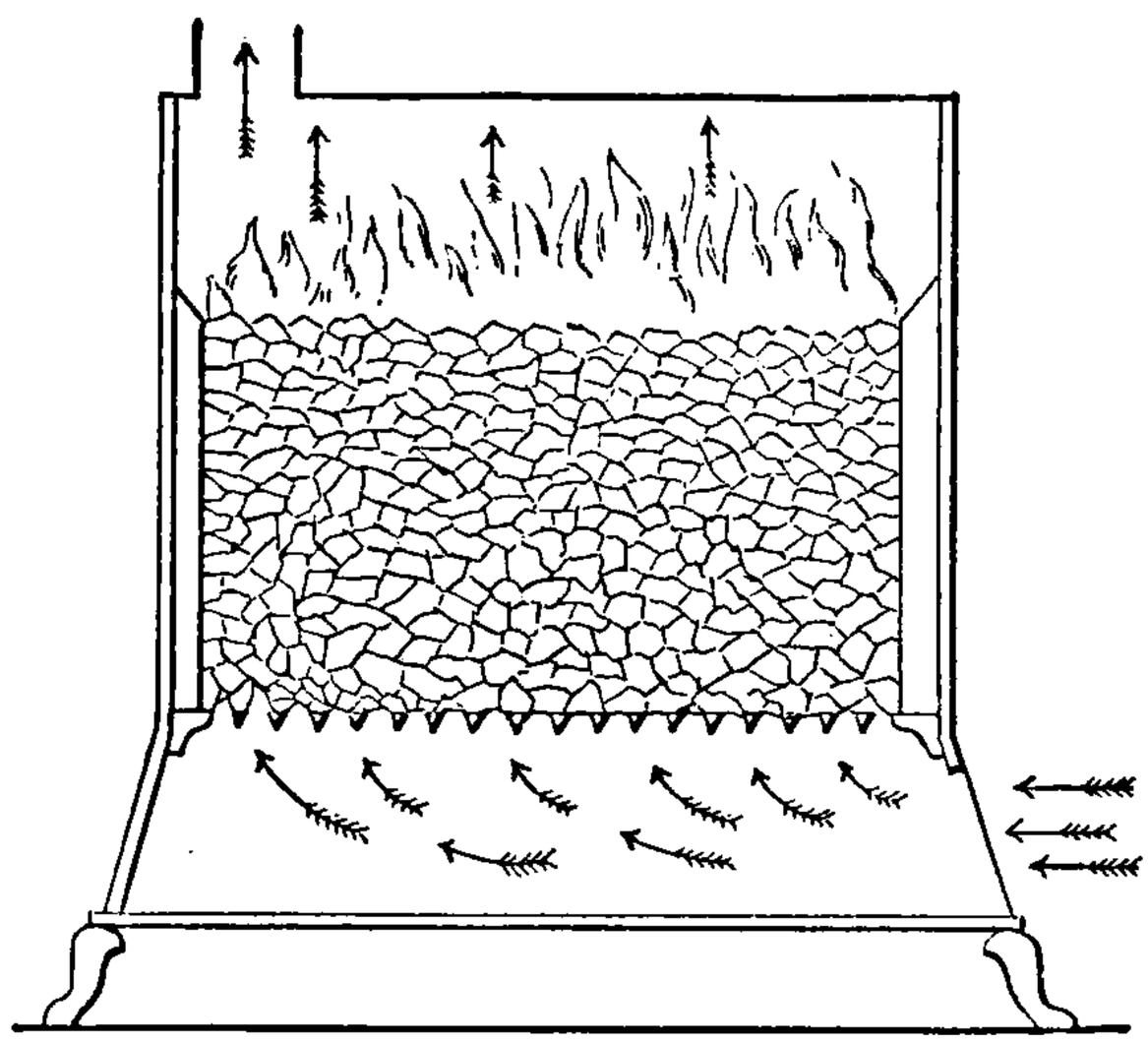

$$2\,CO + O_2 = 2\,CO_2$$

$$CO_2 + C = 2\,CO$$

$$2\,C + 2\,O_2 = 2\,CO_2$$

Fig. 45. — Essential Chemical Changes during Combustion in a Coal Fire.

fire, a mixture of carbon monoxide and hydrogen is formed; this mixture enriched by vapor from oils is known as **water gas** (**206–7**). If steam and air are together passed through the hot carbon, the gaseous product contains nitrogen and some carbon dioxide besides carbon monoxide and hydrogen; it is called fuel or **producer gas,** and since it is easily made and liberates considerable heat in burning, it is used extensively as a fuel in industrial processes, e.g. in making open hearth steel.

Carbon monoxide is usually prepared in the laboratory by heating a mixture of oxalic acid and sulphuric acid in a flask, and collecting the gaseous product over water. The oxalic acid decomposes thus: —

$$\underset{\text{Oxalic Acid}}{C_2H_2O_4} = \underset{\text{Carbon Monoxide}}{CO} + \underset{\text{Carbon Dioxide}}{CO_2} + H_2O$$

The carbon dioxide may be removed by passing the mixed gases through a solution of sodium hydroxide. (See Part II, Exp. **91**.)

Carbon monoxide is a gas without color, odor, or taste, and is only slightly soluble in water. It burns with a bluish flame, forming carbon dioxide, thus: —

$$\underset{\text{Carbon Monoxide}}{2CO} + O_2 = \underset{\text{Carbon Dioxide}}{2CO_2}$$

*Carbon monoxide is extremely poisonous*, and it is very dangerous because the lack of odor prevents its detection in time to escape its stupefying effect. Many deaths have been caused by breathing air containing it. Carbon monoxide impoverishes the blood by forming a compound with one of its constituents, and persons who have been poisoned by this gas cannot usually be revived by air, as in the case of suffocation by carbon dioxide. It is an ingredient of ordinary illuminating gas, and care should always be taken to prevent the escape of illuminating gas (as well as the gas from a coal stove or furnace) into rooms occupied by human beings. The pulmotor is often used to revive persons who have been overcome by illuminating gas (**19**). At a high temperature carbon monoxide readily reduces oxides, and it is, therefore, an important agent in the reduction of iron ores in the blast furnace. This reaction may be represented thus: —

$$\underset{\text{Iron Oxide}}{Fe_2O_3} + \underset{\text{Carbon Monoxide}}{3CO} = \underset{\text{Iron}}{2Fe} + \underset{\text{Carbon Dioxide}}{3CO_2}$$

Carbon monoxide, which is sometimes called carbonic oxide, forms no acid and no salts. It does not turn calcium hydroxide milky, thus being distinguished from carbon dioxide. Its blue flame serves as a **test** to distinguish it from other combustible gases.

## Hydrocarbons

**190. Hydrocarbons** are compounds of carbon and hydrogen. There are about two hundred. They are found in petroleum and its products (gasoline, kerosene, naphtha, lubricating oils, paraffin wax, etc.), coal tar, coal gas, and natural gas. They are prepared by the distillation of petroleum and coal tar. All hydrocarbons burn readily, water and carbon dioxide being the products of combustion. Some form highly explosive mixtures with air, and great care should be taken in using naphtha and gasoline, which contain volatile hydrocarbons.

**191. Methane,** $CH_4$, is found in coal mines. It is called **fire damp** by miners. It is formed in marshy places by the decay of vegetable matter under water, and is sometimes called **marsh gas.** The illuminating gas manufactured from coal (**208**) is about 35 per cent methane, while natural gas, which issues from the earth in Pennsylvania, West Virginia, Ohio, and other localities contains about 90 per cent of methane.

Methane is usually prepared in the laboratory by heating a mixture of sodium acetate, sodium hydroxide, and lime. It may also be prepared by the interaction of aluminium carbide and water, thus:—

$$\underset{\text{Aluminium Carbide}}{Al_4C_3} + \underset{\text{Water}}{12H_2O} = \underset{\text{Methane}}{3CH_4} + \underset{\text{Aluminium Hydroxide}}{4Al(OH)_3}$$

Methane is a gas without color, taste, or odor. It burns with a pale, luminous, rather hot flame; it is the chief heat producing substance in natural gas, which is extensively used in natural gas regions for heating houses and as fuel in many industries, e.g. making steel, glass, brick, and pottery. A mixture of methane with oxygen or air explodes violently when ignited by a spark or flame. Ter-

THIS PAGE IS LOCKED TO FREE MEMBERS
Purchase full membership to immediately unlock this page

HISTORY

Tens of thousands of important historical sources, many previously unobtainable, are now available for the first time with a Forgotten Books Full Membership.

Unlimited Access
$8.99/month

Continue

*Fair usage policy applies

Two important substitution products of methane are chloroform ($CHCl_3$) and iodoform ($CHI_3$). Chloroform is a heavy, sweet, volatile liquid, and iodoform is a yellow, disagreeable smelling solid. Chloroform is used as an anæsthetic, i.e. to produce unconsciousness in surgical operations. Iodoform is used as an antiseptic dressing for cuts and wounds.

**192. Ethylene,** $C_2H_4$, is usually prepared in the laboratory by heating a mixture of concentrated sulphuric acid and ethyl alcohol. Ethylene is a colorless gas with a pleasant odor. It burns with a yellow flame, and is one of the illuminating constituents of coal gas (**208**). The complete combustion of ethylene is represented thus: —

$$\underset{\text{Ethylene}}{C_2H_4} + 3O_2 = \underset{\text{Carbon Dioxide}}{2CO_2} + \underset{\text{Water}}{2H_2O}$$

**193. Acetylene,** $C_2H_2$, is prepared commercially and in the laboratory by the interaction of calcium carbide and water, thus: —

$$\underset{\text{Calcium Carbide}}{CaC_2} + \underset{\text{Water}}{2H_2O} = \underset{\text{Acetylene}}{C_2H_2} + \underset{\text{Calcium Hydroxide}}{Ca(OH)_2}$$

Acetylene is a colorless gas, and if prepared from calcium carbide the odor is unpleasant. It is poisonous if breathed in large quantities, but much less dangerous than gases containing carbon monoxide. Acetylene burns in the air with a luminous, smoky flame. But when considerable air is mixed with the gas as the latter issues from a small opening, the mixture burns with a brilliant, white flame, which does not smoke. It is used as an illuminant in localities where ordinary illuminating gas is not available; it is also used in automobile lights. With a proper burner the combustion of acetylene is complete, and may be represented thus: —

$$\underset{\text{Acetylene}}{2C_2H_2} + \underset{\text{Oxygen}}{5O_2} = \underset{\text{Carbon Dioxide}}{4CO_2} + \underset{\text{Water}}{2H_2O}$$

Ordinary gas burners cannot be used for acetylene because the flame produces soot. A common form of burner is shown in Fig. 48. The acetylene as it escapes from the supply pipe (A) into the burner sucks in air through the small side holes (B). This mixture, upon ignition, burns as a small flat flame at right angles to the burner (Fig. 49). (See Part II, Exp. **87**.)

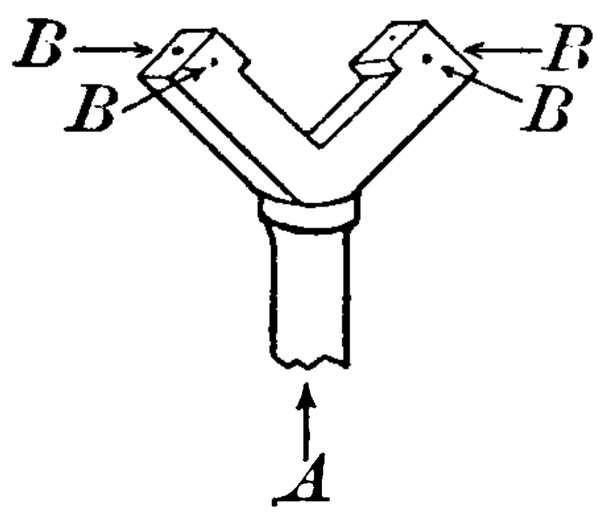


Fig. 48. — Acetylene Burner.

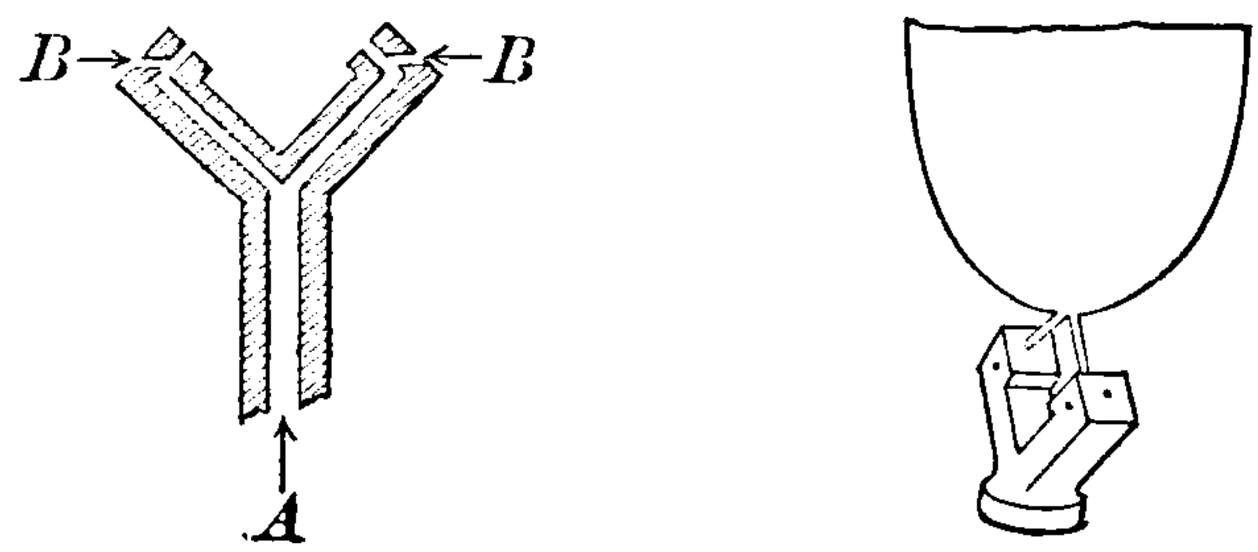


Fig. 49. — Acetylene Flame.

**194. Generation of Acetylene.** — The gas can be generated by putting the calcium carbide into a flask provided with a dropping funnel and delivery tube, and allowing water to drop slowly upon the carbide; the gas thus generated can be collected in bottles over water. There are two classes of commercial generators. In small ones water is added to the calcium carbide; such generators may be safely used on the lecture table and in a bicycle or automobile lantern. In larger generators calcium carbide drops automatically into a large volume of water and the gas collects in a reservoir which by its pressure regulates the machine. A solution of acetylene in acetone is often used as a source of the gas, especially for automobiles.

**195. Oxy-acetylene Flame.** — A mixture of acetylene and considerable oxygen burns with an intensely hot flame, the temperature being nearly 3000° C. The oxy-acetylene flame is used to sever large pieces of metal. Ordinary tools cut hard metals slowly, but the oxy-acetylene flame when its tip is passed slowly across the

metal burns its way through steel shafts and girders with astonishing rapidity. Metal structures, such as fences, bridges, frames of buildings, abandoned battleships, etc., are speedily dismantled by this flame. The fire department of large cities is equipped with an oxy-acetylene outfit for cutting a passage through steel doors of vaults or effecting an entrance into parts of a fireproof building. The oxy-acetylene flame is also used for welding metals. The burner (Fig. 50) is constructed like the oxy-hydrogen blowpipe (**26**). Oxygen enters at A and acetylene at B. The tip of the burner does not melt because the flame at that point is not very hot.

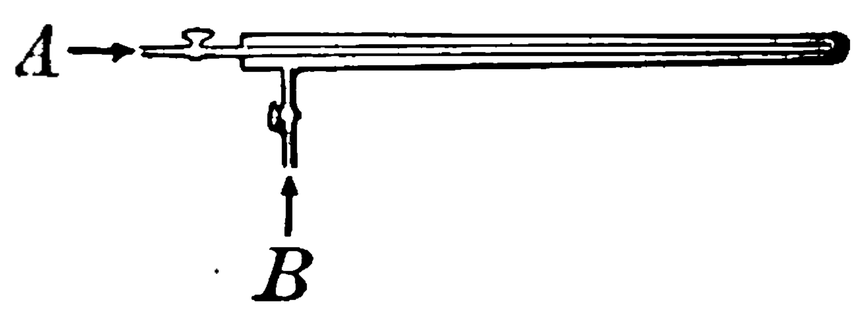

Fig. 50. — Oxy-acetylene Blowpipe.

**196. Petroleum** is the source of many useful hydrocarbons. It is obtained from the earth in many parts of the world. In the United States the chief localities are Ohio, Pennsylvania, Texas, and California. The immense deposits in Russia are in the Baku district on the Caspian Sea.

Crude petroleum is an oily liquid with an unpleasant odor. Its color varies from amber to black; some kinds are greenish in reflected light. Its composition is complex, but all varieties are essentially mixtures of liquid hydrocarbons in which gaseous and solid hydrocarbons are dissolved. Some varieties contain compounds of nitrogen and of sulphur.

In some localities the oil issues directly from the earth, but it is usually necessary to drill a deep hole and insert a pipe into the porous rock containing oil. Sometimes the oil "spouts" out of the well when first drilled, but usually a pump is needed to draw it to the surface.

Some crude petroleum is used in making water gas and as fuel for locomotives and steamships, but most of it is

THIS PAGE IS LOCKED TO FREE MEMBERS
Purchase full membership to immediately unlock this page

Get Smart

Over 2,000 years of human knowledge in 797,885 volumes

Instant access $8.99/month

Continue

*Fair usage policy applies

and vegetable oils. Vaseline finds extensive use as an ointment. Paraffin wax is made into candles and into a water-proof coating for many substances. The final residue in the still is mainly carbon and is called petroleum coke; it is made into electric light carbons. The oils separated from petroleum are often called mineral oils, because they differ in composition from oils obtained from plants and animals. (See Fats, Chapter XVII.)

**197. Coal Tar** is another source of hydrocarbons. This is a viscous liquid obtained as a by-product in the manufacture of coal gas (**205**). Like petroleum it is a complex mixture, and by its distillation are obtained the hydrocarbons benzene (also called benzol, $C_6H_6$), naphthalene ($C_{10}H_8$), and anthracene ($C_{14}H_{10}$), as well as many other carbon compounds, especially phenol. (See Part II, Exp. **99**.)

**198. Benzene** is a light, colorless liquid. It burns with a luminous, smoky flame. Ordinary illuminating gas owes its luminosity partly to benzene (**208**). It dissolves fats, resins, iodine, sulphur, and rubber. It should not be confused with *benzine*, which is a mixture of other hydrocarbons obtained from petroleum. Benzene is chiefly used in preparing organic compounds, e.g. **nitrobenzene** ($C_6H_5.NO_2$), a yellow poisonous liquid which has the odor of bitter almonds. Nitrobenzene is made into **aniline** ($C_6H_5.NH_2$) from which are manufactured aniline dyes. **Naphthalene** ($C_{10}H_8$) is a white, lustrous crystalline solid having a penetrating, disagreeable odor. It is familiar under the name of "moth balls" and is used as a substitute for camphor in protecting cloth from moths. From **anthracene** ($C_{14}H_{10}$) is made **alizarin,** which is a dyestuff used to produce brilliant, fast colors. **Phenol** ($C_6H_5.OH$) is a white crystalline solid. It has a peculiar, smoky odor. A solution of phenol in water is called **carbolic acid** and is used as a disinfectant.

## Carbides

**199. Carbides** are compounds of carbon and certain elements, especially metals. Many are made by subjecting a mixture of carbon and oxides to the intense heat generated in an electric furnace.

**200. Silicon Carbide or Carborundum,** SiC. — This carbide is a crystallized solid, which varies in color from white to brownish-green or black. It is extremely hard, being nearly as hard as diamond. Acids do not affect it, but it is decomposed by fusion with potassium hydroxide or other alkalies. The extreme hardness of carborundum has led to its extensive application as an abrasive, and large quantities are made into a great variety of grinding wheels, whetstones, and polishing cloths. (See Part II, Exp. **93**.)

Carborundum is manufactured by fusing a mixture of sand (silicon dioxide, $SiO_2$) and coke (carbon, C) in an electric furnace constructed on the resistance type (Fig. 51). It is essentially a large rectangular box with permanent ends and loosely built sides. Each end is provided with a heavy metal plate. The wires for the electric current are attached to the outer ends of these plates, while the huge carbon electrodes fit into the inner ends, and project into the furnace. A cylindrical core of granulated coke makes an electrical connection between the electrodes. The mixture of sand and coke (to which salt and sawdust are added to contribute to the fusion and porosity) is packed around this core inside the box. The heat generated by the resistance of the carbon core to the passage of the powerful current of electricity produces a chemical change essentially as follows: —

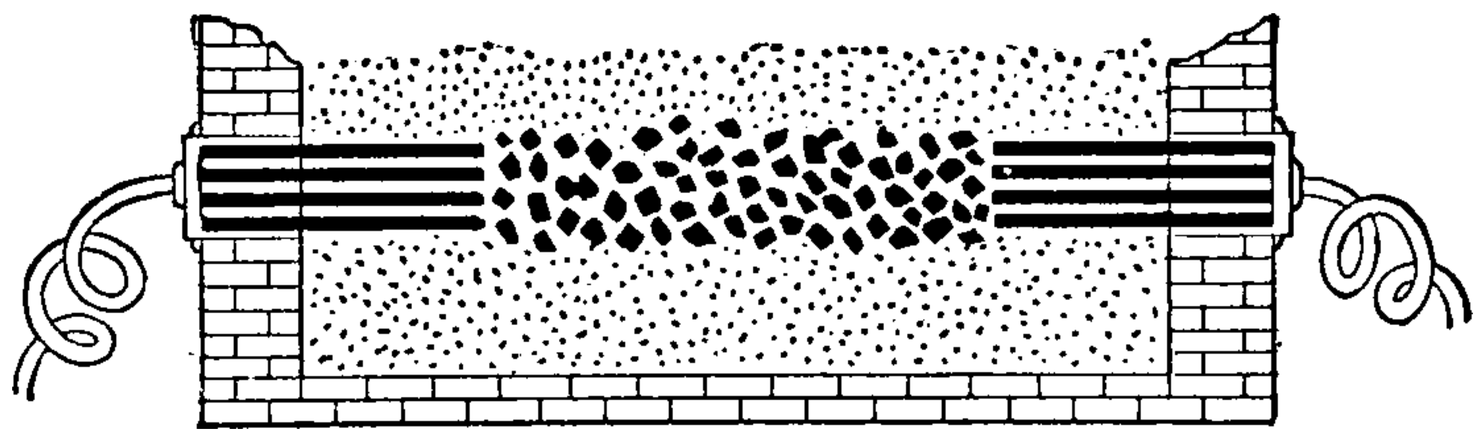

Fig. 51.—Electric Furnace — Resistance Type.

$$\underset{\text{Silicon Dioxide}}{SiO_2} + \underset{\text{Carbon}}{3C} = \underset{\text{Silicon Carbide}}{SiC} + \underset{\text{Carbon Monoxide}}{2CO}$$

When the operation is over, the furnace is allowed to cool, the side walls are pulled down, and the carborundum is removed.

**201. Calcium Carbide,** $CaC_2$, is a brittle, dark gray, crystalline solid. The most striking and useful property is its action with water, acetylene being formed, thus: —

$$\underset{\text{Calcium Carbide}}{CaC_2} + \underset{\text{Water}}{2H_2O} = \underset{\text{Acetylene}}{C_2H_2} + \underset{\text{Calcium Hydroxide}}{Ca(OH)_2}$$

Calcium carbide is used to generate acetylene gas. This gas burns with a brilliant flame, and is used as an illuminant (**193, 194**).

Calcium carbide is made from lime (calcium oxide, CaO) and coke or coal in an electric furnace. The chemical change, like that in the manufacture of carborundum, is caused solely by the intense heat and may be represented thus: —

$$\underset{\text{Carbon}}{3C} + \underset{\text{Calcium Oxide}}{CaO} = \underset{\text{Calcium Carbide}}{CaC_2} + \underset{\text{Carbon Monoxide}}{CO}$$

The furnace in which calcium carbide is made is sketched in Fig. 52. The mixture of coke and lime (shown in the furnace) is introduced through the trap cover A and slowly sinks down into the space where the intense heat is produced by the electricity as it passes between the electrodes G and E, E. The liquid calcium carbide is drawn off through F. The carbon monoxide rises through the pipes D, D and enters the upper part of the furnace, together with air supplied through C, C; this

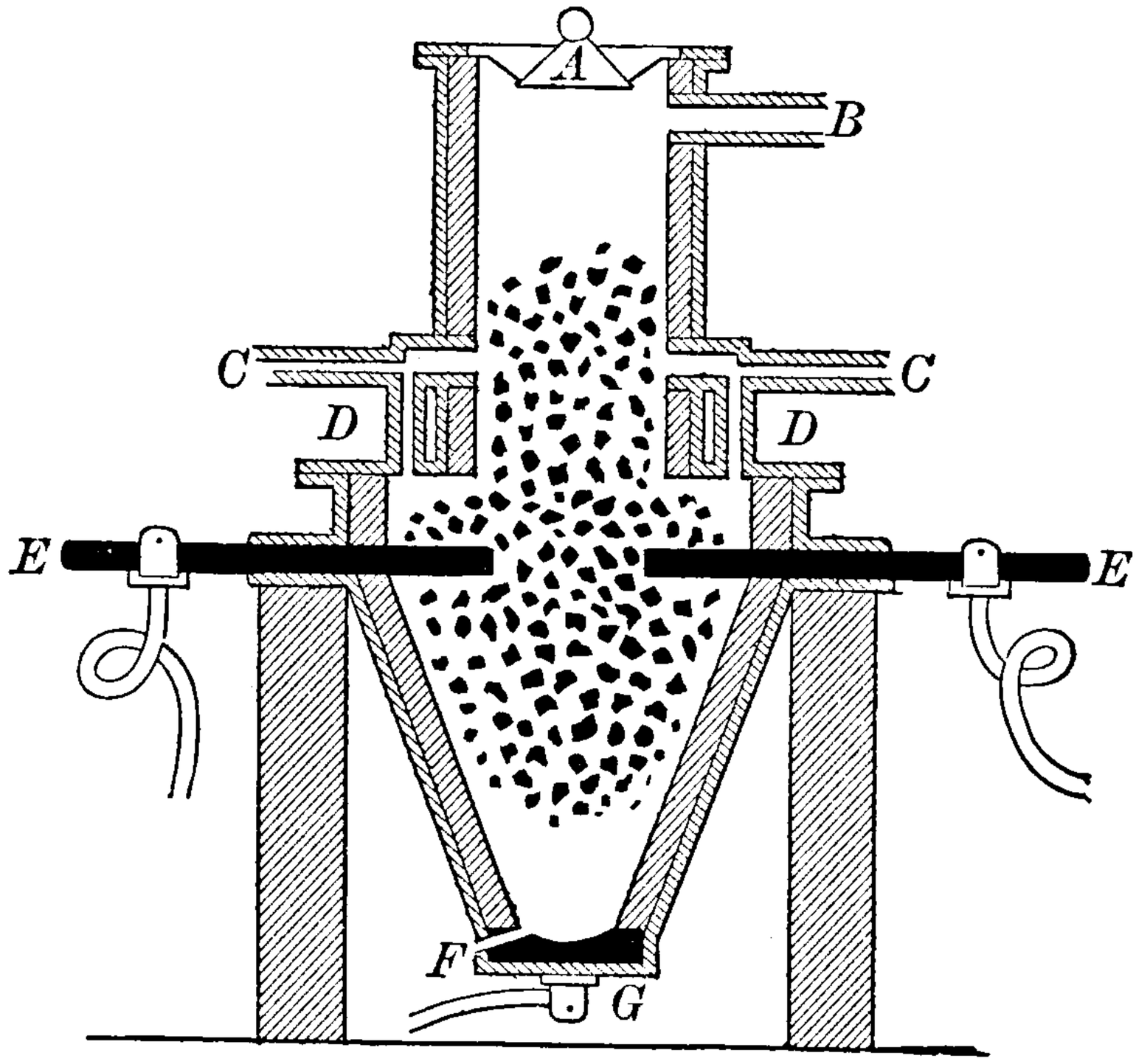


Fig. 52. — Electric Furnace for Making Calcium Carbide.

THIS PAGE IS LOCKED TO FREE MEMBERS
Purchase full membership to immediately unlock this page

HISTORY

Tens of thousands of important historical sources, many previously unobtainable, are now available for the first time with a Forgotten Books Full Membership.

Unlimited Access
$8.99/month

Continue

*Fair usage policy applies

(*d*) Carbon in paint making. (*e*) The cycle of carbon in nature. (*f*) History of carbon dioxide.

**5.** Describe fully the action of carbon dioxide on calcium hydroxide. Express the reaction by an equation.

**6.** What is the test for (*a*) carbon, (*b*) carbon monoxide, (*c*) carbon dioxide, (*d*) a carbonate?

**7.** Suggest methods of proving that (*a*) $CO_2$ is the formula of carbon dioxide and (*b*) CO of carbon monoxide.

**8.** Give the equations for (*a*) the oxidation of carbon to carbon monoxide and (*b*) the reduction of carbon dioxide to carbon monoxide.

**9.** Illuminating gas, water gas, and the gas that escapes from a coal fire are poisonous. Why? What is a pulmotor and for what is it used?

**10.** Describe acetylene. How is it prepared? Give the equation for the reaction. Summarize the properties of acetylene.

**11.** Describe the acetylene (*a*) flame, (*b*) burner, and (*c*) generator.

**12.** Essay topics: (*a*) The oxygen helmet and its use. (*b*) Miners' safety lamps. (See Miners' Circulars 4 and 12, Bureau of Mines, Washlugton, D.C.)

**13.** What is kerosene? Define the term *flashing point.*

**14.** What properties of amorphous carbon, e.g. lampblack, make it a useful ingredient of printer's ink and of paint?

## PROBLEMS

**1.** Calculate the percent of carbon in (*a*) carbonic anhydride, (*b*) acid calcium carbonate, (*c*) carbonic oxide, (*d*) $C_{12}H_{22}O_{11}$, (*e*) $C_2H_6O$, (*f*) marble.

**2.** What weight of carbon is contained in 2 l. of carbon monoxide? In 2 l. of carbon dioxide? (Standard conditions.)

**3.** What volume at standard conditions is occupied by (*a*) 70 gm. of carbon dioxide, and by (*b*) 45 gm. of carbon monoxide?

**4.** The volume of one gram of carbon dioxide is measured at 20° C. and 765 mm. What is its volume?

**5.** If 12 grams of carbon are burned to carbon dioxide, what will be the volume of the gas compared with 1 gram of hydrogen at the same temperature and pressure?

**6.** How much oxygen by weight and by volume (standard conditions) is needed to convert the following into carbon dioxide: (*a*) 1 kg. of pure charcoal, (*b*) a diamond weighing 250 milligrams, and (*c*) 30 gm. of graphite?

**7.** A volume of carbon dioxide measures 575 cc. at 16° C. and 765 mm. What will be its volume and weight under standard conditions?

**8.** Thirty grams of carbon are burned to carbon dioxide. What weight of potassium chlorate must be decomposed to provide the oxygen?

# CHAPTER XVI

## ILLUMINATING GASES — FLAMES

**203. Illuminating Gases.** — Besides acetylene (**193**) there are other kinds of illuminating gas. **Pintsch gas** is made from petroleum by heating the vaporized oil to a high temperature and is often called an oil gas. It burns with a brilliant flame and is used for lighting railway cars. Coal gas and water gas, however, are the most important.

**204. Coal Gas** is made by heating bituminous coal out of contact with air and purifying the volatile product. (See Part II, Exps. **94, 98, 99, 100.**) (Compare **176, 196.**)

**205. Manufacture of Coal Gas.** — A diagram of a coal gas plant is shown in Fig. 53. The coal is heated several hours in closed retorts. The volatile products pass from the retorts into the hydraulic main. Here some of the tar is deposited and ammonium compounds are dissolved by the water which flows constantly through the main. The ammoniacal liquor and tar flow into the tar well. From the hydraulic main the hot and impure gas passes through the condenser. The main object of the condenser is to cool the gas and remove tar. An exhauster transfers the gas from the condenser into the scrubber (and onward through the purifiers into the gas holder). The purpose of the scrubber is to remove the remaining ammonium compounds, the carbon dioxide and hydrogen sulphide, and the last traces of tar. From the scrubber the gas passes into the purifiers. These contain lime or iron oxide, or both, which remove any remaining carbon dioxide and sulphur compounds. The purified gas next passes through a large meter, which records its volume, into a gas holder from which the gas is forced through the pipes to the consumer.

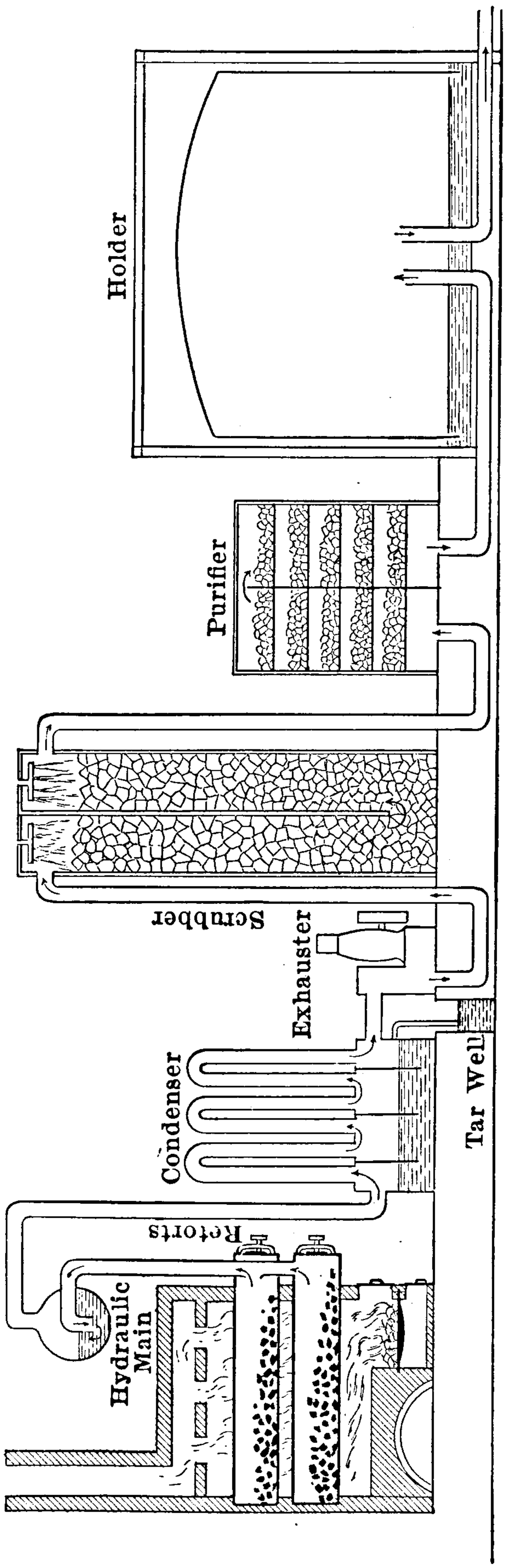


Fig. 53. — Diagram of Coal Gas Plant.

A ton of good gas coal yields about 10,000 cubic feet of gas, 1400 pounds of coke (**178**), 120 pounds of tar, 20 gallons of ammoniacal liquor (**101**), and a varying amount of gas carbon (**179**). The tar, or coal tar as it is often called, collected from the hydraulic main and condenser, is a thick, black, foul smelling liquid. Some is used for preserving timber, making tarred paper and black varnishes, and as a protective paint. Most of it is separated by distillation into its important constituents (**197**).

**206. Water gas** is made by forcing steam through a mass of hot coke or anthracite coal and mixing the gaseous product with hot gases obtained from oil. It is essentially a mixture of hydrogen, carbon monoxide, and a small proportion of hydrocarbons.

**207. Manufacture of Water Gas.** — The essential parts of the apparatus are shown diagrammatically in Fig. 54. Air is forced by a blower through the fire in

THIS PAGE IS LOCKED TO FREE MEMBERS
Purchase full membership to immediately unlock this page

Get Smart

Over 2,000 years of human knowledge in 797,885 volumes

Instant access $8.99/month

Continue

*Fair usage policy applies

through the purifying apparatus into a holder. The oil is added to provide illuminants, since the flame from the hydrogen-carbon monoxide mixture is very feeble.

Water gas is seldom burned alone, but is usually mixed with 60 or 70 per cent of coal gas. This mixture is popularly called "illuminating gas." Owing to the high percentage of carbon monoxide, water gas and mixtures containing it are poisonous (**189**).

**208. Characteristics of Illuminating Gases.** — Illuminating gases have a disagreeable odor. They are complex mixtures. The following table shows the approximate composition of average samples: —

COMPOSITION OF ILLUMINATING GASES (BY VOLUME)

| Constituents | Coal Gas | Water Gas | Oil Gas |
|---|---|---|---|
| Methane | 34.5 | 19.8 | 38.8 |
| Illuminants | 5.0 | 16.6 | 45.0 |
| Hydrogen | 49.0 | 32.1 | — |
| Carbon Monoxide | 7.2 | 26.1 | — |
| Carbon Dioxide | 1.1 | 3.0 | — |
| Nitrogen | 3.2 | 2.4 | 1.1 |

Methane, hydrogen, and carbon monoxide burn with a feeble (non-yellow) flame, and are often called diluents; they furnish heat, but no light. The illuminants consist of ethylene ($C_2H_4$), acetylene ($C_2H_2$), benzene ($C_6H_6$), and other hydrocarbons.

The luminosity of an illuminating gas is measured by a photometer and is expressed in candles or **candle power.** The determination is made by comparing the light produced by burning the gas with the light produced by a standard wax candle or a standard flame. The candle power of coal gas is about 17, of water gas about 25, and

of oil gas 50 or more. Ordinary illuminating gas has a varying candle power, since it is usually a mixture of coal gas and water gas. The use of mantles has greatly improved the methods of lighting by gas (**213**).

## Flames

**209. General Nature of Flames.** — The term *flame* is ordinarily applied to a light produced by burning gases in air. If the flame contains much free carbon, the unconsumed particles are rendered more or less incandescent by the heat liberated by the chemical change and the flame is luminous. It should not be overlooked that the flame from burning liquids and solids is due to burning gases. In an illuminating gas flame the gas itself, of course, is burning in air. In a lamp flame the gas that burns comes from the oil that is drawn up the wick by capillary attraction, and then volatilized by the heat. Similarly, in a candle flame the burning gas comes from the melted and volatilized wax.

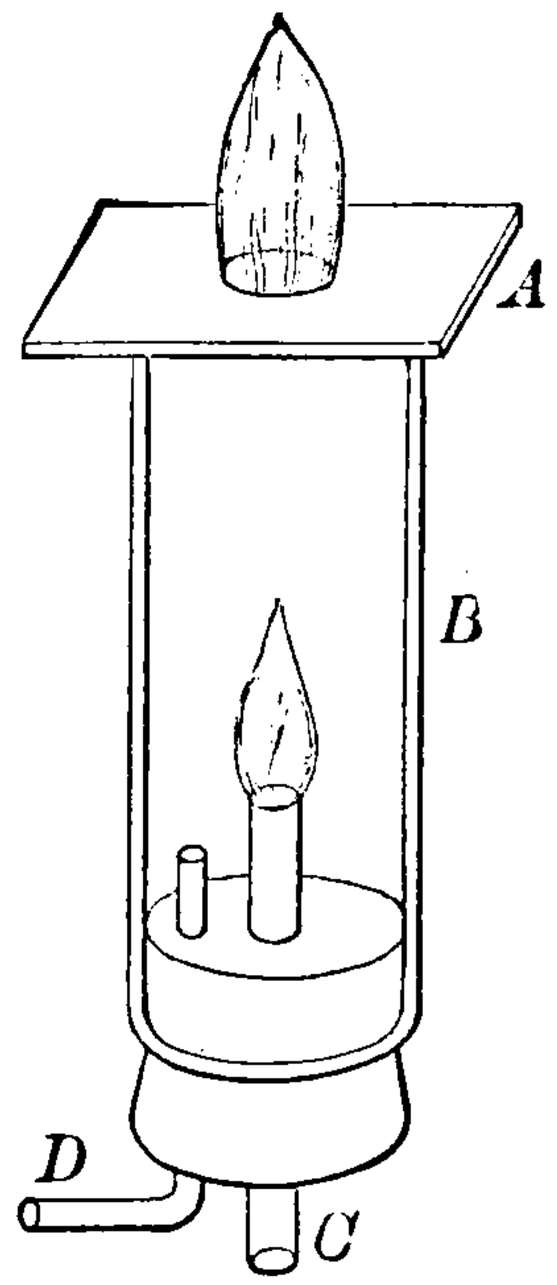

Fig. 55. — Combustion in Illuminating Gas and in Air.

Ordinary flames are due primarily to the combination of the oxygen of the air with the gas or its elementary constituents. We usually burn gases in an abundance of air, but a flame is produced, though not so conveniently, if the conditions are reversed.

A simple experiment illustrates this fact. In the apparatus shown in Fig. 55, the lamp chimney B is filled with illuminating gas through the bent tube D, and its escape is temporarily prevented by closing the opening in the asbestos cover A. The gas is lighted at the lower end of the tube C, and when the hole in A is uncovered, the flame rises

in C and continues at the end within the chimney as long as air is drawn up through C and gas supplied through D. The unconsumed illuminating gas escapes through the hole in A, and if ignited, burns much like the other flame, as shown in the figure. The gas pressure must be carefully regulated to produce a satisfactory result. Chemically both flames are alike. The outer flame is in an atmosphere of air, while the inner flame is in an atmosphere of illuminating gas; but both flames are due to the combination of oxygen with the elementary constituents of the illuminating gas.

**210. Structure and Characteristics of Luminous Flames.** — The luminous hydrocarbon flame has several distinct parts, and the structure of the flame is essentially the same, whether produced by burning illuminating gas, kerosene oil, or candle wax. The candle flame may be taken as the type. Examination of the sketch of an enlarged vertical section shown in Fig. 56 reveals four somewhat conical portions. (1) Around the wick there is a dark cone (A), filled with combustible, but unburned, gases formed from the melted wax. As already stated it is possible to draw off these gases and light them. (2) Around the lower part of the dark cone is a faint bluish cup-shaped part (B, B). It is the lower portion of the exterior cone where complete combustion of the gases occurs, since plenty of oxygen from the air reaches this portion. (3) Above the dark cone is the luminous portion (C). It is the largest and most important part of the flame. It is usually spoken of as "the flame." Combustion is incomplete here, because little or no oxygen can pass through the exterior cone. The temperature is high, however, and the hydrocarbons undergo complex changes. Acetylene

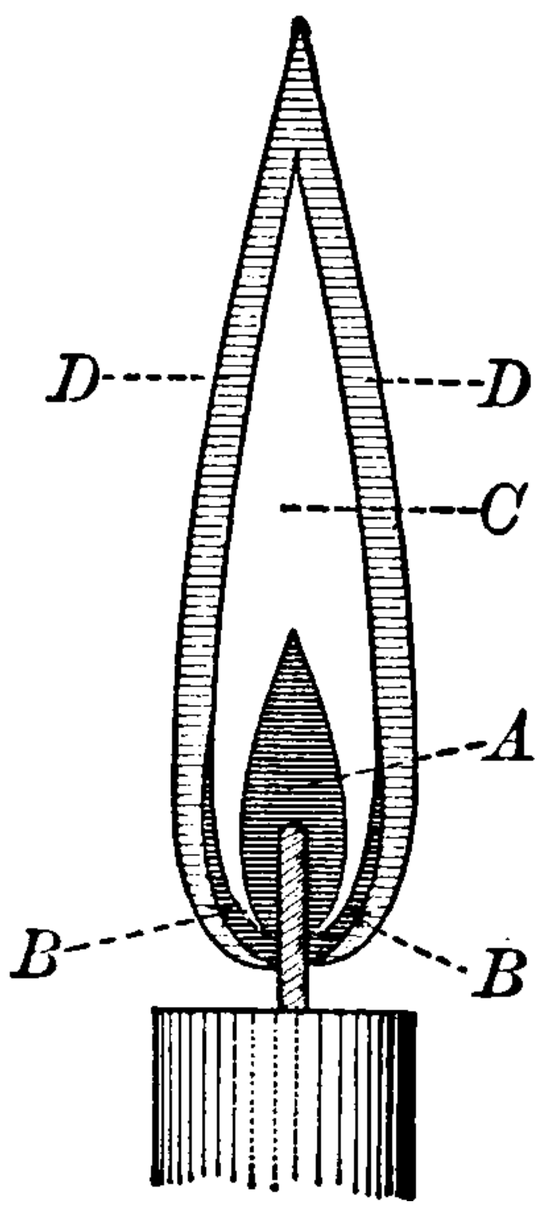

Fig. 56. — Parts of a Typical Candle Flame.

THIS PAGE IS LOCKED TO FREE MEMBERS
Purchase full membership to immediately unlock this page

HISTORY

Tens of thousands of important historical sources, many previously unobtainable, are now available for the first time with a Forgotten Books Full Membership.

Unlimited Access
$8.99/month

Continue

*Fair usage policy applies

flame smokes, loses its yellow color, and finally goes out; but if a coil of hot wire is used, the flame burns unchanged (Fig. 58).

Not all luminous flames are hydrocarbon flames. Thus, magnesium burns with a brilliant flame. Its luminosity is due to the incandescence of solid particles of magnesium oxide. Similarly, the bright flame of burning phosphorus is accounted for by the incandescent particles of solid phosphorus pentoxide. (See also **213.**)

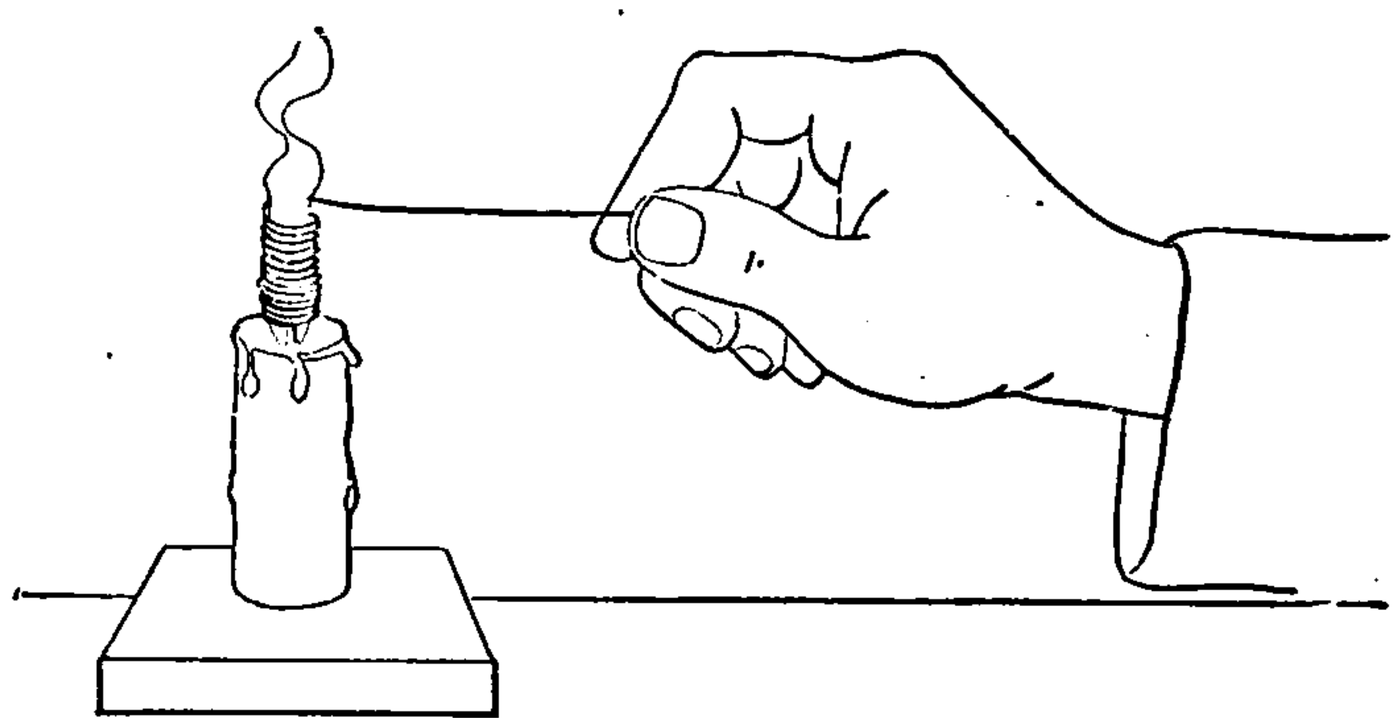

Fig. 58. — Effect of Lowering the Temperature of a Candle Flame.

**211. Non-Luminous Flames.** — The hydrogen flame is almost invisible in air and oxygen, but pale blue in chlorine. The flames of carbon monoxide and methane are also faint blue. The most common non-luminous flame is the Bunsen flame.

**212. The Bunsen Burner and its Flame.** — When illuminating gas is mixed with air before burning, and the mixture burned in a suitable burner, a flame is produced which is non-luminous, very hot, and deposits no carbon. Such a flame is called the **Bunsen flame,** for it was first produced in a burner devised by the German chemist Bunsen. This burner is used in laboratories as a source of heat (Fig. 59). The gas enters the base and escapes through a very small opening into the long tube, which screws down over this opening. At the lower end of the long tube there are two holes, through which air is drawn by the gas as

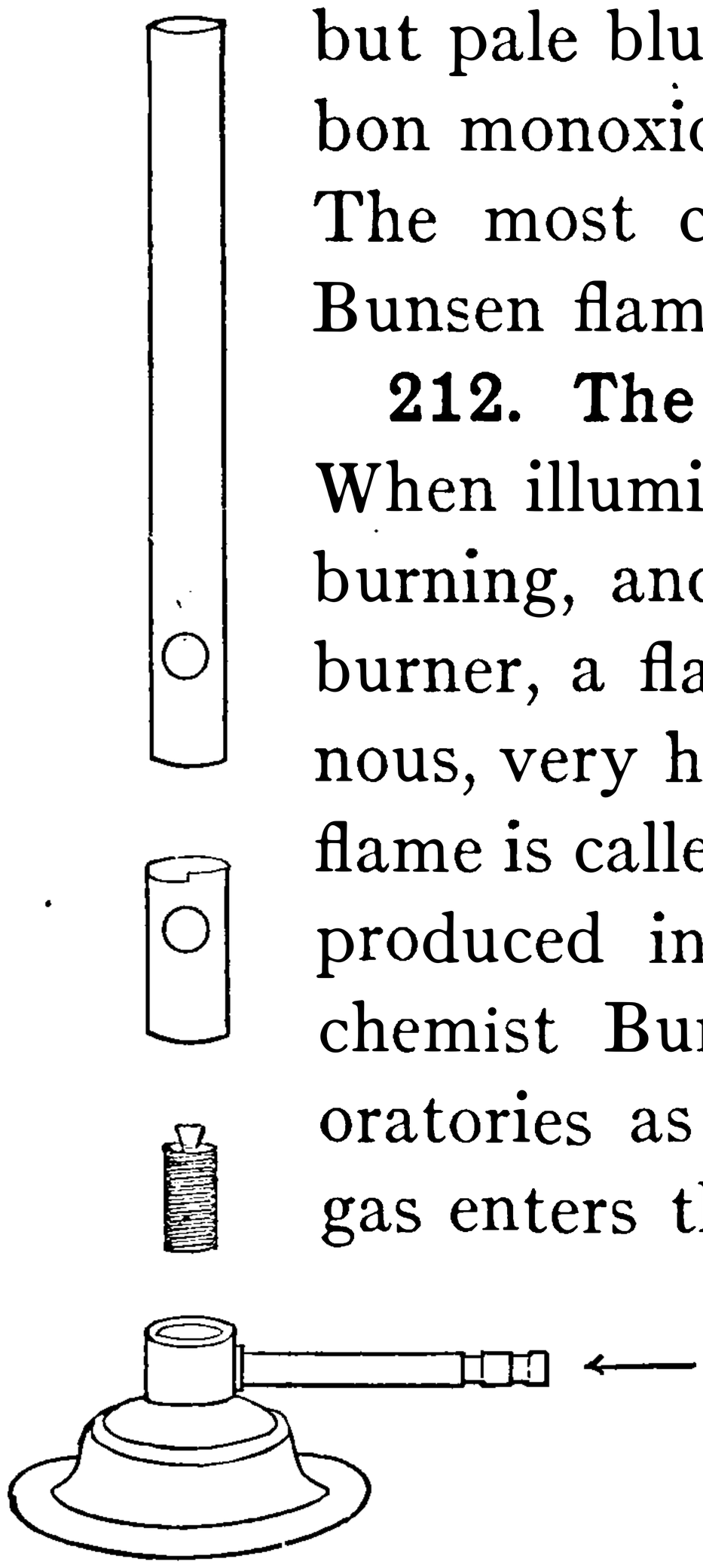

Fig. 59. — Parts of a Typical Bunsen Burner.

it rushes out of the small opening. The gas and air mix as they rise in the tube, and this mixture of air and gas burns at the top of the long tube. The size of the air holes at the bottom of the long tube may be changed by a movable ring, thus varying the volume of the entering air. When the holes are open, the typical non-luminous, hot Bunsen flame is formed. The combustion of the constituents of the hydrocarbons is practically complete. The non-luminous flame is free from soot, therefore apparatus heated by this flame is not blackened.

The gas burns at the top of the tube and not inside, because the proper mixture of gas and air flows out more quickly than the flame can travel back through the tube to the small exit. If the gas supply is slowly decreased, the flame becomes smaller, disappears with a slight explosion, and burns at the small gas opening inside the tube. A sudden draft of air, too large holes at the lower end of the tube, or too low gas pressure also may cause the flame to "strike back," as this action is called. This change is due to the fact that the tube contains an explosive mixture of air and illuminating gas, through which the flame travels downward faster than the mixture escapes from the tube. This modified flame, which has a pale color, a disagreeable odor, and deposits soot, should be extinguished and the proper flame produced before further use.

The Bunsen flame has many characteristic properties. Its color is bluish, and the cones have different tints. The outermost cone is not easily distinguished; so for practical purposes it is convenient to divide the flame into two parts, — an inner cone of unburned gases and an outer cone in which all the carbon is consumed.

The existence of these two cones can be shown by simple experiments. A match held near the outer part of the flame takes fire quickly. Combustible gases can be drawn off by a tube from the inner cone and ignited, as in the candle flame. A match laid for an instant across the top of the tube is charred only at the two points where it touches the outer cone; and a sulphur match suspended by a pin across the top of an unlighted burner is not kindled until some time after the gas is first lighted (Fig. 60). Finally, a wire gauze, if pressed down upon the flame, shows a dark central portion surrounded by a luminous ring due to the inner and outer cones respectively (see Fig. 47). (See Part II, Exp. **96.**)

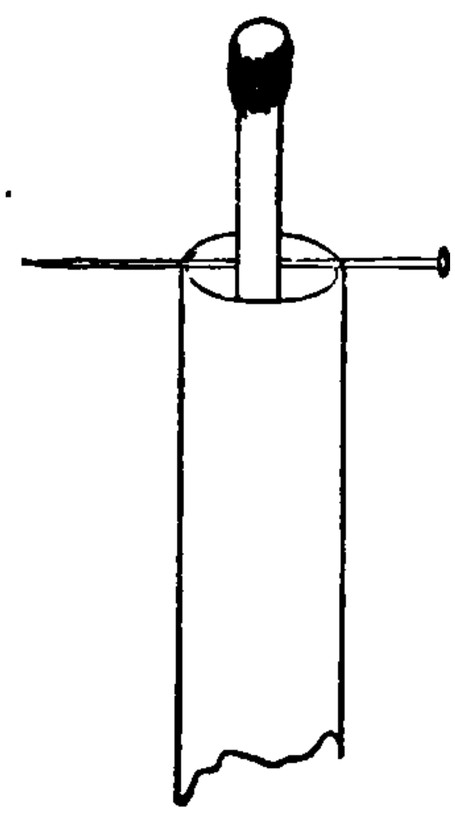

Fig. 60. — Experiment Showing the Inner Cone of Unburned Gases in the Bunsen Flame.

**213. Welsbach Light.** — The Bunsen flame is extensively used in producing the Welsbach light. The non-luminous flame heats a mantle consisting of a firm network of 99 per cent of thorium oxide and 1 per cent of cerium oxide, and the mantle glows with an intense light. The candle power varies from 40 to 100. (See Part II, Exp. **102.**)

**214. Oxidizing and Reducing Flames.** — The outer portion of the Bunsen flame is called the **oxidizing flame,** because here oxygen is abundant. The inner portion is called the **reducing flame,** because here the excess of reducing gases withdraws oxygen from oxides. A sketch of the general relation of these flames is shown in Fig. 61. A is the most effective part of the oxidizing flame, and B of the reducing flame. At A metals are oxidized, and at B oxygen compounds are reduced. (See Part II, Exps. **97, 101.**)

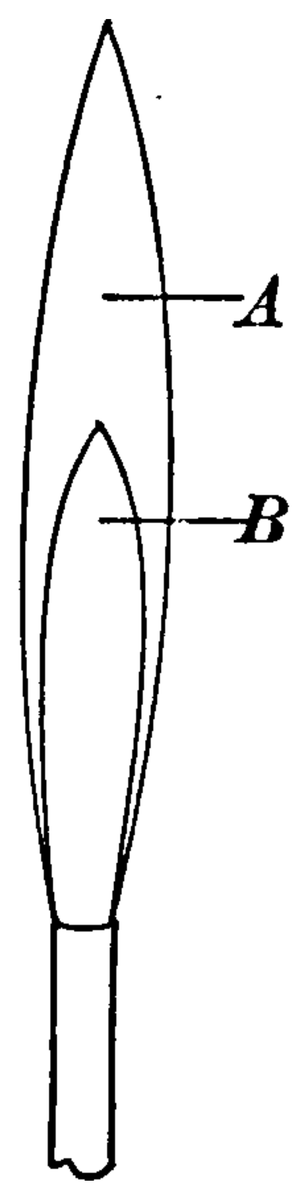


Fig. 61.—The Oxidizing (A) and Reducing (B) Flames.

THIS PAGE IS LOCKED TO FREE MEMBERS
Purchase full membership to immediately unlock this page

Get Smart

Over 2,000 years of human knowledge in 797,885 volumes

Instant access $8.99/month

Continue

*Fair usage policy applies

mantle has been removed and compare with a Bunsen burner. (*b*) Examine the burner and flame of a gas cooking range. Compare both with a Bunsen burner and flame. (*c*) Examine a kerosene lamp and sketch the burner. (*d*) Test illuminating gas for sulphur compounds (**274**).

## PROBLEMS

**1.** A candle weighing 50 gm. consists of a wax composed of 88 per cent carbon and 12 per cent hydrogen. What weight of carbon dioxide and of water will be formed by burning half the candle?

**2.** The capacity of a gas holder is 1,000,000 cu. ft. Calculate the volume of the ingredients (see table **208**) if the holder were full of (*a*) coal gas, of (*b*) water gas, and of (*c*) equal portions of these gases.

**3.** How much dry illuminating gas at 10° C. and 530 mm. will fill a tank having a capacity of 800 cu. m.? (Specific gravity of illuminating gas is 0.5 referred to air and a liter of air weighs 1.293 gm.)

**4.** A bottle inverted over water contains 53.2 cc. of illuminating gas at 870 mm. and 18.5° C. What is the volume of the dry gas under standard conditions?

**5.** How many liters of hydrogen and of carbon monoxide at 10° C. and 750 mm. will be formed by passing 100 gm. of steam over incandescent carbon?

**6.** An acetylene gas plant consumes 100 cubic feet an hour. How much calcium carbide would be used in a month of 30 days, if the gas is burned an average of 5 hours a day?

**7.** The vapor density of a compound of hydrogen and carbon is .875. Its composition is C = 85.714 and H = 14.286. Calculate its molecular formula.

**8.** What volume of air (containing 21 per cent of oxygen by volume) will be required for the combustion of 100 tons of coal, assuming that the coal is 80 per cent pure carbon and burns to carbon dioxide?

# CHAPTER XVII

## OTHER CARBON COMPOUNDS — FOOD AND NUTRITION

**215. Introduction.** — Carbon forms a very large number of compounds. Several *organic* compounds, as most carbon compounds are called, have already been discussed in Chapters XV and XVI. A few others will be considered in the present chapter, especially in their relation to food and nutrition.

**216. Composition of Organic Compounds.** — Although the number of organic compounds is very large, they contain only a few elements. Hydrocarbons, as already stated, contain only carbon and hydrogen. Vegetable substances, typified by starch, sugar, and fruit acids and flavors, contain carbon, hydrogen, and oxygen. Animal substances, like albumin, gelatin, and lean meat contain nitrogen as well as carbon, hydrogen, and oxygen; some also contain sulphur or phosphorus. Fats contain carbon, hydrogen, and oxygen. (See Part II, Exp. **103.**)

Many organic compounds contain radicals. These **radicals** are groups of atoms analogous to hydroxyl (OH) and ammonium ($NH_4$), and like other radicals they exist only in combination. The radical $C_2H_5$ is called ethyl. It is present in many organic compounds, and its presence in ordinary alcohol gives rise to the scientific name, ethyl alcohol. Methyl ($CH_3$) is another important radical, and phenyl ($C_6H_5$) is especially common in the benzene series of organic compounds. The names of many radicals are derived from the name of the corresponding hydrocarbon, e.g. methyl from methane, ethyl from ethane.

**217. Classification of Organic Compounds.** — In this chapter we shall study (1) Carbohydrates, (2) Alcohols, (3) Acids, (4) Esters, (5) Fats, Glycerin, and Soap, (6) Proteins, (7) Formaldehyde, Acetone, and Ether.

## Carbohydrates

**218. Carbohydrates.** — The most important carbohydrates are the sugars, starch, and cellulose. They contain carbon, hydrogen, and oxygen — the last two elements in the ratio in which they form water, hence the term *carbohydrate*.

**219. Sugars.** — The popular term **sugar** means almost any sweet substance found in fruits, nuts, vegetables, sap of trees, etc., though it is usually restricted to the ordinary white sugar obtained from sugar cane and sugar beet. Chemically, there are many different sugars. The most important is ordinary sugar or **cane sugar,** which is also called **sucrose** or saccharose. Other sugars are dextrose, levulose, lactose, and maltose.

**220. Sucrose,** $C_{12}H_{22}O_{11}$, is widely distributed in nature. Sugar cane contains about 18 per cent and sugar beets from 12 to 15 per cent. Considerable is also found in the sugar maple, sorghum, sweet fruits, many nuts, blossoms of flowers, and honey. The source of sucrose is sugar cane and sugar beet.

Sucrose is a white, crystallized solid; rock candy is well crystallized sugar. It is very soluble in water, one part of water dissolving about three times its weight of sugar at ordinary temperatures. If sugar is carefully heated to about 160° C., it melts, and on cooling forms a glassy solid. As the temperature is raised, the sugar begins to decompose, and at about 210° C. water is given off and

THIS PAGE IS LOCKED TO FREE MEMBERS
Purchase full membership to immediately unlock this page

HISTORY

Tens of thousands of important historical sources, many previously unobtainable, are now available for the first time with a Forgotten Books Full Membership.

Unlimited Access
$8.99/month

Continue

*Fair usage policy applies

The same change is brought about by a substance called invertase (see enzymes, below). **Dextrose** is a white solid about three fifths as sweet as sucrose. It is very soluble in water, but crystallizes from it with difficulty. Dextrose is found in honey and in many fruits, especially grapes, and is sometimes called **grape sugar.** Another name for it is **glucose.** The thick sirup commercially called glucose contains about 40 to 50 per cent of dextrose. It is manufactured by heating starch with dilute sulphuric acid; if the process is carried far enough, the product is a hard, waxlike solid known as commercial grape sugar, which is almost pure dextrose. Glucose is an inexpensive substitute for sucrose and is extensively used in making candy, jellies, sirups, and other sweet mixtures. **Levulose** is also a sweet, white solid found in fruits and honey, and is often associated with dextrose. It is sometimes called **fructose** or **fruit sugar.**

Dextrose, and also levulose, is converted by yeast into ethyl alcohol and carbon dioxide, thus: —

$$\underset{\text{Dextrose}}{C_6H_{12}O_6} = \underset{\text{Ethyl Alcohol}}{2C_2H_5OH} + \underset{\text{Carbon Dioxide}}{2CO_2}$$

This chemical change is an example of **fermentation,** i.e. the conversion of an organic compound into simpler substances by the action of minute living organisms called ferments, or of the products secreted by them. These products are called **enzymes.** The alcoholic fermentation of dextrose is due to the enzyme called zymase (**235**). Other enzymes produce other kinds of fermentation, e.g. invertase transforms sucrose into dextrose and levulose. Dextrose and levulose are reducing agents. An alkaline solution of dextrose is used to reduce a silver solution and deposit the silver as a bright

film in making reflectors, mirrors, Dewar flasks, and thermos bottles. It also reduces a strongly alkaline mixture of copper sulphate and sodium potassium tartrate, known as **Fehling's solution.** When this solution is boiled with dextrose (or a reducing sugar), a reddish copper compound (cuprous oxide, $Cu_2O$) is formed. This experiment is often used as a **test for dextrose** and similar sugars. Solutions of dextrose and levulose rotate the plane of polarized light — dextrose to the right and levulose to the left. That is, when their solutions are placed in a sugar-polariscope and examined, the light instead of passing entirely through the instrument is extinguished; and in order to bring about illumination again, the plane of the polarized light must be rotated a certain number of degrees in order to compensate for the rotation caused by the sugar solution. By means of this instrument valuable information can be obtained about the kind and proportion of sugar in solutions. (See Part II, Exps. **105, 106, 107, 122.**)

**223. Isomerism.** — The formula of both dextrose and levulose is $C_6H_{12}O_6$, yet their properties are different. The difference is due to a different arrangement of the atoms in a molecule. Such compounds are called isomers and illustrate **isomerism.** There are many cases of isomerism among organic compounds, especially the carbohydrates.

**224. Lactose** occurs in the milk of mammals and is sometimes called **milk sugar.** It gives milk its sweet taste. Cow's milk contains from 3 to 5 per cent of lactose. Crystallized lactose ($C_{12}H_{22}O_{11}.H_2O$) is a rather hard, gritty solid, much like sucrose, though not so sweet or soluble. A solution of lactose turns the plane of polarized light to the right and reduces Fehling's solution. Lactose is not fermented by ordinary yeast, but a special ferment,

called lactic ferment, converts it into alcohol and lactic acid. The lactic acid gives milk its sour taste and also assists in curdling the milk, i.e. in changing the casein into a clot or curd. Lactose is obtained from whey, which is the liquid left after the solids have been pressed from milk curdled by rennet in the manufacture of cheese. Lactose is used in preparing infant foods and certain medicines.

**225. Maltose** is formed from starch by malt, hence the name maltose. The transformation is caused by the enzyme diastase. Malt is prepared by allowing moist barley to sprout in a warm place; the diastase forms during this process. Maltose ferments readily with yeast, forming alcohol and carbon dioxide, and is manufactured in large quantities for the commercial production of alcohol and fermented liquors (**235**). With dilute acids, maltose forms dextrose by hydrolysis. Like lactose, maltose is a sweet solid, very soluble in water, from which it forms crystals ($C_{12}H_{22}O_{11}.H_2O$); its solution turns the plane of polarized light to the right and reduces Fehling's solution.

**226. Starch** is a widely distributed and very abundant carbohydrate. It is found in wheat, corn, and all other grains; in potatoes, beans, peas, and similar vegetables; and in large quantities in rice, sago, tapioca, and nuts. Many parts of plants contain starch; for example, the stalk, stem, leaves, root, seed, and fruit. The food value of vegetables depends largely on the starch they contain. Very large quantities of starch are consumed as food; much is used in laundries, paper manufactories, and cotton cloth mills, and in the manufacture of glucose, alcohol and alcoholic beverages, and adhesives.

Starch, as usually seen, is a white mass, but really

THIS PAGE IS LOCKED TO FREE MEMBERS
Purchase full membership to immediately unlock this page

Get Smart

Over 2,000 years of human knowledge in 797,885 volumes

Instant access $8.99/month

Continue

*Fair usage policy applies

rise. Fermentation begins at once. Enzymes from the yeast change the starch into dextrose, or a similar fermentable substance, which undergoes fermentation, forming alcohol and carbon dioxide. The gases escape in part through the dough, which becomes light and porous. When the dough is baked, the heat kills the yeast plant and fermentation stops; but the alcohol, carbon dioxide, and some water escape and puff up the mass still more. The heat, however, soon hardens the starch, gluten, etc., into a firm, porous loaf.

**227. Glycogen,** $(C_6H_{10}O_5)_x$, is a white, amorphous solid without taste or odor, which resembles starch in some respects. It occurs abundantly in the liver and in smaller proportions in muscles, blood, etc. The liver acts as a sort of storehouse for glycogen, which is doled out to the body as needed. Glycogen plays somewhat the same rôle in animals as starch does in plants, and is sometimes called "animal starch." Glycogen forms an opalescent solution with water, is converted into maltose, dextrose, and dextrin by certain enzymes, gives a red color with iodine solution, and hydrolyzes to dextrose with acids; it does not reduce Fehling's solution nor ferment with yeast.

**228. Dextrin** ($C_{31}H_{62}O_{31}$ probably) is a light brown or white sweetish solid formed by heating starch to 200°–250° C. It dissolves in cold water and forms a sticky solution which is used as an adhesive, especially on postage stamps. It is also used in making mucilage, for thickening colors and sticking them to cloth in calico-printing, and as an ingredient of candies and beverages. When starched clothes are ironed, the hot iron changes some of the starch into dextrin, which gives a gloss to the fabric. Dextrin is also formed from starch when bread is baked or toasted. There are several dextrins. (See Part II, Exp. **125.**)

**229. Cellulose,** $(C_6H_{10}O_5)_x$, is the substance of the cell walls of which plants are made, and is therefore very widely distributed. Wood contains cellulose and related compounds, while cotton, linen, and the best qualities

of filter paper are nearly pure cellulose. Pure cellulose is a white substance, insoluble in most liquids, but soluble in a mixture of ammonia and copper hydroxide. Concentrated sulphuric acid dissolves it slowly; and if the solution is diluted and boiled, the cellulose is changed into a mixture of glucose and dextrin. Sulphuric acid of a special strength, if quickly and properly applied to paper, changes it into a tougher form called parchment paper. The latter is often substituted for animal parchment (e.g. sheepskin), and has a variety of uses.

**230. Derivatives of Cellulose.** — With nitric acid cellulose forms **cellulose nitrates.** One of the cellulose nitrates is **gun cotton.** It looks like ordinary cotton, and may be spun, woven, and pressed into cakes. It burns quickly, if unconfined, but when ignited by a percussion cap or when burned in a confined space, gun cotton explodes violently. It is used in blasting and for torpedoes and submarine mines. A mixture of gun cotton, ether, and alcohol soon becomes a plastic mass, which upon being rolled and carefully dried forms a transparent solid; this substance is called **smokeless powder,** and when exploded forms carbon dioxide and monoxide, nitrogen, hydrogen, and water vapor — all colorless gases. A solution of certain cellulose nitrates in a mixture of alcohol and ether is called **collodion.** When collodion is poured or brushed upon a glass plate or the skin, the solvent evaporates, leaving behind a thin film. It is used in preparing photographic films and as a coating for wounds. A mixture of camphor and cellulose nitrates is called **celluloid,** which is widely used in making photographic films and as a substitute for ivory. (See Part II, Exp. **126.**)

**231. Paper** consists chiefly of cellulose matted together. Most paper, especially that used for newspapers, is made from wood. Considerable writing paper, however, is still made from cotton and linen rags. In making paper from wood, the latter is reduced to a pulp, which is washed, spread on a frame or an endless wire gauze, partly dried, and pressed by rollers into a compact sheet. The pulp is prepared mechanically by grinding the wood upon a revolving stone or chemically by heating it under pressure with sodium hydrox-

ide or calcium bisulphite (acid calcium sulphite). Chemical pulp has longer and stronger fibers than mechanical pulp.

**232. Compounds related to Carbohydrates.** — Fruits contain pectocellulose, which is a compound of cellulose and a complex carbohydrate called **pectin.** When certain fruits, especially those not quite ripe, are boiled with water, the pectin undergoes hydrolysis and forms pectic acid and its salts, which set to a jellylike mass on cooling. The making of jellies from currants, grapes, apples, and other fruits depends on the presence and transformation of pectin. Fruits containing much acid lose their jellying property if boiled too long, owing to the decomposition of the pectic acid, while fruits which are too ripe do not form jelly because they contain only a small amount of pectin.

## Alcohols

**233. Methyl Alcohol,** $CH_4O$ or better $CH_3.OH$, is a colorless or slightly yellowish liquid, much like ordinary alcohol. It boils at about 66° C., and burns with a pale blue flame which deposits no soot. It mixes with water in all proportions. It is cheaper than ethyl alcohol, and is used as a fuel, a solvent for fats, oils, and shellac, and in the manufacture of varnishes, dyestuffs, and many chemicals. Methyl alcohol is often called **wood alcohol** or wood spirit, because it is one of the products obtained by the dry distillation of wood (**176**). It has a disagreeable odor and is poisonous. The concentrated liquid causes blindness and even death.

**234. Ethyl Alcohol,** $C_2H_6O$ or better $C_2H_5.OH$, is ordinary alcohol, and is often called **grain alcohol** or simply **alcohol.** It is a colorless, volatile liquid, with a pleasant odor. It is lighter than water, its specific gravity being about 0.8. It boils at about 78° C. and solidifies at about − 112° C. It burns with a hot, nearly colorless, non-smoking flame, and is sometimes used as a source of heat. Alcohol mixes with water in all propor-

THIS PAGE IS LOCKED TO FREE MEMBERS
Purchase full membership to immediately unlock this page

HISTORY

Tens of thousands of important historical sources, many previously unobtainable, are now available for the first time with a Forgotten Books Full Membership.

Unlimited Access
$8.99/month

Continue

*Fair usage policy applies

When the action is over, this mixture is cooled and diluted, and yeast is added. The zymase in the yeast changes the maltose into alcohol and carbon dioxide. The alcohol, which constitutes about 15 per cent of the final mixture, is separated by distillation. (See Part II, Exp. **127.**)

**236. Alcoholic Beverages.** — Wine, beer, and distilled liquors are essentially mixtures of alcohol and water made by the fermentation of sugars. They differ mainly in the proportion of alcohol. The particular flavor is due to small quantities of different substances which are intentionally added, obtained from the raw materials, or formed by special processes of manufacture. Beer contains from 3 to 7 per cent of alcohol, wines from 6 to 20, rum, brandy, and whisky from 40 to 60 or more per cent.

## Acids

**237. Acetic Acid,** $C_2H_4O_2$ or $CH_3.COOH$. — This is the most common organic acid. It is manufactured on a large scale by the dry distillation of wood (**176**). The dark-red watery distillate, which is called pyroligneous acid, contains about 10 per cent of acetic acid, besides methyl alcohol and acetone (**253**). Very concentrated acetic acid is called **glacial acetic acid,** because at about 17° C. it becomes an icelike solid.

Commercial acetic acid is a water solution containing about 30 per cent of pure acetic acid. It is a colorless liquid, having a rather pungent odor. It is a weak acid. Acetic acid is used to prepare acetates, dyestuffs, medicines, and white lead. Some of its salts — the acetates — are useful compounds, e.g. lead acetate and Paris green (see these salts). (See Part II, Exps. **110, 111, 112.**)

**238. Vinegar** is dilute acetic acid, containing from 4 to 6 per cent of the acid. It is prepared by oxidizing dilute alcohol, the essential change being represented thus: —

$$\underset{\text{Alcohol}}{C_2H_6O} + \underset{\text{Oxygen}}{O_2} = \underset{\text{Acetic Acid}}{C_2H_4O_2} + \underset{\text{Water}}{H_2O}$$

The transformation is accomplished by fermentation. When dilute solutions of alcohol, e.g. beer or weak wines, are exposed to air, they slowly become sour, owing to the conversion of alcohol into acetic acid. The change is caused by the presence and activity of a ferment known as *mycoderma aceti*, or "mother of vinegar." Strong wines and pure dilute alcohol do not become sour, because the ferment cannot live in such liquids. Substances containing starch or fermentable sugars, e.g. fruit juices, cider, and molasses, slowly ferment when exposed to the air (which always contains the organisms necessary for the chemical transformations), forming alcohol first and finally vinegar. Cider vinegar is made this way. Vinegar is often made by the quick vinegar process. Dilute impure alcohol is introduced at the top of a vat filled with beechwood shavings soaked in old vinegar, trickles through the shavings, and collects at the bottom; holes at the bottom and top allow air to enter and escape freely (Fig. 64). In its passage it comes in contact with the ferment and oxygen, and is partially converted into vinegar. The operation is repeated until the change is complete. Thus prepared, the vinegar lacks the flavor, odor, and color of cider vinegar, but these deficiences may be artificially supplied. Vinegar is used as a condiment and in making pickles and similar relishes.

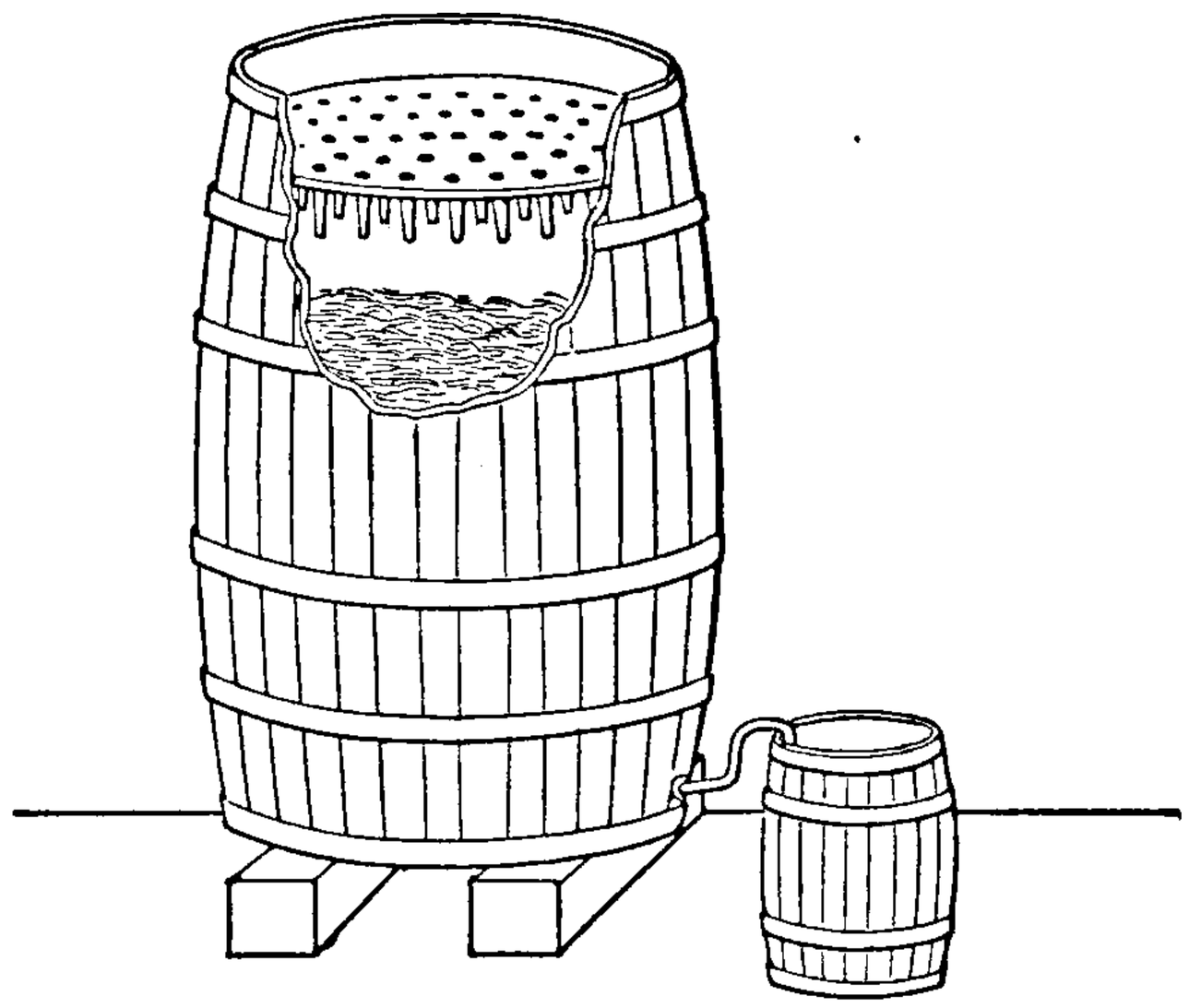

Fig. 64. — Apparatus for Manufacturing Vinegar.

**239. Butyric Acid,** $C_4H_8O_2$, is the acid which gives the disagreeable odor to rancid butter. A derivative occurs in sweet butter. Simple derivatives of **stearic acid** ($C_{18}H_{36}O_2$) and **palmitic acid** ($C_{16}H_{32}O_2$) are found in beef suet, mutton fat, butter, and other fats; these two acids are white solids. **Oleic acid** ($C_{18}H_{34}O_2$) is an oily liquid; certain derivatives are found in olive oil and many other oils and fats.

**240. Oxalic acid** occurs as a salt in rhubarb and sorrel. It is very poisonous. The acid and some of its salts decompose iron rust and inks containing iron, and are often used to remove such stains from cloth.

**241. Lactic acid,** $C_3H_6O_3$, occurs in sour milk, being a product of the action of certain bacteria (which are in the air) on the milk sugar (**224**). When sour milk is used in cooking, the baking soda ($HNaCO_3$) and lactic acid interact, producing soluble sodium lactate and carbon dioxide gas.

**242. Malic acid,** $C_4H_6O_5$, is found free or as salts in apples, pears, cherries, currants, gooseberries, rhubarb, grapes, and berries of the mountain ash tree; also in the roots, leaves, and seeds of many vegetables.

**243. Tartaric acid,** $C_4H_6O_6$, occurs as the potassium salt (acid potassium tartrate, $HKC_4H_4O_6$) in grapes and other fruits. During the fermentation of grape juice, the impure salt is deposited in the wine casks. From this **argol** or crude tartar the acid is prepared. Tartaric acid is a white crystallized solid, soluble in water and alcohol. It is used in dyeing, and as one ingredient of Seidlitz powders. In these and similar mixtures it serves to decompose the other ingredient, which is a carbonate (see Sodium Bicarbonate).

Purified acid potassium tartrate obtained from argol is commonly known as **cream of tartar.** It is extensively used in the manufacture of tartrate baking powders. These are mixtures of cream of tartar and sodium bicarbonate ($HNaCO_3$), and starch (**369, 437**). The starch is added mainly to protect the other ingredients from moisture and thus prevent the baking powder from deteriorating. When dissolved in water or moistened by the water in a food mixture, the two ingredients interact and liberate carbon dioxide as the main product, thus: —

THIS PAGE IS LOCKED TO FREE MEMBERS
Purchase full membership to immediately unlock this page

Get Smart

Over 2,000 years of human knowledge in 797,885 volumes

Instant access $8.99/month

Continue

*Fair usage policy applies

## Fats and Glycerin — Soap

**246. General Relations.** — Natural fats and oils are essentially mixtures of the esters, stearin, palmitin, and olein. Stearin and palmitin are solids at ordinary temperatures, but olein is a liquid. Hence hard fats are largely stearin and palmitin, while soft or liquid fats and oils are largely olein. These three compounds are esters derived from their corresponding acids by replacing hydrogen of the acid by the radical of the alcohol glycerin. The radical of glycerin is glyceryl, $C_3H_5$. Hence stearin is glyceryl stearate, palmitin is glyceryl palmitate, and olein is glyceryl oleate. When fats are heated with very hot steam or with sulphuric acid, they are changed into glycerin and the corresponding acids. Thus, with stearin the change is —

$$\underset{\text{Stearin}}{(C_{17}H_{35}.COO)_3C_3H_5} + 3H_2O = \underset{\text{Glycerin}}{C_3H_5(OH)_3} + \underset{\text{Stearic Acid}}{3C_{17}H_{35}.COOH}$$

But if fats are boiled with sodium hydroxide or a similar alkali, glycerin and an alkaline salt of the corresponding acid are formed. **Soap** is a mixture of such alkaline salts. In a few words, the general relations are these: (1) fats are esters; (2) treated with steam or acid, fats form glycerin and organic acids; (3) treated with alkalies, fats form glycerin and soap.

**247. Natural Fats and Oils.** — These are often complex mixtures. The chief ingredients, as already stated, are stearin, palmitin, and olein; small quantities of similar esters are usually present and often give certain fats characteristic properties. **Tallow** is about 66 per cent stearin and palmitin and 33 per cent olein; it is a solid fat obtained from the sheep and ox and is used in making soap and candles. **Lard** consists of olein, stearin, palmitin, and a little linolein; it is obtained from the fat of the hog and is used in cooking. **Olive oil,** which is obtained from the fruit of the olive tree, contains about 72

per cent of olein (and a similar fat) and about 28 per cent of stearin and palmitin, together with small quantities of linolein and other substances; the best qualities are used as salad oil, while cheap kinds are utilized in cooking, as a lubricant, and for making soap. **Cotton-seed oil** is similar to olive oil; it is obtained from the seeds of the cotton plant and is used extensively in cooking, as salad oil, and as a substitute for other oils. **Butter fat** is about 60 per cent olein, 30 per cent stearin and palmitin, and 5 per cent butyrin (glyceryl butyrate), together with small quantities of esters corresponding to capric, caprylic, and myristic acids. The pleasant flavor of butter is mainly due to the esters and some other substances that are present in small proportions. The total amount of fat in butter varies from about 78 to 94 per cent; according to the Federal Pure Food Law butter offered for sale must contain not less than 82.5 per cent of fat. Besides fat, butter contains water, casein, lactose, and salt. Butter is made by churning cream from cow's milk; this operation causes the fat globules to coalesce. Most butter is colored artificially, tumeric, annatto, and carrot juice being used for this purpose. Rancid butter is produced by the transformation of fat (by the action of bacteria) into butyric acid and other acids which have a disagreeable taste and odor. **Oleomargarine** and other substitutes for butter resemble real butter. They are made from different fats and oils; a little butter is added or the mixture is churned with milk to impart the desired flavor. (See Part II, Exp. **114.**)

**248.** **Glycerin,** $C_3H_8O_3$ or $C_3H_5.(OH)_3$, is a thick, sweet, colorless liquid. It mixes with water and with alcohol in all proportions. It absorbs moisture readily from the air. Heated in air it decomposes and gives off irritating gases, like those produced by burning fat.

Glycerin is used to make nitroglycerin (see below), toilet soaps, and printers' ink rolls; it is also used as a solvent, a lubricator, a preservative for tobacco and certain foods, a sweetening substance in certain liquors, preserves, and candy; as a cosmetic; and owing to its non-volatile and non-drying properties, it is used as an ingredient of inks for rubber stamps.

Glycerin is a by-product in the manufacture of soap and candles, or it is made directly by decomposing fats with steam under pressure (**249**).

As already stated, glycerin is an alcohol, and for this reason it is often called **glycerol.** When treated with a mixture of concentrated nitric and sulphuric acids, it forms an ester commonly known as **nitroglycerin** ($C_3H_5(ONO_2)_3$). This is a slightly yellow, heavy, oily liquid. It is the well-known explosive. When kindled by a flame, it burns without explosion; but if subjected to a shock or heated suddenly by a percussion cap, it explodes violently. Nitroglycerin is used in blasting; but since it is dangerous to handle and transport, it is usually mixed with some porous substance, such as infusorial earth, fine sand, clay, or even sawdust. In this form, it is called **dynamite.** Other explosives contain nitroglycerin, e.g. blasting gelatin and cordite.

**249. Soap,** as already stated, is a mixture of alkaline salts of organic acids, mainly stearic and palmitic acids. Soap is made by boiling fats with sodium hydroxide or potassium hydroxide solution. This process is called saponification. Sodium hydroxide produces hard soap, consisting chiefly of sodium palmitate, sodium stearate, and sodium oleate. Potassium hydroxide produces a soft, semi-fluid soap, which contains mainly the corresponding potassium salts. In the case of stearin (glyceryl stearate) the change may be represented thus: —

$$\underset{\text{Stearin}}{C_3H_5(C_{17}H_{35}.COO)_3} + \underset{\text{Sodium Hydroxide}}{3NaOH} = \underset{\text{Sodium Stearate}}{3C_{17}H_{35}COONa} + \underset{\text{Glycerin}}{C_3H_5(OH)_3}$$

The fats used in soap-making vary. Tallow, lard, palm oil, and cocoanut oil make white soaps. Bone grease or house grease, together with tallow, palm oil, cotton-seed oil, and rosin, make yellow soaps. Olive oil is used for making castile soap. Sodium and potassium soaps are soluble in water. If water contains dissolved calcium

THIS PAGE IS LOCKED TO FREE MEMBERS
Purchase full membership to immediately unlock this page

HISTORY

Tens of thousands of important historical sources, many previously unobtainable, are now available for the first time with a Forgotten Books Full Membership.

Unlimited Access
$8.99/month

Continue

*Fair usage policy applies

nitrogen. When burned, they produce a disagreeable odor and liberate ammonia — facts which may easily be verified by burning white of egg or gelatin. All proteins putrefy, that is, they decompose and evolve foul gases, such as hydrogen sulphide and derivatives of ammonia. (See Part II, Exps. **117, 118.**)

**251. Groups.** — **Albumins** occur in the white of eggs, milk, muscle, blood, and seeds of plants, especially in beans, peas, and lentils, and to some extent in wheat, rye, and barley. Albumins are soluble in pure cold water and are coagulated by heat; the latter property is readily seen when an egg is cooked. They are important ingredients of food. **Globulins** are also found in eggs, milk, muscle, blood, and seeds. The fluid part of the blood contains about 0.4 per cent of a globulin called fibrinogen, and from muscle are obtained myosin and myogen; the seeds of some legumes contain relatively large per cents of globulins, e.g. kidney beans 20, peas 10, lentils 13. Globulins are relatively insoluble in water and dilute acids, but they dissolve in dilute solutions of neutral salts (e.g. sodium chloride). **Glutelins** and **protamins,** as well as albumins and globulins, are ingredients of cereals. For example, gluten, the sticky substance in wheat flour that makes dough tenacious and elastic, contains glutenin and gliadin. Glutelins are insoluble in water and neutral salt solutions, but dissolve in very dilute acids and alkalies. **Albuminoids** are related to albumins. They make up the framework of animal tissues and are constituents of the epidermis. Thus, collagen is found in connective tissue and cartilage, and yields gelatin by boiling with water; the keratins are the chief constituents of the hard parts of the skin and its appendages (e.g. hair, hoofs, nails, feathers, etc.), and

elastin makes up the yellow elastic fibers of ligaments and the outer walls of arteries. Albuminoids are among the least soluble of the proteins. **Phosphoproteins** occur especially in milk and eggs. Casein is the chief nitrogenous substance in milk and imparts the bluish color to skimmed milk. The casein can be separated from milk as a more or less firm curd by dilute acids. Thus, when milk sours, the lactic acid formed by the fermentation of the lactose causes the casein to separate as a firm curd. Similar changes are produced by dilute sulphuric acid and rennet. Rennet and certain preparations (e.g. junket tablets) contain an enzyme (rennin) which causes the casein and fat to separate as a firm mass from which cheese can be made. Vitellin is an ingredient of hen's eggs. The most important of the **hemoglobins** is ordinary hemoglobin of the blood. Hemoglobin is a compound of a protein called globin and a substance containing iron, called hematin ($C_{34}H_{34}N_4FeO_5$ probably). Hemoglobin forms a readily decomposable compound with oxygen called oxyhemoglobin; these are the substances that distribute oxygen to the tissues of the body. Hemoglobin is a dark red solid which forms about 90 per cent of the solid matter of the red corpuscles of the blood. When oxygen of the inhaled air combines with the hemoglobin of the blood in the lungs, the bright red oxyhemoglobin is formed and this oxygenized blood, so to speak, in circulating through the body gives up its oxygen readily to the tissues; during the circulation, carbon dioxide — one of the waste products of vital processes — is taken up by the blood and carried to the lungs where it is exhaled along with other gases.

## Formaldehyde — Acetone — Ether

**252. Formaldehyde,** $CH_2O$, is a gas, which dissolves in water. It has an irritating odor. The commercial solution sold as **formalin** contains 40 per cent of formaldehyde. It hardens tissue and is used as a preservative in museums. It is a convenient and efficient disinfectant. When so used, the solution is vaporized in a special apparatus and the vapors conducted into the infected room. (See Part II, Exp. **128.**)

**253. Acetone,** $C_3H_6O$, is a colorless liquid which has an ethereal odor. It boils at about 56° C. and mixes in all proportions with water, alcohol, and ether. It is used as a solvent for fats, oils, and waxes, and in the preparation of smokeless powders and certain organic compounds. Acetone is one of the products obtained by the dry distillation of wood (**176**).

**254. Ethyl ether,** or ordinary ether, $C_4H_{10}O$, is a colorless, volatile liquid, with a peculiar, pleasing taste and odor. It boils at 35° C., and the vapor is very inflammable. The liquid should never be brought near a flame. It is somewhat soluble in water, and it also dissolves water to a slight extent. It mixes with alcohol in all proportions. It is a good solvent for waxes, fats, oils, and other organic compounds. Its chief use is as an anæsthetic. Ether is manufactured by heating a mixture of ethyl alcohol and sulphuric acid in the proper proportions. (See Part II, Exp. **129.**)

**255. Miscellaneous.** — Other aldehydes are **benzaldehyde** (oil of bitter almonds, $C_7H_6O$) and **vanillin** ($C_8H_8O_3$); both are used as flavors. Alkaloids are complex compounds found in plants; all contain nitrogen. They produce marked physiological effects. **Theine** or **caffeine** occurs in tea and coffee, and **theobromine** in cocoa and chocolate.

## Food and Nutrition

**256. Food and Nutrition.** — Foods are the substances that supply the body (1) with materials for its growth, maintenance, and repair, and (2) with energy for its activities. In a word, **food** supplies the body with building material and fuel. **Nutrition** is the process, or group

THIS PAGE IS LOCKED TO FREE MEMBERS
Purchase full membership to immediately unlock this page

Get Smart

Over 2,000 years of human knowledge in 797,885 volumes

Instant access $8.99/month

Continue

*Fair usage policy applies

i.e. the building up and tearing down processes, are usually included by the term *metabolism*.

TABLE OF COMPOSITION OF FOODS*

| Foods | Water | Protein | Fat | Carbo-hydrate | Mineral Matter |
|---|---|---|---|---|---|
| Apples | 84.6 | 0.4 | 0.5 | 14.2 | 0.3 |
| Bananas | 75.3 | 1.3 | 0.6 | 22.0 | 0.8 |
| Beans (dried) | 12.6 | 22.5 | 1.8 | 59.6 | 3.5 |
| Beefsteak (sirloin) | 61.9 | 18.6 | 18.5 | — | 1.0 |
| Celery | 94.5 | 1.1 | 0.1 | 3.3 | 1.0 |
| Cheese (cream) | 34.2 | 25.9 | 33.7 | 2.4 | 3.8 |
| Codfish (fresh) | 82.5 | 16.3 | 0.3 | — | 0.9 |
| Corn (green) | 75.4 | 3.1 | 1.1 | 19.7 | 0.7 |
| Eggs | 73.7 | 14.8 | 10.5 | — | 1.0 |
| Grapes | 77.4 | 1.3 | 1.6 | 19.2 | 0.5 |
| Ham (smoked) | 40.3 | 16.1 | 38.8 | — | 4.8 |
| Honey | 18.2 | 0.4 | — | 81.2 | 0.2 |
| Mutton (forequarter) | 52.9 | 15.3 | 30.9 | — | 0.9 |
| Oatmeal | 7.3 | 16.1 | 7.2 | 67.5 | 1.9 |
| Peanuts | 9.2 | 25.8 | 38.6 | 24.4 | 2.0 |
| Potatoes | 78.3 | 2.2 | 0.1 | 18.4 | 1.0 |
| Rice | 12.3 | 8.0 | 0.3 | 79.0 | 0.4 |
| Strawberries | 90.4 | 1.0 | 0.6 | 7.4 | 0.6 |
| Sugar (gran.) | — | — | — | 100.0 | — |
| Tomatoes | 94.3 | 0.9 | 0.4 | 3.9 | 0.5 |
| Walnuts (English) | 2.5 | 16.6 | 63.4 | 16.1 | 1.4 |

* A fuller table can be found in Bulletin 28 (Revised) or Farmers' Bulletin 142, United States Department of Agriculture, Office of Experiment Stations.

Digestive changes are partly mechanical and partly chemical. The chemical changes that occur during digestion are due mainly to **enzymes,** which transform carbohydrates, fats, and proteins into substances which are more readily soluble, diffusible, and better fitted for absorption. For example, pytalin of the saliva changes starch into maltose; other enzymes in the pancreatic and intestinal

juices also act upon carbohydrates and change them chiefly into dextrose. (See Part II, Exp. **124.**) The bulk of complex **carbohydrate** material after its change into maltose, dextrose, and similar sugars is absorbed by the blood. The blood always contains a small and nearly constant per cent of dextrose, but the excess is stored in the liver in the form of glycogen (**227**) which is given up again gradually to the blood as dextrose. During the circulation of the blood, dextrose and oxygen disappear in the muscles and eventually become carbon dioxide and water; much heat is liberated during this chemical transformation. Some **fat** undergoes complex changes, some is transformed into glycerin and acids related to palmitic acid, partly in the stomach and largely in the intestines, some is stored in the tissues, and some undoubtedly undergoes changes like the dextrose in the muscles. Probably some fat is converted into carbohydrate. The products of the transformation of **protein** are absorbed by the blood and thus become available as material for replacing worn-out tissue and contributing new tissue for the growth of our bodies. Protein products are essentially body builders, though some protein doubtless contributes to the formation of carbohydrate and fat, and, if these are not supplied by food, even performs their functions. Some protein serves as fuel, but this function belongs more especially to carbohydrate and fat. The end products of the metabolism of protein are compounds of nitrogen, chiefly urea ($CO(NH_2)_2$) which is excreted in solution from the body.

Water and mineral matter are not foods in a narrow sense, because they do not build tissue or furnish energy. Nevertheless both are indispensable for life processes. About 70 per cent of the weight of the body is **water.** It occurs in all the tissues and keeps them soft

and pliable. Water also serves as a solvent and transporter, carrying juices and digested food to all parts of the body and finally leaving the body loaded with waste matter. Some waste matter is eliminated from the body through the skin in the sweat. **Mineral matter** makes up about 4 per cent of the weight of the body and consists of compounds of the following elements (in order of abundance): Calcium, phosphorus, potassium, sulphur, sodium, chlorine, magnesium, iron (and minute quantities of iodine, fluorine, and silicon) (**8**). These elements supply the material for the rigid parts of the body. Thus, bones and teeth contain upwards of 69 per cent of mineral matter, largely calcium phosphate. They are also essential constituents of complex compounds in the tissues of important organs, e.g. muscles, brain, and nerves. Moreover, they furnish acids, bases, salts, and organo-metallic compounds, which give many fluids and juices of the body characteristic properties. Illustrations of this function are the hydrochloric acid of the gastric juice and the hematin of the blood corpuscles. Besides calcium and phosphorus compounds, sodium chloride is an essential inorganic compound; it is found in many parts of the body and is a necessary ingredient of blood and lymph. Phosphorus compounds are distributed in small quantities throughout the body and are as essential to every living cell as the protein itself, while calcium compounds are necessary for the coagulation of the blood and certain movements of the muscles. As a final result of metabolism, inorganic compounds are eliminated from the body chiefly as chlorides, sulphates, and phosphates of sodium, potassium, calcium, and magnesium.

**260. Food as a Source of Energy.** — The complex mechanical and chemical processes that occur during nutrition not only provide material for repairing and building the body but they also yield energy. That is, food is fuel in the sense that it yields (1) heat energy to keep the body warm and maintain the temperature best suited for the vital processes and (2) muscular and nervous energy to enable the body to do its work, e.g. move and give motion to things near it. Heat also results from the muscular work of the body, and probably the

THIS PAGE IS LOCKED TO FREE MEMBERS
Purchase full membership to immediately unlock this page

HISTORY

Tens of thousands of important historical sources, many previously unobtainable, are now available for the first time with a Forgotten Books Full Membership.

Unlimited Access
$8.99/month

Continue

*Fair usage policy applies

quantity of the food in a bomb calorimeter and measuring the amount of heat liberated. This amount of heat is sometimes called the heat of combustion of the substance. The unit commonly used in measuring heat of combustion is the large calorie (or Calorie), that is, the amount of heat that would raise the temperature of 1 kilogram of water 1° C. (Compare **164, 174.**) It is convenient to think of the large calorie as also the amount of heat energy equivalent to the mechanical energy that would lift 1 ton 1.54 feet high. The **bomb calorimeter** consists essentially of a heavy steel vessel, called a bomb, immersed in water in an outer vessel. A weighed amount of the food (or other substance) is first put in the bomb and a weighed amount of water in the outer vessel, the bomb is tightly closed, oxygen is forced in, and the bomb is then immersed in the water; as soon as the temperature of the water is constant (or its variations in temperature are known), the substance inside the bomb is ignited by electricity, and the rise in temperature of the water, as the substance burns, is accurately noted.

Food as eaten is not all digestible nor is the nutritive portion completely oxidized in the body, so the heat values of uneaten food obtained by the bomb calorimeter are not an accurate measure of energy produced by the bodily transformation of food. Such transformations are studied by a **respiration calorimeter.** This is a metal-walled chamber in which a man can live several days. Experiments with different forms of the respiration calorimeter show that (1) the actual material that is oxidized in the body yields the same amount of energy as if it were burned in the bomb calorimeter, (2) when a man does no external muscular work, all energy leaves the body as heat, but when he does muscular work, e.g. lifts

weights or drives a (stationary) bicycle, part of the energy appears in this external work and the rest is given off as heat, and finally (3) the energy given off as heat when the man rests or as combined heat and mechanical energy when he works equals the potential energy of the food material consumed in the body. The third result is instructive, for it appears that the body conforms to the **law of the conservation of energy,** viz. energy can be transformed without loss but it cannot be destroyed or created. Fuel values calculated by elaborate experiments with both the bomb and respiration calorimeters are called physiological fuel values. They are the fuel values of the part of the food that is actually transformed into energy in the body, — the real value of the food digested and oxidized. The physiological fuel values are the ones usually meant when the term *fuel value* is used. It is customary to state fuel value in Calories per pound, i.e. the number of Calories furnished by one pound of food. The fuel values of the foods whose composition is given in **258** are as follows: —

TABLE OF FUEL VALUE OF FOODS (CALORIES PER POUND)

| | | | | | |
|---|---|---|---|---|---|
| Apples | 290 | Corn | 470 | Peanuts | 2560 |
| Bananas | 460 | Eggs | 720 | Potatoes | 385 |
| Beans | 1605 | Grapes | 450 | Rice | 1630 |
| Beefsteak | 1130 | Ham | 1940 | Strawberries | 180 |
| Celery | 85 | Honey | 1520 | Sugar | 1860 |
| Cheese | 1950 | Mutton | 1595 | Tomatoes | 105 |
| Codfish | 325 | Oatmeal | 1860 | Walnuts | 3285 |

**263. Extension and Summary of Fuel Value of Food.** — An ordinary mixed diet contains protein, carbohydrate, and fat. The average proportions utilized by the body are approximately protein 92 per cent, carbohydrate 97,

and fat 95. This means, for example, if 53.1 per cent of a loaf of bread is carbohydrate, the body will appropriate as carbohydrate approximately 52 per cent of the weight of the bread. It should also be recalled that the fuel value is not the heat of combustion of the uneaten food, but of the food actually oxidized in the body. Inasmuch as protein is primarily a body builder and carbohydrates and fats are heat producers, it is customary to measure the nutritive value of food by a **nutritive ratio.** The nutritive ratio is the ratio of digestible protein to digestible carbohydrates and fats in a single food or mixture. Such ratios indicate relative richness in nitrogenous or body building constituents. Many things about food and diet are summed up (as averages) in the Table of Nutrients, etc., on the opposite page.

**264. Diet and Nutritive Value of Food.** — The diet that will build and sustain the body of a normal person must contain the essential food constituents in the correct proportions. Moreover, the different kinds of food to be of greatest value in a diet should be properly prepared and compatibly mixed. The kind and quantity of the foods that best meet physiological requirements vary greatly with the age, activity, and environment of persons. This subject has been carefully studied and as a result **standard dietaries** have been established. Formerly, standards were given in terms of the total nutrients in the food eaten. For example, the proper amount of food constituents needed per day by a man at moderate muscular work was given by different authorities as protein about 120 gm., fat 50–65 gm., and carbohydrate 400–531 gm. Later dietaries are stated in terms of protein and energy. The table of Results of Dietary Studies, etc., on the opposite page is instructive.

THIS PAGE IS LOCKED TO FREE MEMBERS
Purchase full membership to immediately unlock this page

Get Smart

Over 2,000 years of human knowledge in 797,885 volumes

Instant access $8.99/month

Continue

*Fair usage policy applies

The nutritive value of food is usually improved by **cooking.** If properly cooked, food is not modified so that the different nutrients fail ultimately to perform their functions in building and maintaining the body.

If we tabulate different kinds of food on the basis of the energy furnished (by the edible portion) for a given sum of money, it is seen that foods which cost much alike vary widely in their nutritive value. The accompanying table shows the number of Calories yielded by the edible portion of various foods purchasable for one dollar in each case: —

COMPARATIVE COST OF NUTRIENTS IN FOODS

| Food | Calories for $1 | Food | Calories for $1 | Food | Calories for $1 |
|---|---|---|---|---|---|
| Rolled oats (bulk) | 37,000 | Milk | 8,855 | Tomatoes (canned) | 2,625 |
| Sugar | 31,000 | Ham (smoked) | 7,600 | Halibut | 2,611 |
| Bread (white) | 22,790 | Beef (rib) | 5,550 | Oranges | 2,041 |
| Butter | 11,265 | Apples | 5,500 | Oysters | 1,533 |
| Mutton (chops) | 11,250 | Eggs | 3,735 | Strawberries | 1,400 |
| Cheese (cream) | 10,833 | Corn (canned) | 3,640 | Lobster | 400 |

## EXERCISES

**1.** What are carbohydrates? Why so called? Is the term *carbohydrate* accurate? Why? Name several carbohydrates.

**2.** Discuss the distribution of sucrose. State its properties.

**3.** Compare the properties of dextrose and levulose. How are these sugars related to sucrose? Discuss glucose. What is (*a*) grape sugar and (*b*) fruit sugar?

**4.** Why are dextrose and levulose so named? What is a test for dextrose and similar sugars?

**5.** Define and illustrate by means of sugars (*a*) hydrolysis and (*b*) fermentation.

**6.** Discuss enzymes.

**7.** How would you show that a leaf contains starch?

**8.** Review relation of oxygen and carbon to plants and animals.

**9.** Essay topics: (*a*) Dextrin. (*b*) Cellulose — its properties and derivatives. (*c*) The chemistry of bread-making. (*d*) The manufacture of paper. (*e*) Flour. (*f*) Alcohol. (*g*) Glycogen.

**10.** Discuss the manufacture of ethyl alcohol.

**11.** What is vinegar? How is it made?

**12.** What is cream of tartar? What is its function in baking powder?

**13.** State the general relations of fats to glycerin. Name several fats. What is (*a*) lard, (*b*) olive oil, (*c*) butter, (*d*) oleomargarine?

**14.** Discuss soap fully.

**15.** Apply Exercise 14 to glycerin.

**16.** What is meant by the term *protein?* State some general properties of proteins. Name the groups of proteins and illustrate each by a familiar substance.

**17.** Review respiration. What is (*a*) hemaglobin and (*b*) hematin?

**18.** Essay topics: (*a*) Nitrogen and life. (*b*) The blood.

**19.** Define the terms *food*, *nutrition*, and *nutrients*.

**20.** Name the three groups of nutrients. Give examples of each.

**21.** Give the composition of five foods.

**22.** Learn the composition and fuel value of bread, butter, and milk.

**23.** Select from the table in **258** foods rich in (*a*) protein, (*b*) carbohydrate, and (*c*) fat.

**24.** As in Exercise 23, three foods which make a well balanced combination of nutrients.

**25.** Essay topics: (*a*) Digestion. (*b*) Water and nutrition. (*c*) Enzymes and digestion. (*d*) Mineral matter in the body.

**26.** Discuss the topics: (*a*) Food is a source of energy. (*b*) The body resembles a steam engine.

**27.** State the fuel value of five kinds of food.

**28.** Assuming that one square inch represents 1000 Calories, draw diagrams of the fuel values of ten foods from the table in **262.**

**29.** Define the term *nutritive ratio*. Give several nutritive ratios. What is the nutritive ratio of bread and of milk?

## PROBLEMS

**1.** How much sodium hydroxide (95 per cent pure) is needed to make a metric ton of soap (sodium palmitate)?

**2.** Suppose 35 gm. of absolute ethyl alcohol burn to water and carbon dioxide. What volume of oxygen at 20° C. and 765 mm. is needed?

**3.** If 75 gm. of dextrose were transformed into carbon and water, how much of each would be produced?

# CHAPTER XVIII

## SULPHUR — SULPHIDES — SULPHUR OXIDES, ACIDS, AND SALTS

**265. Occurrence.** — Large quantities of free sulphur are frequently found in regions where there are active or extinct volcanoes, as in Japan, Spain, and Mexico. There are other deposits, as in Sicily, which were doubtless formed by the action of animal or vegetable matter on sulphur compounds, especially calcium sulphate.

Combined sulphur is found as sulphides and sulphates. Some important metallic sulphides are lead sulphide (galena, PbS), zinc sulphide (sphalerite or zinc blende, ZnS), mercuric sulphide (cinnabar, HgS), and copper sulphide (chalcocite, $Cu_2S$, and chalcopyrite, $CuFeS_2$). Iron sulphide (iron pyrites, $FeS_2$) is an abundant and important compound. The most abundant sulphates are calcium sulphate (gypsum, $CaSO_4.2H_2O$) and barium sulphate ($BaSO_4$). Volcanic gases often contain sulphur dioxide ($SO_2$), and hydrogen sulphide ($H_2S$) is found in the water of sulphur springs. Sulphur is a constituent of certain organic compounds present in onions, horseradish, mustard, and eggs.

**266. Source.** — Sicily, until the last few years, furnished most of the sulphur. Some is also provided by Japan, Spain, Iceland, and Mexico. Enough sulphur for domestic and some foreign uses is now readily obtained from the vast deposits in Louisiana.

THIS PAGE IS LOCKED TO FREE MEMBERS
Purchase full membership to immediately unlock this page

HISTORY

Tens of thousands of important historical sources, many previously unobtainable, are now available for the first time with a Forgotten Books Full Membership.

Unlimited Access
$8.99/month

Continue

*Fair usage policy applies

while at 800° C. and higher it contains two atoms ($S_2$). When heated, sulphur melts to a thin, amber-colored liquid. As the temperature is raised, the liquid darkens and thickens, until at about 230° C. it is black and too thick to be poured from the vessel. Heated still higher, the color remains black but the mass becomes thin, and finally at about 448° C. the liquid boils and turns into a yellowish vapor.

Sulphur combines readily and directly with many elements, thereby forming sulphides. Thus, it ignites readily in the air and burns with a pale blue flame, forming sulphur dioxide gas ($SO_2$); if burned in oxygen, a little sulphur trioxide ($SO_3$) is also formed. With metals the reaction is often accompanied with much heat and light. (See Part II, Exps. **130, 133.**)

**269. Different Modifications of Sulphur.** — Sulphur exists in several different modifications, which fall into two classes — crystallized and amorphous.

Crystallized sulphur includes the varieties that produce crystals belonging to the orthorhombic and monoclinic systems. Orthorhombic crystals of sulphur are deposited by a slowly evaporating solution of carbon disulphide (Fig. 67). Crystallized native sulphur is orthorhombic. Monoclinic crystals are deposited from slowly cooling molten sulphur. By melting sulphur in a crucible and pouring off the excess of liquid as soon as crystals shoot out from the walls near the surface, the interior of the crucible is found to be lined with long, dark yellow, shining needles (Fig. 68). They are monoclinic crystals of sulphur.

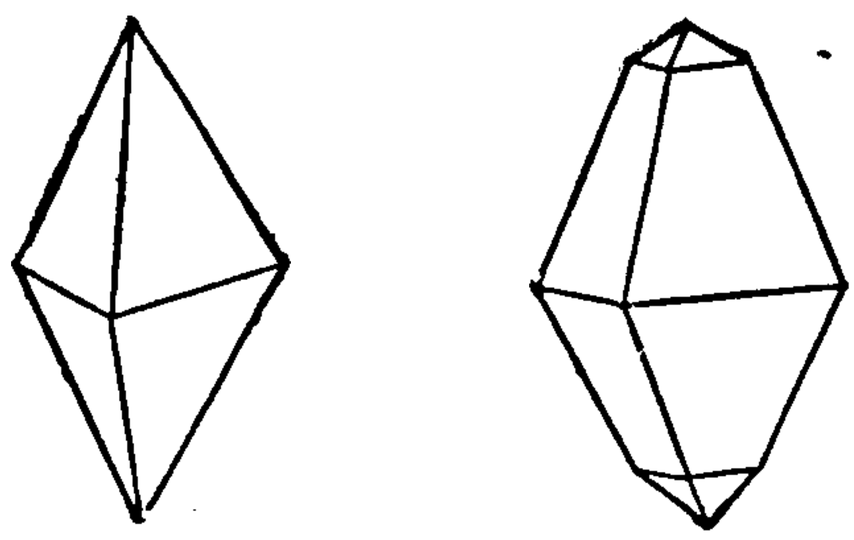

Fig. 67. — Orthorhombic Crystals of Sulphur.

Amorphous sulphur is formed by pouring boiling sulphur into cold water. It is a tough, rubberlike, amber-colored solid, which is called plastic sulphur. It is insoluble in carbon disulphide. It soon becomes hard, brittle, and yellow, and after a time changes in part into orthorhombic crystals. If these are dissolved out by carbon disulphide, a permanent amorphous form remains. (See Part II, Exps. **131, 132.**)

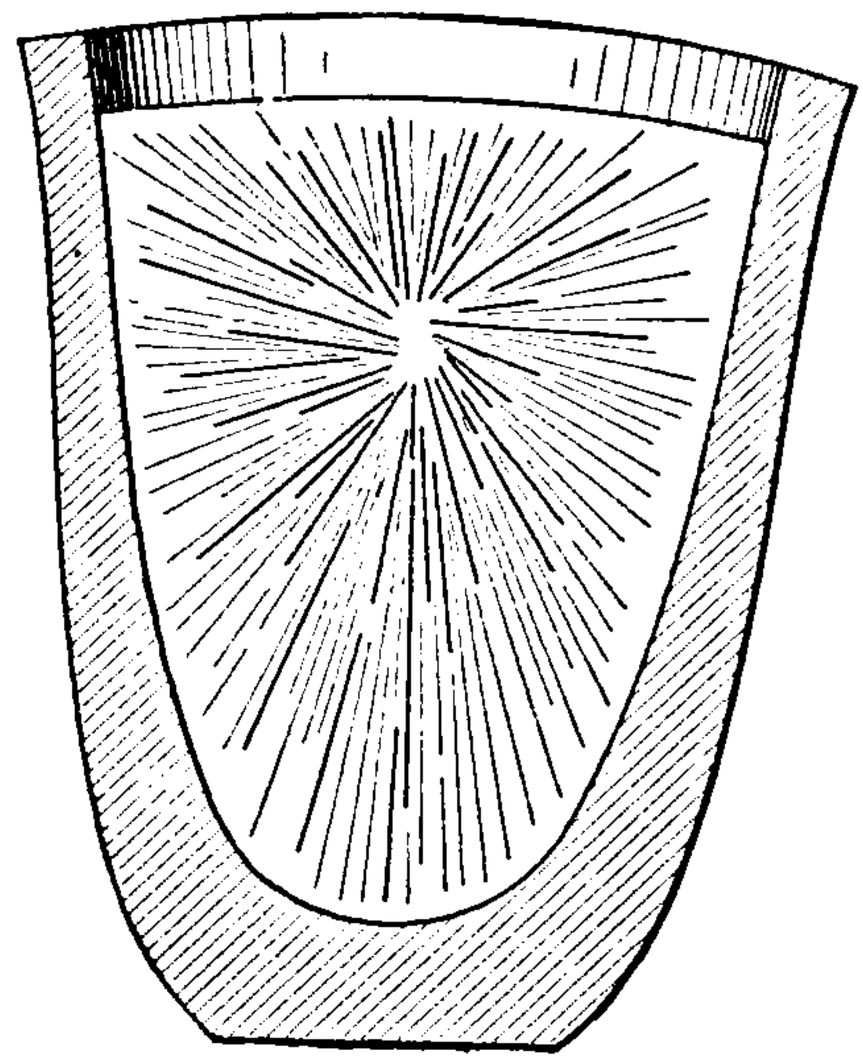

Fig. 68.—Section of a Crucible Showing Monoclinic Crystals of Sulphur.

**270. Uses.** — Large quantities of sulphur are used in making sulphuric acid and other sulphur compounds. Considerable is also used in the manufacture of gunpowder, fireworks, matches, hard and soft rubber, and mixtures for killing insect pests. These mixtures, e.g. lime-sulphur spray, contain unstable sulphur compounds, which readily decompose and liberate sulphur upon the injurious insect. Sulphur itself is also used as an insecticide, especially for killing *Phylloxera* — an insect which destroys grapevines.

## Sulphides

**271. Hydrogen Sulphide,** $H_2S$, is a gaseous compound of sulphur and hydrogen. It is sometimes called **sulphuretted hydrogen.** It occurs in the waters of sulphur springs. It is found in the air, especially near sewers and cesspools, since it is one product of the decay of animal substances, many of which contain sulphur. For example, the albumin in the white part of eggs is rich in sulphur, and when eggs decay, hydrogen sulphide is readily formed. (See Part II, Exp. **103C.**)

**272. Preparation of Hydrogen Sulphide.** — The gas is prepared in the laboratory by the interaction of dilute acids and metallic sulphides, usually by hydrochloric acid and ferrous sulphide. The equation is: —

$$\underset{\text{Iron Sulphide}}{FeS} + \underset{\text{Hydrochloric Acid}}{2HCl} = \underset{\text{Hydrogen Sulphide}}{H_2S} + \underset{\text{Iron Chloride}}{FeCl_2}$$

**273. Properties of Hydrogen Sulphide.** — Hydrogen sulphide gas is colorless and has the odor of rotten eggs. It is poisonous. A little, even if diluted with air, often produces headache and nausea, and a large quantity of the gas may prove fatal. One volume of water dissolves about three volumes of hydrogen sulphide gas at ordinary temperatures. The solution is often called **hydrogen sulphide water,** and can be used instead of the gas in many chemical experiments; it has a weak acid reaction, and hence hydrogen sulphide is sometimes called **hydrosulphuric acid.** In terms of the ionic theory the solution contains relatively few hydrogen ions. (See Part II, Exp. **138.**)

Hydrogen sulphide gas is inflammable and burns with a bluish flame, forming sulphur dioxide and water, thus: —

$$\underset{\text{Hydrogen Sulphide}}{2H_2S} + \underset{\text{Oxygen}}{3O_2} = \underset{\text{Sulphur Dioxide}}{2SO_2} + \underset{\text{Water}}{2H_2O}$$

If the supply of air is insufficient, combustion is incomplete, sulphur and water being formed, thus: —

$$\underset{\text{Hydrogen Sulphide}}{2H_2S} + \underset{\text{Oxygen}}{O_2} = \underset{\text{Sulphur}}{2S} + \underset{\text{Water}}{2H_2O}$$

Hydrogen sulphide reduces nitric acid and sulphuric acid; the equation for the latter reaction being: —

THIS PAGE IS LOCKED TO FREE MEMBERS
Purchase full membership to immediately unlock this page

Get Smart

Over 2,000 years of human knowledge in 797,885 volumes

Instant access $8.99/month

Continue

*Fair usage policy applies

is flesh colored, and antimony sulphide is orange red. The color often affords a ready means of detecting each sulphide.

## Sulphur Oxides, Acids, and Salts

**275. Sulphur Dioxide,** $SO_2$, is the usual product of the combustion of sulphur and sulphur compounds.

**276. Formation and Preparation of Sulphur Dioxide.** — When sulphur burns in air (or oxygen), sulphur dioxide is formed, thus: —

$$\underset{\text{Sulphur}}{S} + \underset{\text{Oxygen}}{O_2} = \underset{\text{Sulphur Dioxide}}{SO_2}$$

It is also formed by roasting metallic sulphides, especially iron disulphide (iron pyrites, $FeS_2$) in air, thus: —

$$\underset{\text{Iron Disulphide}}{4FeS_2} + \underset{\text{Oxygen}}{11O_2} = \underset{\text{Sulphur Dioxide}}{8SO_2} + \underset{\text{Iron Oxide}}{2Fe_2O_3}$$

Both of these reactions are utilized on a large scale in the manufacture of sulphuric acid (**284**).

**277. Preparation of Sulphur Dioxide.** — Two methods of preparation are used in the laboratory. (1) If copper and concentrated sulphuric acid are heated, a series of complex changes results finally in the evolution of sulphur dioxide. The equation may be written: —

$$\underset{\text{Copper}}{Cu} + \underset{\text{Sulphuric Acid}}{2H_2SO_4} = \underset{\text{Sulphur Dioxide}}{SO_2} + \underset{\text{Copper Sulphate}}{CuSO_4} + 2H_2O$$

(2) Dilute sulphuric (or hydrochloric) acid dropped upon a sulphite yields sulphur dioxide, thus: —

$$\underset{\text{Sodium Sulphite}}{Na_2SO_3} + \underset{\text{Sulphuric Acid}}{H_2SO_4} = \underset{\text{Sulphur Dioxide}}{SO_2} + \underset{\text{Sodium Sulphate}}{Na_2SO_4} + H_2O$$

The sulphite method is safer and more convenient, especially for liberating a steady current of the gas.

**278. Properties of Sulphur Dioxide.** — Sulphur dioxide gas has no color. Its odor is suffocating, being the well-known odor associated with burning sulphur. A liter of sulphur dioxide at 0° C. and 760 mm. weighs 2.927 gm. The gas is very soluble in water; at ordinary temperatures one volume of water dissolves about forty volumes of gas. This solution contains **sulphurous acid** (**280**). (See Part II, Exps. **134, 140.**)

Sulphur dioxide will not burn in air, nor will it support ordinary combustion. Moist sulphur dioxide bleaches organic coloring matters. A red or a purple flower loses color in it. Silk, hair, straw, wool, and other delicate substances, which would be injured by chlorine, are sometimes bleached by sulphur dioxide. Sulphur dioxide and sulphurous acid are injurious substances. In localities where considerable sulphur dioxide escapes, e.g. in factory and mining towns, trees are killed and stone buildings are slowly disintegrated; sometimes plants are killed in rooms where sulphur dioxide is formed by burning impure illuminating gas.

**279. Uses of Sulphur Dioxide.** — Large quantities of sulphur dioxide are used in the manufacture of sulphuric acid. The gas is also used as a disinfectant and preservative, in paper making, in tanning, in refining sugar, and in making acid sulphites.

**280. Sulphurous Acid.** — Sulphurous acid ($H_2SO_3$) is prepared by dissolving sulphur dioxide in water. Sulphur dioxide is, therefore, sulphurous anhydride (**187**). The simplest equation expressing this fact is: —

$$\underset{\text{Sulphur Dioxide}}{SO_2} + \underset{\text{Water}}{H_2O} = \underset{\text{Sulphurous Acid}}{H_2SO_3}$$

The acid is unstable and decomposes readily into sulphur dioxide and water; solutions of sulphurous acid smell strongly of sulphur dioxide. It is also oxidized readily; solutions of the acid, if ex-

posed to air for a short time, give a test for sulphuric acid which is formed by the combining of the sulphurous acid with oxygen from the air. Oxidizing agents, such as potassium permanganate, produce this change quickly.

**281. Sulphites.** — Sulphurous acid forms two classes of salts — the normal and acid sulphites. They yield sulphur dioxide when treated with acids. **Acid sodium sulphite** ($HNaSO_3$), often called bisulphite of soda, is the antichlor used to remove the excess of chlorine from bleached cotton cloth. It is also used in brewing, tanning, and in making starch, sugar, and paper. **Acid calcium sulphite** ($CaH_2(SO_3)_2$) is extensively used to dissolve resinous and non-fibrous matter in one process of making paper from wood (**231**).

**282. Sulphur Trioxide,** $SO_3$, is produced to a slight extent when sulphur burns in air or in oxygen and causes the white fumes often seen during the combustion. The combining of sulphur dioxide and oxygen can be hastened by passing a mixture of sulphur dioxide and oxygen (or air) over hot platinum or asbestos coated with platinum. Other substances also hasten the chemical change. The platinum, as far as we know, does not participate in this reaction. It hastens a very slow chemical reaction; its function is sometimes said to be like that of oil which assists the movement of machinery. Substances which hasten a chemical reaction but are unchanged at the end of the process are called **catalyzers** or catalytic agents. Such a chemical reaction is said to be due to **catalysis** or catalytic action.

Sulphur trioxide below 15° C. is a white crystalline solid; at 15° C. it melts and at 46° C. it boils. Another solid form, silk-like in luster and appearance, is known. When exposed to moist air, it fumes strongly, forming sulphuric acid; and when dropped into water it dissolves with a hissing sound and evolution of heat.

THIS PAGE IS LOCKED TO FREE MEMBERS
Purchase full membership to immediately unlock this page

HISTORY

Tens of thousands of important historical sources, many previously unobtainable, are now available for the first time with a Forgotten Books Full Membership.

Unlimited Access
$8.99/month

Continue

*Fair usage policy applies

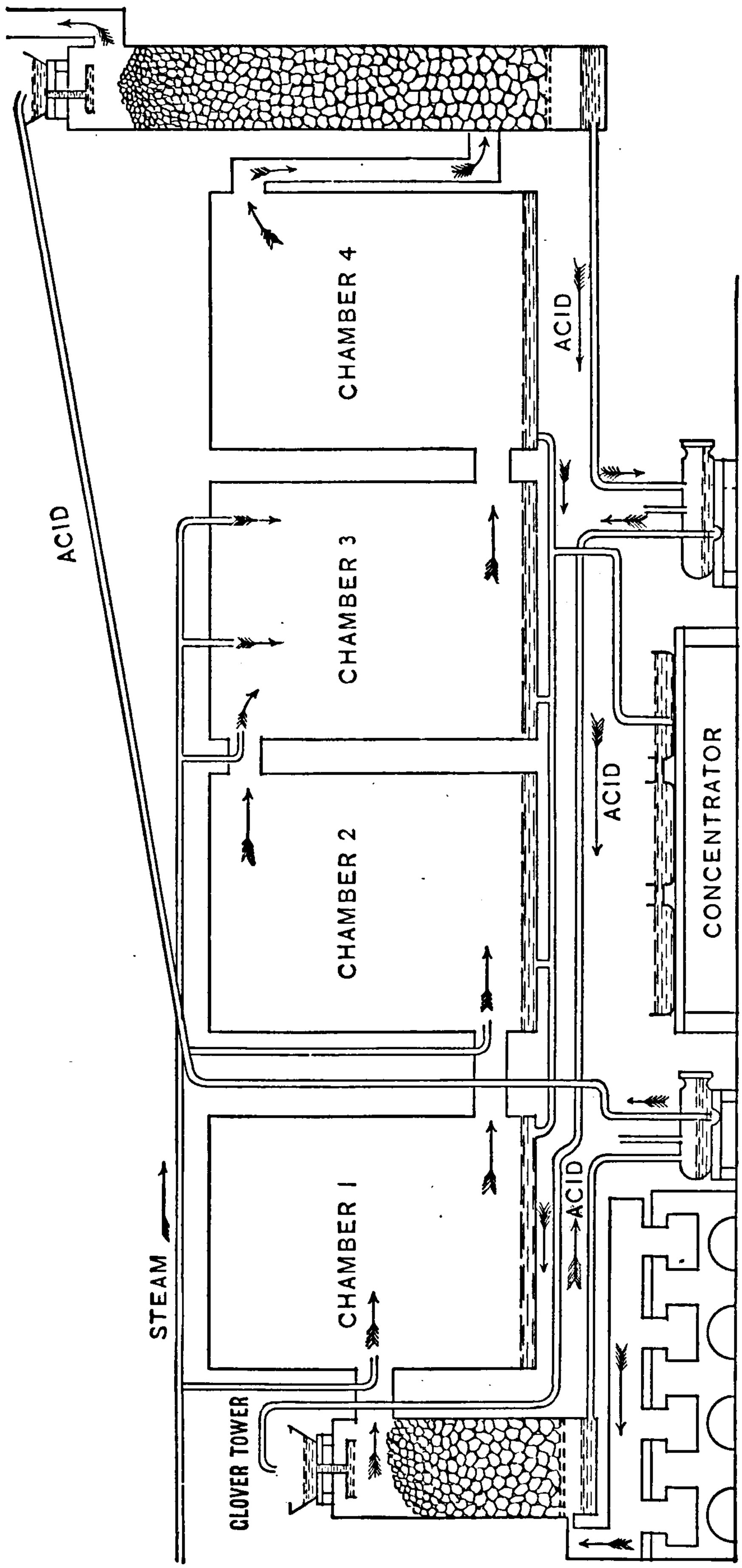


Fig. 69.—Apparatus for Chamber Process.

**285. The Construction and Operation of a Chamber Acid Plant** can be grasped by a study of Fig. 69. The plant consists of three main parts—(*a*) the furnace for producing sulphur dioxide, (*b*) the lead chambers together with the Glover and Gay-Lussac towers for changing the gases into sulphuric acid, and (*c*) the concentrating apparatus. The manufacturing operation is somewhat as follows: (1) Sulphur or iron disulphide ($FeS_2$) is burned in a furnace constructed so that enough air passes over the burning mass to change the sulphur into sulphur dioxide and to furnish the proper amount of oxygen for later changes. In some works the furnace is provided with

"niter pots" containing a mixture of sodium nitrate and sulphuric acid; the nitric acid vapors which are liberated are one source of the oxides of nitrogen. (2) The mixture of sulphur dioxide, oxides of nitrogen, and air passes from the furnace into the bottom of the Glover tower. This is a tall tower filled with small acid-resisting stones or pieces of special shaped earthenware over which flow two streams of sulphuric acid, one dilute and the other containing nitrogen dioxide (obtained from the Gay-Lussac tower acid). These acids not only cool the ascending gases, but the dilute acid is deprived of water and the Gay-Lussac tower acid of its dissolved nitrogen dioxide. Hence, concentrated acid flows out of the bottom of the Glover tower into the "strong acid" blower from which it is forced to the top of the Gay-Lussac tower for use as explained below; while from the top of the Glover tower sulphur dioxide, nitrogen dioxide, and air pass on into the first lead chamber. Here steam is introduced, and often nitric acid vapor. The main chemical changes by which the sulphuric acid is formed occur in this and the second chamber. These chambers are huge boxes often having a total capacity of 150,000 cubic feet; the walls and floors are of sheet lead supported on a wooden framework, lead being a metal which is only slightly attacked by the chamber acid. The nitrogen (from the original air) and the unused gases pass on into the bottom of the Gay-Lussac tower. This tower is filled with coke over which flows concentrated sulphuric acid (obtained from the Glover tower), which absorbs the unused nitrogen dioxide. The "nitrose" acid flows from the bottom of the Gay-Lussac tower into a blower, whence it is forced to the top of the Glover tower, where as stated above the nitrogen dioxide is liberated. At the end of the plant there is a very tall chimney, which serves as an exit for unused gases (such as nitrogen) and also maintains a draft strong enough to draw the gases through the chambers and towers. (3) The acid that is produced in the chambers and drawn off at intervals contains about 67 per cent of the compound $H_2SO_4$. For some uses, e. g. the manufacture of phosphate fertilizers, this acid needs no further treatment. Much of the acid, however, is concentrated by evaporation. It is first heated in lead-lined pans until the concentration is about 80 per cent, and finally in platinum, cast iron, or fused quartz vessels until the acid contains about 95 per cent of $H_2SO_4$.

**286. Manufacture of Sulphuric Acid by the Contact Process.** — This process consists in bringing sulphur dioxide and air, well purified and heated to about 400° C., in contact with a catalytic agent, which is usually platinum. The sulphur dioxide is thereby oxidized to sulphur trioxide, thus: —

$$\underset{\text{Sulphur Dioxide}}{2SO_2} + \underset{\text{Oxygen}}{O_2} = \underset{\text{Sulphur Trioxide}}{2SO_3}$$

The resulting sulphur trioxide is conducted into sulphuric acid containing a little water with which the sulphur trioxide combines, thus producing very concentrated sulphuric acid, which can be used unchanged or diluted to any strength, if desired. The equation for the final reaction is: —

$$\underset{\text{Sulphur Trioxide}}{SO_3} + \underset{\text{Water}}{H_2O} = \underset{\text{Sulphuric Acid}}{H_2SO_4}$$

**287. The Construction and Operation of a Contact Acid Plant** can be best understood by the sketch shown in Fig. 70. The blower A forces air into the burner B, where the sulphur dioxide is formed by burning iron pyrites ($FeS_2$) or sulphur. From the burner the gases pass into the dust chamber C, where they are freed from sulphur dust and other solid impurities; this is an important step, for dust reduces the transforming power of the catalytic agent. The gases, cooled by the pipe D, are further cleaned in the scrubbers, which contain coke wet with water (E) and with sulphuric acid (F). The next step is the removal of arsenic compounds in the purifier G. During the combustion of iron pyrites, arsenic compounds are liberated; traces of such compounds "poison" the platinum used as a catalytic agent and stop the formation of sulphur trioxide. The purified gases (mainly sulphur dioxide) then enter the mixer and heater H. Here a large excess of air is introduced from the blower and the whole mixture is heated to about 400° C. The purified and heated mixture of sul-

THIS PAGE IS LOCKED TO FREE MEMBERS
Purchase full membership to immediately unlock this page

Get Smart

Over 2,000 years of human knowledge in 797,885 volumes

Instant access $8.99/month

Continue

*Fair usage policy applies

fumes of sulphur trioxide; decomposition begins at a much lower temperature (100° – 150° C.).

When sulphuric acid is mixed with water, much heat is evolved. *The acid should always be poured into the water and the mixture should be stirred*, otherwise the intense heat may crack the vessel or spatter the hot acid. The tendency to absorb water is shown in many ways. The concentrated acid absorbs moisture from the air and from gases passed through it. It is often used in the laboratory to dry gases. Organic substances, such as wood, paper, sugar, starch, and cotton, are charred by sulphuric acid. Such compounds contain hydrogen and oxygen in the ratio to form water; these two elements are abstracted and carbon alone remains. Sulphuric acid also disintegrates the flesh, often causing serious burns, and if accidentally spilled on the hands or spattered on the face should be washed off immediately. The interaction of sulphuric acid and metals varies. With many metals, dilute sulphuric acid forms hydrogen and the corresponding metallic sulphate. Thus, hydrogen is usually prepared in the laboratory and often industrially from zinc and sulphuric acid. Concentrated acid, especially if hot, converts most metals into an oxide, which is then transformed by the acid into the corresponding sulphate. Thus, the equations expressing the reactions with copper are: —

$$\underset{\text{Copper}}{Cu} + \underset{\text{Sulphuric Acid}}{H_2SO_4} = \underset{\text{Copper Oxide}}{CuO} + \underset{\text{Sulphur Dioxide}}{SO_2} + \underset{\text{Water}}{H_2O}$$

$$\underset{\text{Copper Oxide}}{CuO} + \underset{\text{Sulphuric Acid}}{H_2SO_4} = \underset{\text{Copper Sulphate}}{CuSO_4} + \underset{\text{Water}}{H_2O}$$

Iron is the only common metal that is not readily attacked by the concentrated acid, and advantage is taken of this

property in transporting acid in bulk in iron tank cars. Sulphuric acid unites with ammonia ($NH_3$) to form ammonium sulphate ($(NH_4)_2SO_4$). By interaction with salts the corresponding acid is readily liberated if the acid boils at a lower point than sulphuric acid; this reaction is widely used to prepare hydrogen chloride from chlorides and nitric acid from nitrates. Dilute solutions of sulphuric acid contain an abundance of hydrogen ions ($H^+$) and sulphate ions ($SO_4^{--}$). (See Part II, Exp. **135.**)

The uses of sulphuric acid are numerous. It is one of the most important substances. Directly or indirectly it is used in hundreds of industries upon which the comfort, prosperity, and progress of mankind depend. It is used in the manufacture of many acids. It is essential in one process for the manufacture of sodium carbonate, which has many uses. Enormous quantities are consumed in making fertilizers, alum and other sulphates, nitroglycerin, glucose, dyestuffs, and in various parts of such fundamental industries as dyeing, bleaching, metal cleaning, refining, and metallurgy.

**289. Sulphates.** — Sulphuric acid is dibasic and forms two classes of salts, — the normal **sulphates,** such as sodium sulphate, $Na_2SO_4$, and the **acid sulphates,** such as acid sodium sulphate, $HNaSO_4$. Most sulphates are soluble in water, only the sulphates of barium, strontium, and lead being insoluble, while calcium sulphate is slightly soluble. Important sulphates are calcium sulphate (gypsum, $CaSO_4.2H_2O$), barium sulphate (barite, barytes, heavy spar, $BaSO_4$), zinc sulphate ($ZnSO_4$, and white vitriol, $ZnSO_4.7H_2O$), copper sulphate ($CuSO_4$, and blue vitriol or blue stone, $CuSO_4.5H_2O$), iron sulphate ($FeSO_4$, and green vitriol, copperas, or ferrous sulphate, $FeSO_4.7H_2O$), sodium sulphate ($Na_2SO_4$, and Glauber's salt,

$Na_2SO_4.10H_2O$), and magnesium sulphate ($MgSO_4$, and Epsom salts, $MgSO_4.7H_2O$). Sulphates are used in many industries.

**290. The test for sulphuric acid** or a soluble sulphate is the formation of the white, insoluble barium sulphate upon the addition of barium chloride solution. Both solutions contain $SO_4$-ions which unite with Ba-ions to form insoluble barium sulphate. The ionic equation for the reaction is: —

$$Ba^{++} + SO_4^{--} \rightarrow BaSO_4$$

An insoluble sulphate fused on charcoal is reduced to a sulphide, which blackens a moist silver coin, owing to the formation of silver sulphide ($Ag_2S$).

**291. Fuming Sulphuric Acid,** $H_2S_2O_2$, is made by adding sulphur trioxide to sulphuric acid. This is the acid called sulphuric acid by the alchemists, who made it by heating moist ferrous sulphate. It is sometimes called Nordhausen sulphuric acid. It is a thick, brown liquid, which fumes strongly in the air, owing to the escape of oxides of sulphur. It is used in gas analysis to absorb ethylene and other illuminants, and in dyeing to dissolve indigo. If the fuming acid is cooled to 0° C., crystals separate; they are called **pyrosulphuric acid.**

**292. Sodium Thiosulphate,** $Na_2S_2O_3$, is a salt of an unstable acid. It is sometimes incorrectly called sodium hyposulphite, or simply "hypo." It is a white, crystalline solid, very soluble in water. The solution, used in excess, dissolves certain compounds of silver, i.e. AgCl, AgBr, AgI, hence its extensive use in photography.

**293. Carbon Disulphide** (or Bisulphide), $CS_2$, when pure, is a clear, colorless liquid, with an agreeable odor, but the commercial substance is yellow and has an exceedingly offensive odor. It is poisonous. It is volatile and inflammable, the equation for its combustion being: —

| $CS_2$ | + | $3O_2$ | = | $CO_2$ | + | $2SO_2$ |
|---|---|---|---|---|---|---|
| Carbon Disulphide | | Oxygen | | Carbon Dioxide | | Sulphur Dioxide |

THIS PAGE IS LOCKED TO FREE MEMBERS
Purchase full membership to immediately unlock this page

HISTORY

Tens of thousands of important historical sources, many previously unobtainable, are now available for the first time with a Forgotten Books Full Membership.

Unlimited Access
$8.99/month

Continue

*Fair usage policy applies

**3.** Describe the lead chamber process of manufacturing sulphuric acid.

**4.** Starting with sulphur, how would you prepare successively sulphur dioxide, sulphur trioxide, sulphuric acid, hydrogen sulphide, and sulphur?

**5.** Describe the contact process of manufacturing sulphuric acid.

**6.** Enumerate the important uses of sulphuric acid.

**7.** What is (*a*) gypsum, (*b*) white vitriol, (*c*) green vitriol, (*d*) blue vitriol, (*e*) Glauber's salt, (*f*) oil of vitriol?

**8.** State the test for (*a*) sulphuric acid, (*b*) sulphurous acid, (*c*) a soluble sulphate, (*d*) an insoluble sulphate, (*e*) a sulphite, (*f*) hydrogen sulphide.

**9.** Essay topics: (*a*) Sicilian sulphur industry. (*b*) Louisiana sulphur industry. (*c*) Uses of sulphur. (*d*) Uses of sulphuric acid.

**10.** Explain the following: (*a*) Bottles of concentrated sulphuric acid sometimes have a white deposit inside the bottle and a black one outside. (*b*) Bottles of hydrogen sulphide water upon standing lose the bad odor, become cloudy, and have a white layer on the bottom. (*c*) Dishes of concentrated sulphuric acid are often left inside the case of a chemical balance. (*d*) A rubber band blackens a silver coin.

## PROBLEMS

**1.** What is the approximate weight of sulphur in a bin 200 feet long, 80 feet wide, and 90 feet high? (Note. — A cubic foot of water weighs approximately 62 pounds.)

**2.** Calculate the weight of sulphur in (*a*) a metric ton of pure $FeS_2$, (*b*) a kilogram of $CS_2$, (*c*) 720 gm. of $MgSO_4$, (*d*) 2000 lb. of $CaSO_4$.

**3.** Calculate the weight of sulphur in (*a*) 77 gm. of $H_2S$, (*b*) 77 l. of $H_2S$ at 0° C. and 760 mm., (*c*) 77 l. of $H_2S$ at 20° C. and 755 mm.

**4.** Hydrochloric acid solution having the specific gravity of 1.2 contains 39.86 per cent of HCl (by weight). What (*a*) weight and (*b*) volume of hydrogen sulphide (at standard conditions) will be produced by the interaction of ferrous sulphide and 2 l. of this acid?

**5.** Write the equation for the interaction of sodium sulphite and sulphuric acid. What weight and what volume (standard conditions) of sulphur dioxide can be prepared from 25 gm. of sodium sulphite (92 per cent pure)?

**6.** In Problem 5 what volume of sulphuric acid solution is needed, if the acid used has the specific gravity 1.45 and contains 55.07 per cent of $H_2SO_4$ by weight?

**7.** An oxide of sulphur contains 50 per cent of each element. If the atomic weights of oxygen and sulphur are respectively 16 and 32, what is the molecular formula of the compound?

**8.** A flask filled with water was found to weigh 72 grams, the flask alone weighing 22 grams. The same flask filled with sulphuric acid weighed 114 grams. Calculate the specific gravity of the sulphuric acid.

# CHAPTER XIX

## BORON — BORAX — BORIC ACID

**294. Occurrence, Preparation, and Properties of Boron.** — The non-metallic element boron (B) is never found free. Some of its compounds are abundant, e.g. borax ($Na_2B_4O_7$), boric acid ($H_3BO_3$), and colemanite ($Ca_2B_6O_{11}.5H_2O$).

Pure boron is prepared by heating boron chloride and hydrogen to a very high temperature. The equation is: —

$$\underset{\text{Boron Chloride}}{2BiCl_3} + \underset{\text{Hydrogen}}{3H_2} = \underset{\text{Boron}}{2B} + \underset{\text{Hydrogen Chloride}}{6HCl}$$

Pure boron is a dark gray non-crystalline solid. It is very hard, almost as hard as diamond. The melting point is over 2000° C. Boron and oxygen unite readily, forming the stable compound boric oxide ($B_2O_3$). A substance called "boron sub-oxide" is obtained by partial reduction of boric oxide and is used in the production of copper castings free from the holes that are often caused by oxygen and other gases.

**295. Borax,** $Na_2B_4O_7$, occurs in large quantities in California. Most of the commercial borax is made from calcium borate (colemanite, $Ca_2B_6O_{11}.5H_2O$) by boiling it with sodium carbonate and separating the borax by crystallization. The equation for the reaction is: —

$$\underset{\text{Calcium Borate}}{2Ca_2B_5O_{11}} + \underset{\text{Sodium Carbonate}}{4Na_2CO_3} + \underset{\text{Water}}{H_2O} = \underset{\text{Borax}}{3Na_2B_4O_7} + \underset{\text{Calcium Carbonate}}{4CaCO_3} + \underset{\text{Sodium Hydroxide}}{2NaOH}$$

Borax is a white crystallized solid, having five or ten molecules of water of crystallization; the usual commercial form is the powdered crystals. The crystals readily effloresce and crumble in the air. When heated, crystal-

lized borax loses its water of crystallization and swells into a white porous mass which finally melts into a glass-like solid. This glassy borax dissolves metallic oxides and is colored by them. If the borax is melted on the end of a looped wire, the transparent globule is called a borax bead. These beads usually assume different colors after being heated, in an oxidizing or a reducing flame, and the colors are characteristic of the metals. Thus, a copper bead is made blue-green by an oxidizing flame and red by a reducing flame. (See Part II, Exps. **142–144.**)

Borax has various uses. Its chief use is in the manufacture of enamels for coating iron ware. The so-called "granite" or "agate" ware and "porcelain-lined" vessels are made of iron coated with an easily fused glass called enamel. Some is used for preserving meat, fish, cheese, and other foods, because it prevents the growth of certain bacteria which produce decay. A solution of borax has an alkaline reaction; hence it is sometimes used instead of soap as a cleansing agent. Some soaps contain borax. In laundries borax is used to soften hard water and to improve the finish of ironed goods. Its power to dissolve oxides adapts borax for use in soldering and welding metals. Solder adheres only to clean metals, so a little borax is used to dissolve the film of oxide on the surfaces to be joined. Considerable is consumed as an ingredient of ointments, lotions, and toilet powders.

**296. Boric Acid** (or boracic acid), $H_3BO_3$, is contained in the waters and steam of certain hot springs, especially in Italy. The acid is also prepared by the interaction of sulphuric acid and borax. The equation for the reaction is: —

$$\underset{\text{Sulphuric Acid}}{H_2SO_4} + \underset{\text{Borax}}{Na_2B_4O_7} + \underset{\text{Water}}{5H_2O} = \underset{\text{Boric Acid}}{4H_3BO_3} + \underset{\text{Sodium Sulphate}}{Na_2SO_4}$$

THIS PAGE IS LOCKED TO FREE MEMBERS
Purchase full membership to immediately unlock this page

Get Smart

Over 2,000 years of human knowledge in 797,885 volumes

Instant access $8.99/month

Continue

*Fair usage policy applies

# CHAPTER XX

## SILICON — SILICON DIOXIDE — SILICIC ACID AND SILICATES — GLASS

**297. Occurrence.** — The element silicon (Si) does not occur free in nature, but some of its compounds are very abundant, especially silicon dioxide ($SiO_2$) and silicates. Sand is silicon dioxide and many rocks are made up of silicates. Silicon comes next to oxygen in abundance, about one fourth of the earth's crust being silicon.

**298. Preparation.** — Silicon is prepared on a commercial scale by heating a mixture of silicon dioxide (i.e. sand) and carbon (in the form of coke) in an electric furnace. The equation for the reaction is: —

$$\underset{\text{Silicon Dioxide}}{SiO_2} + \underset{\text{Carbon}}{2C} = \underset{\text{Silicon}}{Si} + \underset{\text{Carbon Monoxide}}{2CO}$$

**299. Properties.** — Thus prepared, silicon is a brittle, gray-black, lustrous, metallic looking solid. It melts at about 1400 ° C. The specific gravity is about 2.37. It is hard enough to produce scratches on glass, being almost as hard as quartz.

Silicon at high temperatures combines with oxygen, though not readily, to form silicon dioxide ($SiO_2$); with other elements it forms compounds often called silicides, e.g. carbon silicide (CSi). Chlorine and elements related to it, especially fluorine, combine with silicon to form volatile compounds. Sodium hydroxide and potassium hydroxide interact with silicon, thus: —

$$4NaOH + Si = Na_4SiO_4 + 2H_2$$

Sodium Hydroxide — Silicon — Sodium Silicate — Hydrogen

Water containing alkaline substances, such as sodium carbonate, acts slowly upon silicon in much the same way. Most acids produce little or no effect upon silicon, hydrofluoric acid being the main exception. (See Part II, Exp. **146.**)

**300. Uses.** — Silicon is made into vessels and parts of apparatus designed to withstand the action of acids and other liquids. Some is used to improve castings by removing the gases that cause small holes.

**301. Silicon Dioxide or Silica,** $SiO_2$, is the most common and important compound of silicon. Sand, gravel, sandstone, quartzite, and the numerous varieties of quartz are almost wholly silicon dioxide; many rocks, e.g. granite and gneiss, contain silica as an essential ingredient. Opal is a variety of silica containing varying per cents of combined water. Petrified or silicified wood is the remnant of wood in which the fiber has been replaced by silica. There is a petrified forest in Arizona. Infusorial or diatomaceous earth is largely silica and consists of the shells of minute organisms called diatoms, many being of delicate and beautiful structure (Fig. 72).

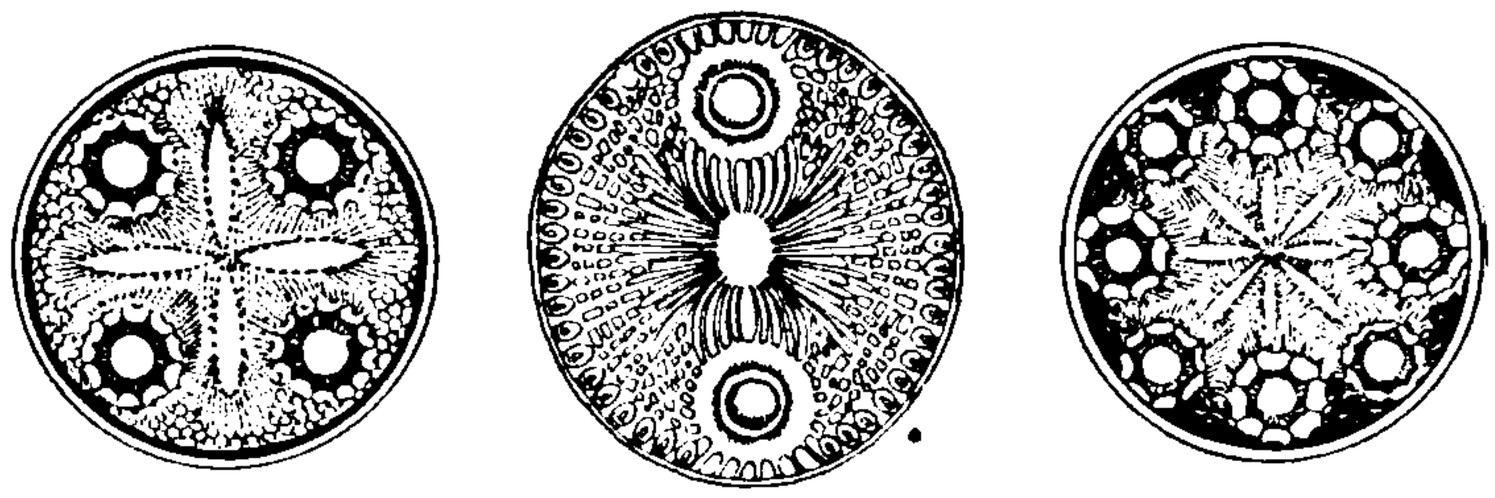

Fig. 72. — Diatom Shells (Enlarged).

**302.** Quartz is the commonest form of silicon dioxide. Pure quartz is colorless and transparent, and is called rock crystal. It is crystalline and is frequently found as single crystals which consist usually of a six-sided prism with a six-sided pyramid at one or both ends; the crystals

are sometimes distorted or complex (Fig. 73). There are many varieties of quartz which differ in color and structure. Among the crystalline varieties are the clear, colorless rock crystal, the purple amethyst, and the rose, yellow, glassy, milky, and smoky forms. Varieties imperfectly crystalline are the waxlike chalcedony, the various forms of agate having different colored layers, the reddish brown carnelian, the black and white onyx, the red or brown jasper, the brown or black flint.

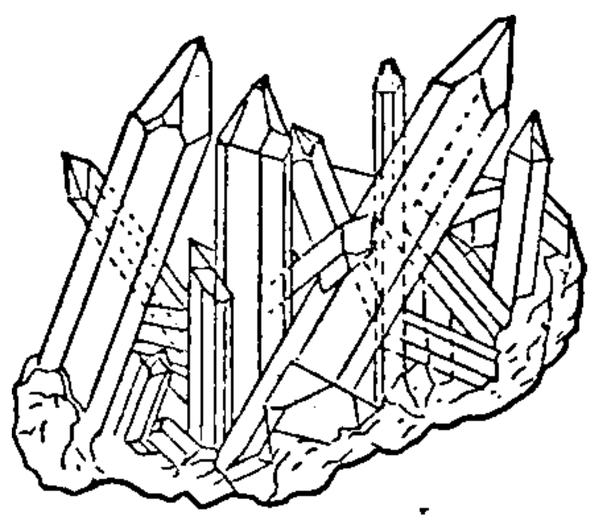

Fig. 73. — Quartz Crystals.

**303. Properties of Silicon Dioxide.** — Quartz and most crystalline varieties of silica are harder than other common substances. The specific gravity of quartz is 2.66. Quartz and other varieties of silica are infusible, except in the oxyhydrogen flame and the electric furnace. If pure silica is fused with certain precautions, the viscous mass can be drawn into elastic threads, which are used to suspend delicate parts of electrical instruments; it can also be shaped into tubes, flasks, crucibles, etc., which do not crack when heated to a high temperature and then suddenly cooled.

The different forms of silicon dioxide do not dissolve in water. They resist the action of acids, except hydrofluoric acid, which transforms them into a volatile fluoride (silicon tetrafluoride, $SiF_4$). They are converted into soluble silicates when heated in water containing alkaline substances or when fused with the hydroxides or carbonates of sodium and potassium. Thus, when fine sand is fused with sodium carbonate the equation for the reaction is: —

$$\underset{\text{Silicon Dioxide}}{SiO_2} + \underset{\text{Sodium Carbonate}}{Na_2CO_3} = \underset{\text{Sodium Silicate}}{Na_2SiO_3} + \underset{\text{Carbon Dioxide}}{CO_2}$$

THIS PAGE IS LOCKED TO FREE MEMBERS
Purchase full membership to immediately unlock this page

HISTORY

Tens of thousands of important historical sources, many previously unobtainable, are now available for the first time with a Forgotten Books Full Membership.

Unlimited Access
$8.99/month

Continue

*Fair usage policy applies

jelly-like precipitate called **silicic acid** is formed. The equation usually given for the reaction is: —

$$\underset{\text{Sodium Silicate}}{Na_2SiO_3} + \underset{\text{Hydrochloric Acid}}{2HCl} + \underset{\text{Silicic Acid}}{H_2SiO_3} + \underset{\text{Sodium Chloride}}{2NaCl}$$

Probably other salts of silicon are formed by fusing silicon dioxide with such substances as the hydroxides and carbonates of sodium and potassium, and when the solution is treated with acids like hydrochloric acid the precipitate is a mixture of meta- and orthosilicic acids ($H_2SiO_3$ and $H_4SiO_4$). There are several silicic acids, though they have not been prepared in the pure state. Their salts, however, are well known; indeed, the **silicates** are among the commonest substances in the earth's crust. Many minerals and rocks consist wholly or largely of silicates of the metals aluminium, iron, calcium, potassium, sodium, and magnesium. Some common silicates are feldspar, mica, hornblende, clay, beryl, garnet, serpentine, and talc; the lava which is ejected by volcanoes consists largely of fused silicates from the interior of the earth.

The simplest **silicic acids** are metasilicic acid ($H_2SiO_3$) and orthosilicic acid ($H_4SiO_4$). The ortho-acid passes into the meta-acid upon drying, thus: —

$$\underset{\text{Orthosilicic Acid}}{H_4SiO_4} = \underset{\text{Metasilicic Acid}}{H_2SiO_3} + \underset{\text{Water}}{H_2O}$$

And the metasilicic acid when heated decomposes into silicon dioxide and water, thus: —

$$\underset{\text{Metasilicic Acid}}{H_2SiO_3} = \underset{\text{Silicon Dioxide}}{SiO_2} + \underset{\text{Water}}{H_2O}$$

These two silicic acids are closely related to each other and to silicon dioxide, which may be regarded as their anhydride, though the acid cannot be formed by dis-

solving silica in water. Other silicic acids are complex, and, although they have not been isolated, they may be conveniently thought of as one or more molecules of orthosilicic acid minus one or more molecules of water. Thus, we might have the following hypothetical silicic acids: —

$$2H_4SiO_4 - H_2O = H_6Si_2O_7, \text{ or Disilicic Acid}$$
$$3H_4SiO_4 - 4H_2O = H_4Si_3O_8, \text{ or Trisilicic Acid}$$

Many of the silicates in the earth are salts of these polysilicic acids, as they are often called. For example, serpentine ($Mg_3Si_2O_8$) is a salt of disilicic acid ($H_6Si_2O_7$), and orthoclase ($KAlSi_3O_8$) of trisilicic acid ($H_4Si_3O_8$). Illustrations of the simpler silicates are the metasilicate wollastonite ($CaSiO_3$) and the orthosilicate zircon ($ZrSiO_4$).

Sodium and potassium silicates are the only salts readily soluble in water, and the thick, sirupy solution is often called **water glass** or soluble glass, because it hardens to a glassy solid when exposed to air. The solution is used in making yellow soaps, cements, and artificial stone, to fix colors in frescoing and calico printing, and to render cloth, wood, and paper fireproof. Considerable is used to preserve eggs; the eggs are put in a vessel and covered with the solution, which keeps the air from penetrating the shell and thus prevents decomposition. (See Part II, Exp. **148.**)

Naturally occurring silicates are called insoluble; nevertheless they dissolve very slowly, especially through the joint action of carbon dioxide and water. Even the moist carbon dioxide in the air slowly decomposes silicates, and as a result of this gradual but very extensive chemical change, hard rocks like granite disintegrate, the more soluble products being washed away and the less soluble

ones being left behind as clay, sand, etc. This transformation, which is called **weathering,** is assisted by the action of water, especially alternate freezing and thawing as well as dissolving.

The decomposition of silicates by the joint action of carbon dioxide and water (i.e. by carbonic acid ($H_2CO_3$)) is due to the fact that silicic acid is a weak acid. This property is strikingly shown by the formation of basins and terraces of silica in Yellowstone Park. The hot waters of some of the springs in the Park contain dissolved alkaline silicates (e.g. $Na_4SiO_4$) which are transformed to silicic acid by the carbon dioxide of the air; the silicic acid which is left where the waters overflow gradually loses water and builds up a deposit of silica, often very beautiful. Silica thus deposited is called geyserite or siliceous sinter.

**307. Colloidal Silicic Acid.** — Sodium silicate and hydrochloric acid do not always interact as described above (**306**). If the sodium silicate solution is dilute, or the hydrochloric acid is concentrated or in excess, or the mixing is done quickly, then the silicic acid which is formed remains in solution. This solution, however, is not a solution of the gelatinous silicic acid described above, for the latter is insoluble in water. Moreover, if this solution is evaporated, the silicic acid separates as a gelatinous mass which will not redissolve upon addition of water. The silicic acid in the solution is in the **colloidal state** or in colloidal solution. It cannot be filtered out by passing the liquid through paper in the usual way.

Many substances, e.g. glue, starch, gelatin, albumin, form colloidal solutions. In our bodies colloidal solutions play an important part in vital processes. Colloidal solutions in all probability are really not solutions at all, but liquids in which the colloid is suspended as very fine particles, too fine to be retained by filter paper. This view is substantiated by the fact that a beam of light when passed through a colloidal solution is made bright by the particles just as it is by the dust in a room.

THIS PAGE IS LOCKED TO FREE MEMBERS
Purchase full membership to immediately unlock this page

Get Smart

Over 2,000 years of human knowledge in 797,885 volumes

Instant access $8.99/month

Continue

*Fair usage policy applies

TABLE OF PROPORTIONS OF INGREDIENTS FOR GLASS

| Ingredient | Plate glass | Window glass | Green bottle glass | Lead glass |
|---|---|---|---|---|
| Sand ($SiO_2$) | 100 | 100 | 100 | 100 |
| Sodium sulphate ($Na_2SO_4$) | | 42 | 38 | |
| Sodium carbonate ($Na_2CO_3$) | 36 | | | |
| Limestone ($CaCO_3$) | 24 | 40 | 34 | |
| Carbon (C) | .75 | 6 | 5 | |
| Arsenic trioxide ($As_2O_3$) | 1 | 2 | | .15 |
| Potassium carbonate ($K_2CO_3$) | | | | 34 |
| Red Lead ($Pb_3O_4$) | | | | 48 |
| Sodium nitrate ($NaNO_3$) | | | | 6 |
| Manganese dioxide ($MnO_2$) | | | | .06 |
| Antimony (Sb) | | | | .02 |

gredients in a fire-clay pot. There are four main kinds of glass and many varieties of each. In the order of their fusibility and beginning with the softest, the four kinds are: (1) Sodium-lead glass, (2) potassium-lead glass, (3) sodium-calcium glass, and (4) potassium-calcium glass. Glass made from a lead compound is often called flint glass; it is lustrous, refracts light to a high degree, and is made into lenses for optical instruments and into shades for electric and gas lights. Cut glass is a lead glass. Window, plate, crown, table, and bottle glass are varieties of sodium-calcium glass. This kind of glass softens when heated and the flame becomes yellow from the sodium, hence it is often called soft glass or soda glass. Glass tubing and much chemical glassware is sodium-calcium glass. Bohemian or hard glass is a potassium-calcium glass, and is used in making chemical apparatus designed to withstand great heat. Soft glass is slightly soluble in water, but hard glass is less so, hence

special varieties of hard glass are often made into apparatus which resists the solvent action of water and chemical reagents. Jena glass is one variety of hard glass. (See Part II, Exp. **151**.)

In making glass objects the molten glass is manipulated in various ways. Bottles, for example, are made by gathering a mass of the plastic glass on the end of a long tube, called a glass blowpipe, blowing the glass into a preliminary shape, then lowering it into a mold and blowing until the glass fills the mold, and finally opening the mold and lifting out the bottle; by subsequent operations the neck of the bottle is shaped and finished. Lamp chimneys are made by blowing the lump of glass into the desired shape and simultaneously swinging and twisting the plastic mass; no mold is used and considerable skill is necessary to produce the proper shape. Window glass is made by blowing a lump of glass into a hollow globe and then into a cylinder; this, on being opened at both ends and cut lengthwise, spreads out flat. Plate glass is made by pouring the molten glass upon a large table, rolling it with a hot iron roller, and subsequently grinding and polishing it until the surfaces are parallel. Some cheap articles are made by pressing plastic glass with a die and certain kinds of inexpensive hollow ware are blown into shape by machinery.

Glass must be cooled slowly to prevent brittleness. This operation is called **annealing,** and is accomplished by passing the objects slowly through a furnace in which the temperature is gradually lowered.

Glass is colored by adding different substances to the molten mass. Iron, chromium, and certain copper compounds make it green, the green color of many bottles and fruit jars being due to iron compounds in the original materials; selenium produces a red color, and selenium glass is now used in red signal lanterns; white glass is made by adding fluor spar, cryolite, or calcium phosphate; stained glass is ordinary glass to which fusible pigments are applied with a brush and then fixed by heat.

## EXERCISES

**1.** In what compounds is silicon found in nature? What proportion of the earth's crust is combined silicon? Compare the abundance of silicon with that of other elements.

**2.** Describe the different varieties of quartz. Summarize the properties of quartz. How can it be readily distinguished from other minerals and from rocks?

**3.** Discuss the cycle of silicon dioxide in nature.

**4.** Name several minerals and rocks which are silicates.

**5.** Describe the formation, state the uses, and enumerate the properties of water glass.

**6.** Starting with silicon, how would you prepare successively silicon dioxide, sodium silicate, silicic acid, silicon dioxide, silicon?

**7.** Essay topics: (*a*) Diatoms, their formation, deposition, and uses. (*b*) Manufacture of glass. (*c*) Quartz. (*d*) Silicon dioxide as an abrasive.

## PROBLEMS

**1.** Calculate the per cent of silicon in (*a*) orthosilicic acid, (*b*) metasilicic acid, (*c*) potassium feldspar, $KAlSi_3O_8$, (*d*) sodium feldspar, $NaAlSi_3O_8$.

**2.** (*a*) How much sodium silicate can be made from a metric ton of sand (85 per cent pure)? (*b*) How much potassium silicate?

**3.** Write the formula of (*a*) silicon chloride, (*b*) silicon bromide, (*c*) cupric silicide, (*d*) cuprous silicide, (*e*) sodium metasilicate, (*f*) sodium orthosilicate, (*g*) magnesium metasilicate, (*h*) magnesium orthosilicate, (*i*) aluminium metasilicate, (*j*) ferrous orthosilicate. Calculate the per cent of silicon in any three of these compounds.

**4.** Scheele found that .6738 gm. of silicon tetrachloride gave 2.277 gm. of silver chloride. Calculate the atomic weight of silicon. (Equation is $SiCl_4 + 4AgNO_3 + 2H_2O = SiO_2 + 4AgCl + 4HNO_3$.)

THIS PAGE IS LOCKED TO FREE MEMBERS
Purchase full membership to immediately unlock this page

HISTORY

Tens of thousands of important historical sources, many previously unobtainable, are now available for the first time with a Forgotten Books Full Membership.

Unlimited Access
$8.99/month

Continue

*Fair usage policy applies

TABLE OF IMPORTANT METALS AND NON-METALS

| Metals | | | Non-Metals | |
|---|---|---|---|---|
| Sodium | Magnesium | | Hydrogen | Oxygen |
| Potassium | Zinc | Chromium | — | Sulphur |
| — | Cadmium | — | Boron | — |
| Copper | Mercury | Manganese | — | Fluorine |
| Silver | — | — | Carbon | Chlorine |
| Gold | Aluminium | Iron | Silicon | Bromine |
| — | — | Cobalt | — | Iodine |
| Calcium | Tin | Nickel | Nitrogen | |
| Strontium | Lead | — | Phosphorus | |
| Barium | Antimony | Platinum | Arsenic | |
| | Bismuth | | | |

## Periodic Classification

**313. Periodic Classification.** — In 1869 the Russian chemist Mendelejeff published the **periodic classification** of the elements. It is based on a relation between the properties of all the elements and their atomic weights. The scheme of the classification is substantially as follows: If the elements beginning with helium are arranged in the order of their increasing atomic weights, a series results in which similar or closely related elements occur at regular intervals. That is, the series breaks up naturally into several periods, and hence the system of classification is called periodic. If the series is divided into these periods and the periods are placed below each other, a table is obtained in which the elements can be viewed in three ways: first as a long consecutive series, second as groups, and third as periods. The groups are in the vertical columns and are designated by the numerals O to VIII; the groups (except Group O) are subdivided into families. The periods are in horizontal rows and are numbered from 1 to 12. Such a table is shown on page 261.

## Periodic Classification of the Elements

| Periods | Group O | Group I | Group II | Group III | Group IV | Group V | Group VI | Group VII | Group VIII |
|---|---|---|---|---|---|---|---|---|---|
| 1 | | Hydrogen H = 1.008 | | | | | | | |
| 2 | Helium He = 3.99 | Lithium Li = 6.94 | Beryllium Be = 9.1 | Boron B = 11.0 | Carbon C = 12.00 | Nitrogen N = 14.01 | Oxygen O = 16.00 | Fluorine F = 19.0 | — |
| 3 | Neon Ne = 20.2 | Sodium Na = 23.00 | Magnesium Mg = 24.32 | Aluminium Al = 27.1 | Silicon Si = 28.3 | Phosphorus P = 31.04 | Sulphur S = 32.07 | Chlorine Cl = 35.46 | — |
| 4 | Argon A = 39.88 | Potassium K = 39.10 | Calcium Ca = 40.07 | Scandium Sc = 44.1 | Titanium Ti = 48.1 | Vanadium V = 51.0 | Chromium Cr = 52.0 | Manganese Mn = 54.93 | Iron Fe = 55.84<br>Cobalt Co = 58.97<br>Nickel Ni = 58.68 |
| 5 | — | Copper Cu = 63.57 | Zinc Zn = 65.37 | Gallium Ga = 69.9 | Germanium Ge = 72.5 | Arsenic As = 74.96 | Selenium Se = 79.2 | Bromine Br = 79.92 | — |
| 6 | Krypton Kr = 82.92 | Rubidium Rb = 85.45 | Strontium Sr = 87.63 | Yttrium Y = 89.0 | Zirconium Zr = 90.6 | Columbium Cb = 93.5 | Molybdenum Mo = 96.0 | — | Ruthenium Ru = 101.7<br>Rhodium Rh = 102.9<br>Palladium Pd = 106.7 |
| 7 | — | Silver Ag = 107.88 | Cadmium Cd = 112.40 | Indium In = 114.8 | Tin Sn = 119.0 | Antimony Sb = 120.2 | Tellurium Te = 127.5 | Iodine I = 126.92 | — |
| 8 | Xenon Xe = 130.2 | Cæsium Cs = 132.81 | Barium Ba = 137.37 | Lanthanum La = 139.0 | Cerium Ce = 140.25 | — | — | — | — |
| 9 | — | — | — | — | — | — | — | — | — |
| 10 | — | — | — | Ytterbium Yb = 172.0 | — | Tantalum Ta = 181.5 | Tungsten W = 184.0 | — | Osmium Os = 190.9<br>Iridium Ir = 193.1<br>Platinum Pt = 195.2 |
| 11 | — | Gold Au = 197.2 | Mercury Hg = 200.6 | Thallium Tl = 204.0 | Lead Pb = 207.10 | Bismuth Bi = 208.0 | — | — | — |
| 12 | Niton Nt = 222.4 | — | Radium Ra = 226.4 | — | Thorium Th = 232.4 | — | Uranium U = 238.5 | — | — |

**314. Groups and Families.** — An examination of the elements in the groups shown in the vertical columns of the periodic table reveals many interesting facts. First, elements which resemble one another are found in the same group. Second, in a given group certain elements are more closely related than others, giving rise to sub-groups or families. In some of these families the similarity of the members is very marked, e.g. the sodium family (Li, Na, K, etc.) and the halogen family (F, Cl, Br, I). We shall find, as we proceed, that in the groups, and especially in the families, the properties of the elements show a gradation in the same order as their atomic weights (see **331**).

For convenience, the elements discussed in this book have been arranged here as groups and families.

Group O. Inert elements or argon family — helium, neon, argon, krypton, xenon.

Group I. Alkali metals or sodium family — lithium, sodium, potassium.

Univalent heavy metals or copper family — copper, silver, gold.

Group II. Alkaline earth metals or calcium family — calcium, strontium, barium, radium.

Bivalent heavy metals or zinc family — magnesium, zinc, cadmium, mercury.

Group III. Boron family — boron.

Earth metals or aluminium family — aluminium.

Group IV. Quadrivalent non-metals or carbon family — carbon, silicon.

Quadrivalent metals or tin family — tin, lead.

Group V. Quinquivalent non-metals and metals or nitrogen family — nitrogen, phosphorus, arsenic, antimony, bismuth.

Group VI. Hexavalent metals or chromium family — chromium, tungsten, uranium.

Hexavalent non-metals or oxygen family — oxygen, sulphur.

Group VII. Manganese family — manganese.

THIS PAGE IS LOCKED TO FREE MEMBERS
Purchase full membership to immediately unlock this page

Get Smart

Over 2,000 years of human knowledge in 797,885 volumes

Instant access $8.99/month

Continue

*Fair usage policy applies

acidic, but potassium, which is the first metal in the next period, is markedly basic; chlorine is a typical non-metal, while potassium is a typical metal. Not all the periods are as typical as those just cited, nevertheless a careful and comprehensive study of all the elements shows that in most cases their properties vary periodically with the atomic weight. That is, at certain regular intervals or periods in the long series elements will be found which have similar properties; in other words, a certain increase in atomic weight causes a reappearance or return of properties. Mendelejeff summarized these facts in the **Periodic Law,** thus:—

*The properties of the elements are periodic functions of their atomic weights.*

The term *function* as used here means the exhibition of some special relation, viz. that of properties to atomic weight. It is believed now that the relation emphasized by Mendelejeff is not sufficiently accurate to be called a law. However, there is undoubtedly some relation, and we are justified in concluding: (1) properties and atomic weight are related; and (2) this relation is exhibited in very many instances at regular intervals.

**316. Defects of the Periodic Table.** — Examination of the periodic table shows imperfections. For example, there are gaps. These probably correspond to elements not yet discovered. Three such gaps which were in the original table have been filled. When Mendelejeff proposed his arrangement, he predicted the discovery of three elements having definite properties. These elements — gallium, scandium, and germanium — have since been discovered and now occupy their predicted places in the table. Possibly other gaps will be filled by newly discovered elements as was done in the case of the zero group. According to their atomic weights argon and potassium should exchange places; the same is true of iodine and tellurium. Hydrogen also lacks an acceptable place.

## EXERCISES

**1.** State the general physical properties of metals and non-metals.

**2.** Memorize the names of the important metals and non-metals.

**3.** What metals are related to (*a*) sodium, (*b*) lead, (*c*) copper?

**4.** As in Exercise 3, what non-metals to (*a*) carbon, (*b*) chlorine, (*c*) nitrogen, (*d*) sulphur?

**5.** Classify the following into metals and non-metals: aluminium, Zn, Na, silicon, Ca, Cu, bismuth, Pb, Ag, C, manganese, O, H, iron, K, Au, N, hydrogen, Cl, Br, boron, I, S, P.

**6.** What is meant by (*a*) period, (*b*) group, (*c*) family?

**7.** Illustrate the periodic classification by two periods.

**8.** Commit to memory the names of the elements in the following families: (*a*) Argon, (*b*) sodium, (*c*) copper, (*d*) calcium, (*e*) zinc, (*f*) nitrogen, (*g*) chlorine, (*h*) iron.

## PROBLEMS (Review)

**1.** If 36 gm. of copper are heated in air until there is no farther increase in weight, how many grams will be gained?

**2.** Equal weights of sodium and calcium interact with water, and the liberated gas is collected. Which metal yields the larger volume?

**3.** How many grams of zinc must be used with hydrochloric acid to produce 750 cc. of dry hydrogen at 20° C. and 765 mm.?

**4.** At what temperature will 1 l. of chlorine weigh the same as 1 l. of hydrogen? (Assume constant pressure.)

**5.** Calculate the per cent of oxygen in (*a*) water, (*b*) potassium chlorate, (*c*) nitric acid, (*d*) lime, (*e*) silica, (*f*) borax, (*g*) sulphurous acid.

**6.** A candle in burning forms 13.21 gm. of carbon dioxide and 5.58 gm. of water. How much weight did the candle lose? What volume of oxygen at 0° C. and 760 mm. was required?

**7.** What volume of air (free from carbon dioxide and water vapor) contains 1 gm. of nitrogen?

**8.** What weight of sulphur is contained in 500 cc. of $SO_2$?

**9.** Suppose 50 l. of nitrous oxide are decomposed into nitrogen and oxygen. How many volumes of the products are formed?

**10.** One gram of a metal liberated 1.242 l. of hydrogen from hydrochloric acid. The specific heat of the metal was found to be about .23. Calculate (*a*) the equivalent weight and (*b*) atomic weight of the metal. What is the valence of the metal? (Standard conditions.)

**11.** A compound has the composition C = 39.9, H = 6.7, O = 53.4, and the vapor density is 1.906. What is the molecular formula?

# CHAPTER XXII

## FLUORINE — BROMINE — IODINE

Fluorine, bromine, and iodine, together with chlorine, constitute a family of related elements often called the halogens. The elements and their analogous compounds have similar properties, differing mainly in degree (**331**).

### Fluorine

**317. Occurrence.** — Fluorine is the most active of these elements, and is never found free in nature. It occurs abundantly in combination with calcium as calcium fluoride (fluor spar, fluorite, $CaF_2$). Other native compounds are cryolite ($Na_3AlF_6$) and apatite ($Ca_5F(PO_4)_3$). Traces of fluorine compounds are found in bones and blood, in the enamel of the teeth, and in sea and some mineral waters.

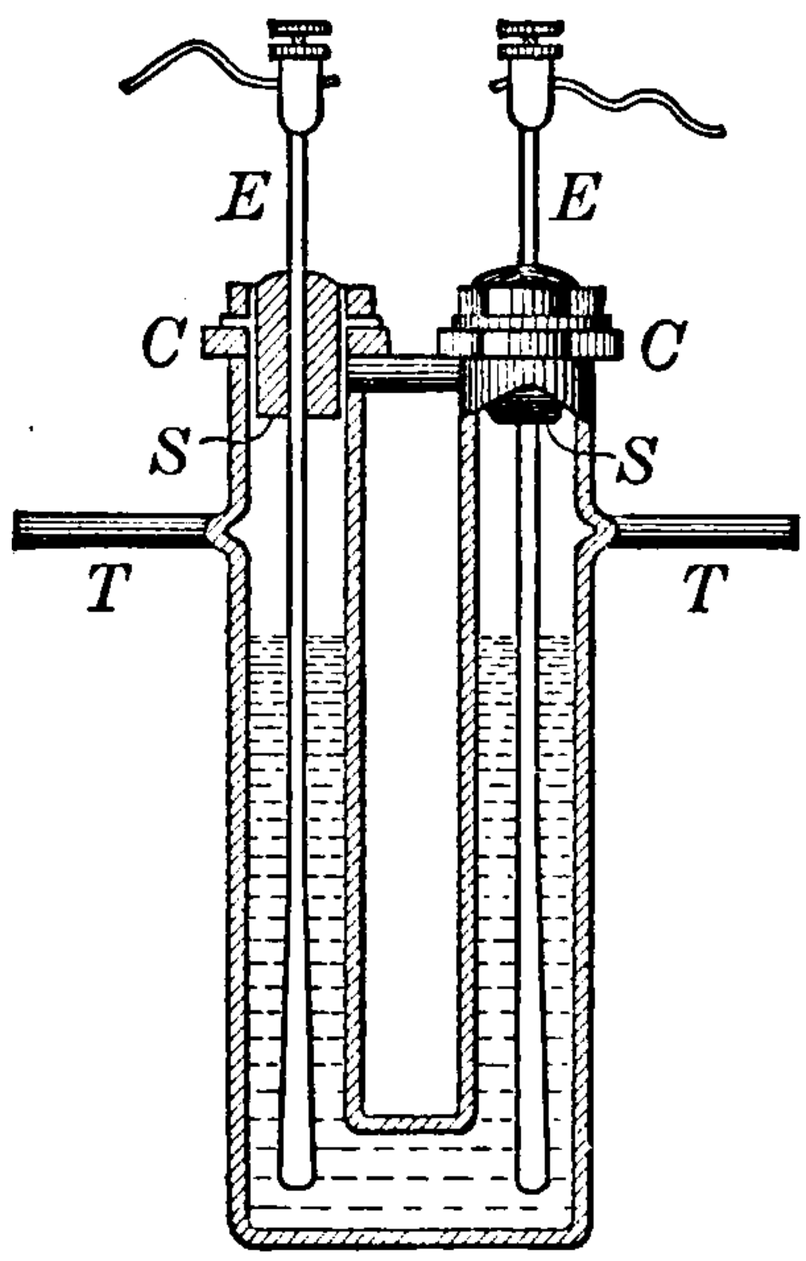

Fig. 74.—Apparatus for Preparing Fluorine.

**318. Preparation.** — Fluorine was first isolated in 1886 by the French chemist Moissan by the electrolysis of hydrofluoric acid. The experiment was difficult and dangerous owing to the corrosive properties of both acid and element. Fluorine is seldom prepared in the laboratory.

A sketch of the apparatus used by Moissan is shown in Fig. 74. The U-tube of platinum has two stoppers of fluor spar (S, S). Through the stoppers pass the electrodes (E, E) of platinum-iridium held in place by screw caps (C, C). Side tubes (T, T) allow the liberated gases (fluorine and hydrogen) to be drawn off. Hydrofluoric

THIS PAGE IS LOCKED TO FREE MEMBERS
Purchase full membership to immediately unlock this page

HISTORY

Tens of thousands of important historical sources, many previously unobtainable, are now available for the first time with a Forgotten Books Full Membership.

Unlimited Access
$8.99/month

Continue

*Fair usage policy applies

similar to hydrochloric acid. Thus, it interacts with metals forming hydrogen and fluorides and it neutralizes bases forming salts and water. Unlike hydrochloric acid, it forms both normal and acid fluorides, e.g. potassium fluoride (KF) and acid potassium fluoride ($HKF_2$).

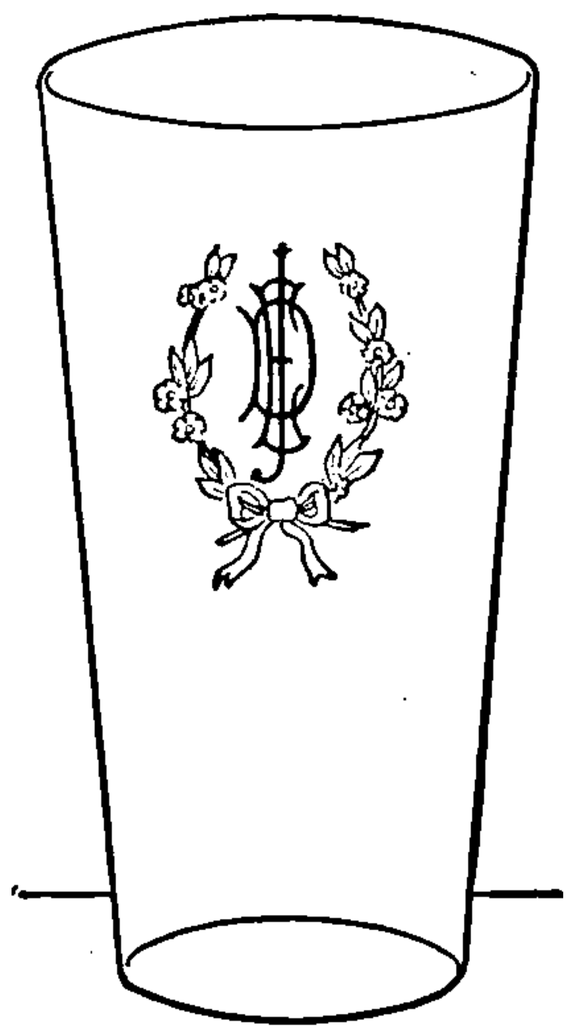

Fig. 75. — Etching on Glass Tumbler—Designed and Executed by a Pupil.

The acid and the moist gas attack glass and are used extensively in **etching.** Glass as we have already seen is a mixture of silicates (**309**). Hydrofluoric acid interacts with these silicates and forms among other substances a volatile compound called silicon tetrafluoride ($SiF_4$). Thus the acid disintegrates the glass — literally "eats" or etches it. Typical equations for the reactions in the case of ordinary sodium glass are: —

$$\underset{\text{Sodium Silicate}}{Na_2SiO_3} + \underset{\text{Hydrofluoric Acid}}{6HF} = \underset{\text{Sodium Tetrafluoride}}{SiF_4} + \underset{\text{Sodium Fluoride}}{2NaF} + \underset{\text{Water}}{3H_2O}$$

$$\underset{\text{Calcium Silicate}}{CaSiO_3} + \underset{\text{Hydrofluoric Acid}}{6HF} = \underset{\text{Silicon Tetrafluoride}}{SiF_4} + \underset{\text{Calcium Fluoride}}{CaF_2} + \underset{\text{Water}}{3H_2O}$$

Hydrofluoric acid also interacts with silicon dioxide, the equation for the reaction being: —

$$\underset{\text{Silicon Dioxide}}{SiO_2} + \underset{\text{Hydrofluoric Acid}}{4HF} = \underset{\text{Silicon Tetrafluoride}}{SiF_4} + \underset{\text{Water}}{2H_2O}$$

In **etching with hydrofluoric acid,** the glass is thinly coated with wax, and the design or scale marks to be etched are scratched through the wax. The glass is then exposed to the gas or liquid, which attacks the unprotected places. When the wax is removed, a permanent

etching is left. Sometimes the design or marking is made more conspicuous by filling the etched cavity with an insoluble white or black substance. Hydrofluoric acid is utilized in marking the scales on the thermometers, tubes, and other graduated glass instruments, and also in etching designs on glassware (Fig. 75). (See Part II, Exp. **152.**)

## Bromine

**321. Occurrence.** — Uncombined bromine is never found, but bromides are widely distributed, especially magnesium, sodium, potassium, and calcium bromides. The salt springs and wells of Ohio, West Virginia, Pennsylvania, and Michigan contain bromides, and large quantities are found in the salt deposits at Stassfurt (**377**).

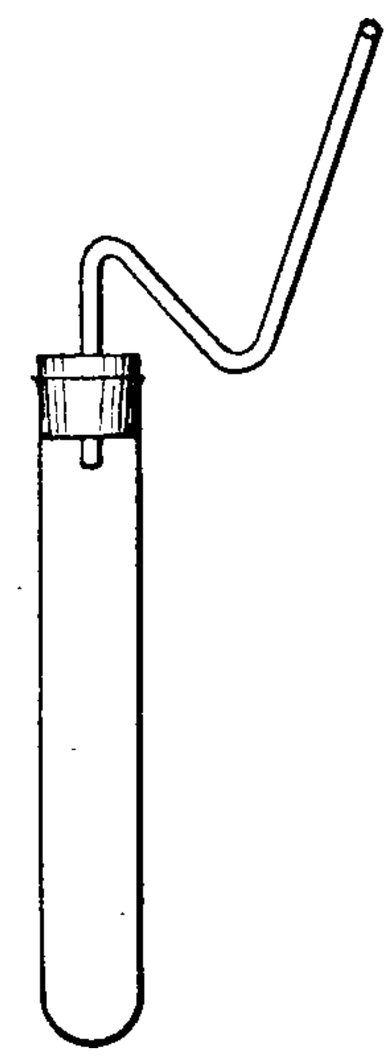

Fig. 76. — Apparatus for Preparing Bromine.

**322. Preparation.** — Bromine is prepared in the laboratory by heating potassium bromide with manganese dioxide and sulphuric acid. If an apparatus like that shown in Fig. 76 is used, part of the bromine vapor escapes and part condenses to a liquid which collects in the V-bend. The complete equation for the reaction, which takes place in several stages, is: —

$$2KBr + 3H_2SO_4 + MnO_2 = Br_2 + MnSO_4 + 2HKSO_4 + 2H_2O$$

Potassium Bromide; Sulphuric Acid; Manganese Dioxide; Bromine; Manganese Sulphate; Acid Potassium Sulphate; Water

Another method consists in warming a bromide solution with chlorine water; an equation for this method is: —

$$MgBr_2 + Cl_2 = Br_2 + MgCl_2$$

Magnesium Bromide; Chlorine; Bromine; Magnesium Chloride

In one commercial process the salt water containing bromides is subjected to electrolysis; bromine and some chlorine are liberated, but the chlorine assists the process by displacing bromine from the bromides (see last equation in the preceding paragraph). In another process sulphuric acid and potassium chlorate are heated with a concentrated solution of bromides called bittern, which is left after the sodium chloride has been removed by crystallization from the salt water; sometimes the bittern is treated with chlorine. It is interesting to note that the French chemist Balard, who discovered bromine in 1826, obtained it from bittern. (See Part II, Exp. **154.**)

**323. Properties.** — Bromine is a reddish brown liquid which is about three times as heavy as water. It is a volatile liquid, boiling at about 59° C. The vapor, which is given off freely, has a disagreeable odor. This property suggested the name bromine (from a Greek word meaning a stench). The vapor irritates the mucous membrane of the eyes, nose, and throat; a bottle of bromine should not be opened unless it is in the hood. Liquid bromine burns the flesh frightfully, and the utmost care should be used in preparing or working with this substance. Bromine is somewhat soluble in water. The solution, called **bromine water,** has a reddish brown color. Bromine also dissolves in carbon disulphide, and the solution is reddish yellow. (See Part II, Exp. **153.**)

Many chemical properties of bromine are similar to those of chlorine, though bromine is less active. Thus, it combines with metals and other elements; it also bleaches.

**324. Uses.** — Bromine is used to prepare bromides and certain dyestuffs.

**325. Compounds of Bromine** are similar to those of chlorine. **Hydrogen bromide** (HBr) is a colorless, pungent gas, which fumes in the air and dissolves freely in water, forming a solution called **hydrobromic acid.** Its other properties closely resemble those of hydrochloric acid. **Bromides** are salts of hydrobromic acid, though many are formed by direct combination with bromine.

THIS PAGE IS LOCKED TO FREE MEMBERS
Purchase full membership to immediately unlock this page

Get Smart

Over 2,000 years of human knowledge in 797,885 volumes

Instant access $8.99/month

Continue

*Fair usage policy applies

$$\underset{\text{Sodium Iodate}}{2NaIO_3} + \underset{\text{Sodium Sulphite}}{3Na_2SO_3} + \underset{\text{Acid Sodium Sulphite}}{2HNaSO_3} = \underset{\text{Iodine}}{I_2} + \underset{\text{Sodium Sulphate}}{5Na_2SO_4} + \underset{\text{Water}}{H_2O}$$

In the second process the seaweed, found principally on the shores of France, Scotland, and Norway, is allowed to ferment and dry, and is then burned. From the ash the soluble salts are extracted, and from the purified solution, in which the iodides are dissolved, the iodine is obtained by treatment with sulphuric acid or with chlorine.

**328. Properties.** — Iodine is a dark grayish crystalline solid, which is nearly five times as heavy as water. It is volatile at ordinary temperatures, and when gently heated changes into a beautiful violet colored vapor, which readily solidifies on a cold surface, often in the upper part of the test tube in which the iodine is heated. This property of iodine, viz. ready transformation from solid into vapor and back to solid, is utilized in purifying iodine. The crude substance is heated gently and the vapor is condensed in a series of vessels; the non-volatile impurities remain behind. This process is called **sublimation** and is frequently used to purify substances. The striking color of the vapor suggested the name iodine (from a Greek word meaning violetlike), which was given to the element by the English chemist Davy, who studied the substance soon after its discovery. The vapor is nearly nine times as heavy as air, and has an odor resembling dilute chlorine, though less irritating. Iodine melts at about 114° C. and boils at about 185° C. Iodine turns cold starch solution blue. The presence of a minute trace of iodine may be thus detected. The exact nature of this blue substance is unknown. The presence of starch in many vegetable substances can be shown by this delicate test. Iodine dissolves slightly in water and freely in alcohol, chloroform, carbon disulphide, ether, and potassium iodide solution. The chloroform and car-

bon disulphide solutions are violet, but the others are brown, or even black. Iodine and its solutions turn the skin brown. (See Part II, Exp. **153.**)

The chemical properties of iodine resemble those of chlorine and bromine, but iodine is less active. Bromine and chlorine displace iodine from many of its compounds.

**329. Uses.** — A solution of iodine in alcohol (or in alcohol and potassium iodide), called tincture of iodine, is used as an application for the skin to prevent the spread of eruptions or to reduce swellings. Iodine is used to make medicinal preparations, especially iodoform ($CHI_3$), which is used as an antiseptic for wounds. Large quantities of iodine are used in making iodides and certain drugs and dyes.

**330. Compounds of Iodine** resemble the corresponding ones of chlorine and bromine, though some are less stable. **Hydriodic acid** (HI) is much like hydrobromic and hydrochloric acids, though unlike them in being a reducing agent. **Iodides** are salts of hydriodic acid. In general behavior they are similar to bromides and chlorides. The best known salt is **potassium iodide** (KI).

**331. The Halogen Elements and the Periodic Classification.** — The halogen elements furnish a typical illustration of the periodic classification. These elements, as arranged in the periodic table, increase in atomic weight from fluorine (19.0) through chlorine (35.46) and bromine (79.92) to iodine (126.92), and many of their properties are graded in this order. Thus, as we pass from fluorine to iodine the specific gravity increases, the color grows deeper, the volatility decreases, and the melting points of the solidified elements and the boiling points of the liquefied elements increase. The intensity of the chemical action decreases as we pass from fluorine to iodine. Other properties of the elements and many properties of their compounds emphasize the fundamental principle of the periodic classification, viz. properties are a periodic function of atomic weights.

## EXERCISES

**1.** Review topics: (*a*) Chlorine, (*b*) compounds of fluorine and silicon, (*c*) periodic classification of the elements.

**2.** Summarize the chief properties of fluorine and hydrogen fluoride.

**3.** Describe the process of etching glass. Express the essential change by an equation.

**4.** Give the equations for the preparation of (*a*) hydrogen fluoride, (*b*) bromine, (*c*) iodine, (*d*) silver bromide.

**5.** Practical questions: (1) Why did Moissan use acid potassium fluoride in the electrolysis of hydrofluoric acid? (2) Hydriodic acid and iodine compounds often turn dark on standing. Why? (3) What gas resembles bromine vapor in color? (4) How does bromine differ from all other elements previously studied (in this book)? (5) How would you identify by experiment (*a*) sand, (*b*) tincture of iodine, (*c*) calcium fluoride, (*d*) potassium bromide, (*e*) silver iodide? (6) How would you distinguish a chloride from an iodide?

**6.** Compare the properties of fluorine, chlorine, bromine, and iodine.

**7.** Essay topics: (*a*) Discovery of the halogen elements. (*b*) Iodine industry in Chile. (*c*) Etching with hydrofluoric acid. (*d*) Uses of iodine.

## PROBLEMS

**1.** Calculate the per cent of fluorine in (*a*) hydrogen fluoride (HF), (*b*) silicon tetrafluoride, (*c*) apatite, (*d*) calcium fluoride.

**2.** Calculate the per cent of bromine or iodine in (*a*) sodium bromide, (*b*) hydrogen bromide, (*c*) calcium iodide, (*d*) sodium iodate, (*e*) hydrogen iodide, (*f*) iodoform.

**3.** How much (*a*) calcium sulphate and (*b*) hydrogen fluoride are formed by heating 60 gm. of fluor spar with sulphuric acid?

**4.** How much iron iodide ($Fe_3I_8$) can be made by the interaction of iron and 300 gm. of iodine?

**5.** How much potassium bromide (75 per cent pure) is necessary to prepare 47 gm. of bromine?

**6.** How much potassium iodide (80 per cent pure) is necessary to prepare 25 gm. of iodine?

**7.** Write the formulas of the fluoride, bromide, and iodide of Al, ammonium, Ba, Ca, copper (ous and ic), $Fe^{II}$ $Fe^{III}$, Pb, magnesium, $Sb^{III}$, Si, Hg (ous and ic), $Sn^{II}$, $Sn^{IV}$, zinc.

**8.** Calculate the atomic weight of fluorine, bromine, or iodine from the following: (*a*) 1 gm. of $CaF_2$ gives 1.745 gm. of $CaSO_4$; (*b*) 3.946 gm. of Ag (dissolved in $HNO_3$) require 4.353 gm. of KBr for precipitation; (*c*) 6.3835 gm. of silver iodide give 3.8965 gm. of silver chloride.

THIS PAGE IS LOCKED TO FREE MEMBERS
Purchase full membership to immediately unlock this page

HISTORY

Tens of thousands of important historical sources, many previously unobtainable, are now available for the first time with a Forgotten Books Full Membership.

Unlimited Access
$8.99/month

Continue

*Fair usage policy applies

The phosphorus distils as a vapor through a pipe into a trough of water where it condenses as a heavy liquid. In the **new process** phosphorus is manufactured in an electric furnace. The mixture of phosphate, carbon, and sand is introduced at A and fed into the furnace by the screw B. An electric current passed between the electrodes E, E produces the intense heat needed for the chemical change. The phosphorus vapor escapes through C into a condenser; the liquid residue, which is essentially calcium silicate, is drawn off as slag at D (Fig. 77). The equation for the chemical change is —

$$\underset{\text{Calcium Phosphate}}{2Ca_3(PO_4)_2} + \underset{\text{Sand}}{6SiO_2} + \underset{\text{Carbon}}{10C} = \underset{\text{Phosphorus}}{P_4} + \underset{\text{Carbon Monoxide}}{17CO} + \underset{\text{Calcium Silicate}}{6CaSiO_3}$$

The product obtained by either method is purified and pressed through chamois skin or canvas into molds cooled by water.

**334. Properties.** — Phosphorus exists in two allotropic modifications, called respectively yellow, white, or waxy phosphorus and red or amorphous phosphorus (see **181**). The phosphorus prepared by the methods just described is the **yellow** or **ordinary** form. It is a colorless or slightly yellow, translucent solid. The color deepens by exposure to light. At ordinary temperatures it is like wax, but at low temperatures it is brittle. It melts at 44° C. but it should be melted under water. When exposed to air it soon gives off white fumes, and at about 34° C. takes fire and burns with a brilliant flame. Hence phosphorus is kept beneath water and should not be handled unless it is wet; indeed it is better not to touch it at all, but to use wet forceps when it is necessary

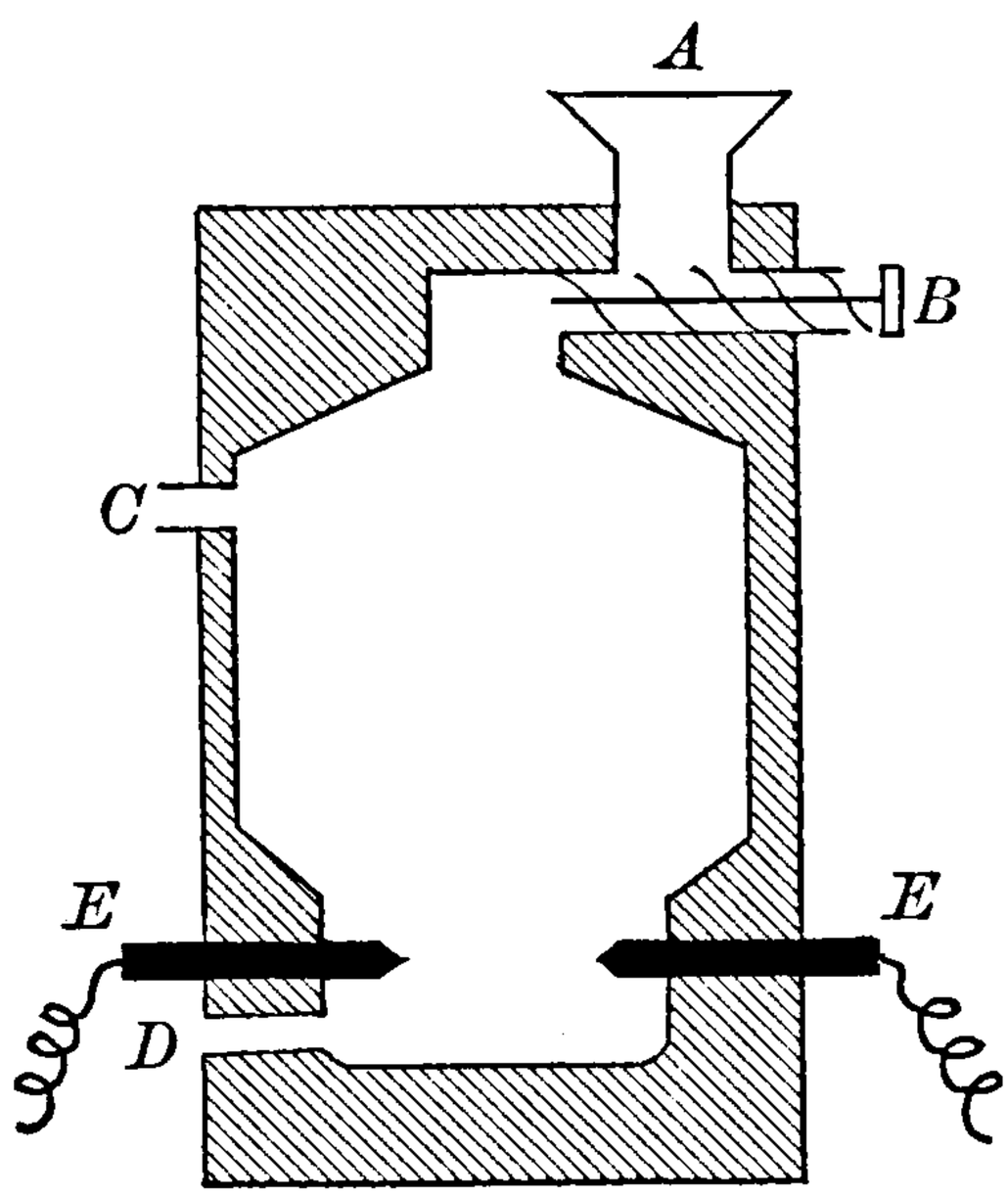


Fig. 77. — Electric Furnace for the Manufacture of Phosphorus.

to transfer it or to hold it while it is being cut under water. Moreover unusual care should be taken not to leave bits of phosphorus in deflagrating spoons or lying about the laboratory. In moist air it is slightly luminous, as may be easily seen by rubbing the head of a phosphorus tipped match in a dark room. This property gave the element its name (from a Greek word meaning light bringer). The ease with which it ignites makes phosphorus dangerous to handle. Burns from it heal slowly. It is very poisonous, and the fumes cause a dreadful disease, which rots the bones, especially the jaw bones. It is practically insoluble in water, but dissolves readily in carbon disulphide and slightly in sodium hydroxide solution. Yellow phosphorus has a faint odor, which may be easily detected by smelling a match head. **Red phosphorus** is made by heating ordinary phosphorus to 250°–300° C. in a closed vessel freed from air. Red phosphorus is a reddish brown powder. It is opaque and odorless, does not glow in the air, nor does it ignite until heated to about 260° C. It is not poisonous, and does not dissolve in carbon disulphide. Its specific gravity varies from 2.1 to 2.3, that of the yellow form being 1.83. It does not combine with oxygen at ordinary temperatures and being less dangerous than yellow phosphorus can be handled safely. (See Part II, Exp. **164**.)

The **vapor density** of both kinds of phosphorus up to about 1500° C. is such that its molecule must contain four atoms, and the usual molecular formula of the vapor is written $P_4$.

**335. Phosphorus Oxides.** — There are two important oxides. **Phosphorus trioxide** ($P_2O_3$) is a white solid formed by the slow oxidation of phosphorus or by burning phosphorus in a limited supply of air. It has the odor of phosphorus and is poisonous. Warmed in the air, it changes into the pentoxide. It unites with water to form phosphorous acid, thus —

$$\underset{\text{Phosphorus Trioxide}}{P_2O_3} + \underset{\text{Water}}{3H_2O} = \underset{\text{Phosphorous Acid}}{2H_3PO_3}$$

**Phosphorus pentoxide** ($P_2O_5$) is the white, snowlike solid formed by burning phosphorus in an abundant supply of air. It is very deliquescent, quickly withdrawing moisture from air and combining vigorously with water with a hissing noise. It is often used in the laboratory to dry gases, being much more effective than calcium chloride and sulphuric acid, which are commonly employed.

**336. Phosphoric Acids and Phosphates.** — The three phosphoric acids are orthophosphoric ($H_3PO_4$), metaphosphoric ($HPO_3$), and pyrophosphoric ($H_4P_2O_7$). Each acid forms many salts called phosphates.

**337. Orthophosphoric Acid** is a white, crystalline, deliquescent solid, though it usually is sold as a thick solution. A commercial grade is obtained as a by-product in the first step of the manufacture of phosphorus from calcium phosphate (**333**). The pure acid is made by oxidizing phosphorus with nitric acid, or by dissolving phosphorus pentoxide in hot water, thus (in the latter case): —

$$\underset{\text{Phosphorus Pentoxide}}{P_2O_5} + \underset{\text{Water}}{3H_2O} = \underset{\text{Orthophosphoric Acid}}{2H_3PO_4}$$

**338. Metaphosphoric Acid** at ordinary temperatures is a glassy solid, and is therefore often called **glacial phosphoric acid.** It is formed by heating orthophosphoric acid, thus: —

$$\underset{\text{Orthophosphoric Acid}}{H_3PO_4} = \underset{\text{Metaphosphoric Acid}}{HPO_3} + \underset{\text{Water}}{H_2O}$$

It may be formed by dissolving the pentoxide in cold water, thus: —

$$P_2O_5 + H_2O = 2HPO_3$$

Metaphosphoric acid dissolves readily in water, and the solution changes into orthophosphoric acid — slowly in the cold, rapidly when boiled.

**339. Pyrophosphoric Acid** is an amorphous, glassy (but sometimes crystalline) solid. It is formed by heating orthophosphoric acid to about 215° C. The equation for the reaction is —

$$\underset{\text{Orthophosphoric Acid}}{2H_3PO_4} = \underset{\text{Pyrophosphoric Acid}}{H_4P_2O_7} + H_2O$$

THIS PAGE IS LOCKED TO FREE MEMBERS
Purchase full membership to immediately unlock this page

Get Smart

Over 2,000 years of human knowledge in 797,885 volumes

Instant access $8.99/month

Continue

*Fair usage policy applies

($PCl_5$) is a greenish solid made by passing chlorine into a vessel containing the trichloride.

**343. Matches.** — Phosphorus until recently was chiefly used in the manufacture of matches. Now however a phosphorus sulphide ($P_4S_3$) is generally used in the United States as a substitute for the element. This change was made on account of a prohibitive tax upon phosphorus matches. The law imposing the tax was passed partly on account of the fires accidentally caused by ignition of matches but mainly to protect the workmen from the disease caused by breathing phosphorus fumes. Ordinary matches are made by dipping one end of the match sticks first into melted sulphur or paraffin and then into the "phosphorus mixture." The latter consists usually of different proportions of (1) phosphorus sulphide, (2) manganese dioxide or another oxidizing substance, and (3) glue or some other binding material mixed with a little coloring matter. These matches are the ordinary friction or sulphur kind. By rubbing them on a rough surface the friction generates enough heat to ignite the phosphorus, which continues to burn owing to the oxygen supplied (mainly) by the oxidizing agent, and the heat thereby produced sets fire to the sulphur or paraffin, and this in turn kindles the wood. In safety matches the head is usually a colored mixture of antimony sulphide, potassium chlorate, and glue, while the surface on the box upon which the match must be rubbed to ignite is a mixture of red phosphorus, glue, and powdered glass.

**344. Relation of Phosphorus to Life.** — Phosphorus is essential to the growth of plants and animals. Plants take phosphates from the soil and store up the phosphorus compounds, especially in their seeds. Animals eat this vegetable matter, assimilate the phosphorus compounds, and deposit them in the bones, brain, and nerve tissue. Most of these phosphorus compounds are complex. Bones however, as already stated, consist of about 80 per cent of calcium phosphate ($Ca_3(PO_4)_2$). The complex phosphorus compounds consumed by animals as parts of food are transformed by vital processes into phosphates which are eliminated and thus often find their way back into the

soil to some extent. Here they are taken up again by plants, converted into complex compounds, stored up in the tissues and seeds, which are in turn eaten by animals. And so the process goes on — a phosphorus cycle analogous to the carbon cycle (**186**).

In order to furnish plants with phosphorus various phosphorus-bearing substances are added to the soil in the form of natural or artificial **fertilizers.** Natural fertilizers are (1) stable refuse, which always contains some of the phosphates from the food originally fed to the animals; (2) guano, which is dried excrement and carcasses of the sea birds that once lived in vast numbers in Peru and Chile; and (3) phosphate slag, which is a phosphorus by-product obtained in manufacturing steel. These natural phosphatic materials as well as bones are ground and spread upon the soil. Artificial fertilizers are made from phosphate rock. This occurs in large beds in South Carolina, Tennessee, and Florida, which yield about a million tons a year. It consists of the hardened remains of land and marine animals, and is mainly tricalcium phosphate ($Ca_3(PO_4)_2$). It is insoluble in water, and must be changed into the soluble monocalcium salt ($H_4Ca(PO_4)_2$), so that it can be evenly distributed through the soil and easily taken up by plants. This soluble salt is called "superphosphate of lime." When phosphate rock is treated with sulphuric acid, the changes involved may be written thus: —

$$\underset{\text{Tricalcium Phosphate}}{Ca_3(PO_4)_2} + 2H_2SO_4 = \underset{\text{"Superphosphate of Lime"}}{H_4Ca(PO_4)_2} + \underset{\text{Calcium Sulphate}}{2CaSO_4}$$

$$Ca_3(PO_4)_2 + 3H_2SO_4 = \underset{\text{Phosphoric Acid}}{2H_3PO_4} + 3CaSO_4$$

$$Ca_3(PO_4)_2 + H_2SO_4 = \underset{\text{Dicalcium Phosphate}}{H_2Ca_2(PO_4)_2} + CaSO_4$$

Sometimes "superphosphate" is mixed with compounds of nitrogen and of potassium to form a complete fertilizer (**98, 386**). The law requires the dealer to state the analysis of the fertilizer on the bag or label. The per cent of phosphorus is usually stated as per cent of $P_2O_5$, which is popularly but incorrectly called "phosphoric acid."

## Arsenic

**345. Occurrence.** — Arsenic is occasionally found free in nature, but it usually occurs combined with sulphur or a metal, or with both, e.g. as realgar ($As_2S_2$), orpiment ($As_2S_3$), arsenopyrite or mispickel (FeSAs). Small quantities occur in ores, especially sulphides.

**346. Properties and Use.** — Arsenic is a brittle, steel-gray solid having a metallic luster. Heated in the air, it volatilizes without melting, and the vapor has an odor like garlic. At about 180° C. it burns in the air with a bluish flame, forming white arsenious oxide ($As_2O_3$). Arsenic is used to harden the lead which is made into shot.

The molecules of arsenic vapor at about 650° C. contain four atoms, hence the molecular formula $As_4$.

**347. Arsenious Oxide,** $As_2O_3$, is the most important compound of arsenic. It is often called "white arsenic," or simply "arsenic." It is obtained by roasting arsenic ores. It is odorless, has a slight taste, and dissolves slightly in cold water. It is converted readily by hot hydrochloric acid into soluble arsenic trichloride ($AsCi_3$), which is a convenient solution of arsenic to use in the laboratory. *Arsenic trioxide is a rank poison.* The antidote for arsenic poisoning is fresh ferric hydroxide, which is made by adding ammonium hydroxide to a ferric salt, e.g. ferric chloride, which forms an insoluble substance with the arsenic compound. Arsenic trioxide is used to a limited extent in making pigments for green paints, as the poisonous ingredient of fly and rat poison, in the manufacture of glass (especially plate and window glass), in making arsenic compounds (e.g. insecticides (**348**)), for destroying weeds, and in preserving skins in museums. As a medicine it is sometimes used to purify the blood.

**348. Other Arsenic Compounds.** — The native mineral **orpiment** ($As_2S_3$) is used in making a yellow paint, and **realgar** ($As_2S_2$) a red

THIS PAGE IS LOCKED TO FREE MEMBERS
Purchase full membership to immediately unlock this page

HISTORY

Tens of thousands of important historical sources, many previously unobtainable, are now available for the first time with a Forgotten Books Full Membership.

Unlimited Access
$8.99/month

Continue

*Fair usage policy applies

**352. Alloys of Antimony.** — When antimony is melted with some metals, especially lead and tin, the metals dissolve one another. Such a metallic solution upon cooling forms an **alloy.** Alloys have different, often very different, properties from the original metals. Thus, alloys of antimony and lead expand on cooling and are used as type metal because they reproduce sharply the dots and fine lines. Other alloys, like Babbitt metal, are used for bearings of machines.

**353. Compounds of Antimony.** — Antimony forms stibine ($SbH_3$), which is analogous to ammonia ($NH_3$). It also forms complex compounds in which the group SbO — called antimonyl — acts as a univalent radical, e.g. **tartar emetic** or potassium antimonyl tartrate ($KSbOC_4H_4O_6$), which is used as a medicine and as a mordant in dyeing cotton. **Antimony trisulphide** ($Sb_2S_3$) is obtained as an orange red precipitate by passing hydrogen sulphide gas into a solution of an antimony salt — the usual **test for antimony.** This sulphide is used in making the red rubber tubing and stoppers used in the laboratory. **Antimony trichloride** ($SbCl_3$) is formed by the action of chlorine upon the metal or by interaction with *aqua regia.* It hydrolyzes readily, i.e. interacts with water, thus: —

| $SbCl_3$ | + | $H_2O$ | = | $SbOCl$ | + | $2HCl$ |
|---|---|---|---|---|---|---|
| Antimony Trichloride | | Water | | Antimony Oxychloride | | Hydrocholoric Acid |

**Antimony oxychloride** is a white solid insoluble in water, and its formation is sometimes used as a **test for antimony.** (See Part II, Exps. **162, 163.**)

## Bismuth

**354. Occurrence.** — Bismuth is usually found in the native state, though it is not abundant nor widely distributed. The oxide (bismite, $Bi_2O_3$) and the sulphide (bismuthinite, $Bi_2S_3$) are the common native compounds.

**355. Preparation.** — Bismuth is prepared from the native metal by melting it on an inclined plate and allowing it to drain away from the solid impurities. Sometimes the sulphide is roasted, and the resulting oxide is reduced with charcoal, as in the case of antimony.

**356. Properties.** — Bismuth is a silvery metal with a reddish tinge. Like antimony, it is very brittle. Its specific gravity is about 9.9. It does not tarnish in dry air, but it grows dull in moist air; and when heated in air it burns with a bluish flame, forming the yellowish trioxide ($Bi_2O_3$). Hydrochloric acid does not readily attack it, but hot concentrated nitric acid converts it into a nitrate and hot sulphuric acid into a sulphate. *Aqua regia* transforms it into soluble bismuth chloride ($BiCl_3$). (See Part II, Exp. **167.**)

Bismuth melts at 271° C. But alloys of bismuth, lead, and tin melt at a much lower temperature. For example, Newton's metal melts at 94.5° C. and Rose's metal at 93.8° C.; while Wood's metal, which contains the metal cadmium also, melts at only 60.5° C. These metallic mixtures are called **fusible metals.** They are used in making safety plugs for steam boilers, fuses for electrical apparatus, and connectors to hold in place automatic fireproof doors and to close temporarily the valves in the automatic sprinkling apparatus frequently installed in large buildings (Fig. 78 — fusible metal at A). (See Part II, Exp. **169.**)

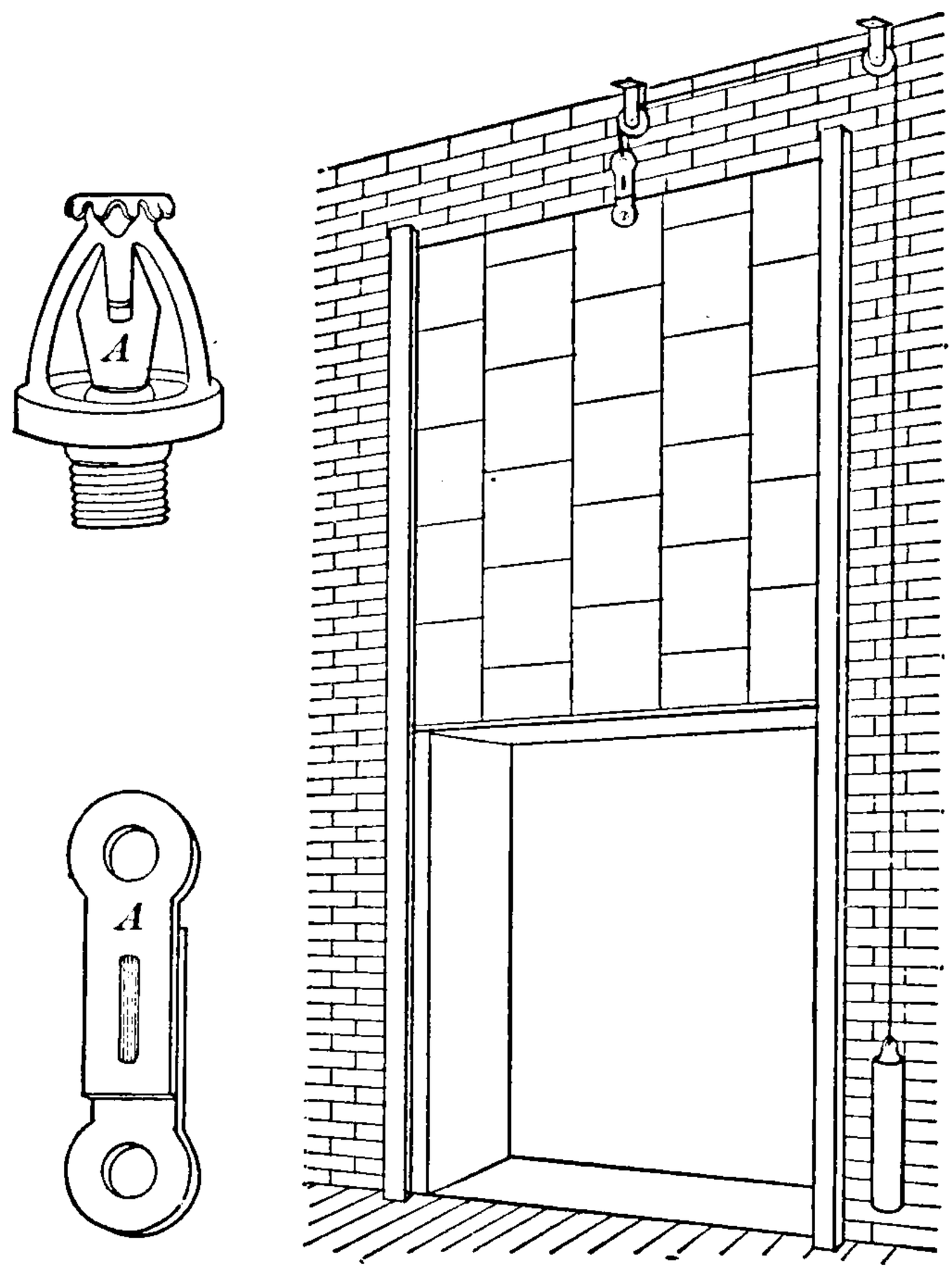


Fig. 78. — Sprinkler Head, Fusible Link, and Fire-Proof Door Held in Place by a Link of Fusible Metal.

**357. Compounds of Bismuth.** — Bismuth trioxide ($Bi_2O_3$) is a yellowish crystalline powder and is used to fix the gilding on porcelain. Bismuth sulphide ($Bi_2S_3$) is obtained as a black precipitate by passing hydrogen sulphide into a solution of a bismuth salt. The **trichloride** ($BiCl_3$) is formed by the action of chlorine upon bismuth, or by treating bismuth with *aqua regia*. With an excess of water the trichloride undergoes hydrolysis, forming basic bismuth chloride ($Bi(OH)_2Cl$) which by loss of water becomes **bismuth oxychloride** ($BiOCl$). The latter is a pearl-white powder, insoluble in water, and its formation is the usual **test for bismuth.** Bismuth forms the hydroxides ($Bi(OH)_3$ and $BiO.OH$). Normal bismuth nitrate ($Bi(NO_3)_3$) when treated with hot water forms basic bismuth nitrate ($Bi(OH)_2NO_3$ or $BiONO_3$). The latter, often called **subnitrate of bismuth,** is a white tasteless powder, and is used as a medicine for dyspepsia and as a cosmetic. (See Part II, Exp. **168.**)

## EXERCISES

**1.** Discuss the occurrence of phosphorus.

**2.** Describe the manufacture of phosphorus (*a*) from a phosphate and sulphuric acid and (*b*) by the electric method.

**3.** Summarize the properties of (*a*) ordinary phosphorus and (*b*) red phosphorus. Why is phosphorus so named?

**4.** What is the formula of (*a*) tricalcium phosphate, (*b*) "sodium phosphate," (*c*) monohydrogen calcium orthophosphate, (*d*) superphosphate of lime, (*e*) dihydrogen dicalcium orthophosphate?

**5.** Discuss the relation of phosphorus to life. Compare with nitrogen and carbon in this respect. Describe the manufacture of phosphate fertilizer.

**6.** Suggest an experiment to show that bones contain calcium phosphate.

**7.** By what other names is arsenic trioxide known? What is the antidote for arsenic poisoning?

**8.** What is (*a*) Paris green, (*b*) orpiment, (*c*) realgar, and (*d*) lead arsenate? For what is each used?

**9.** Describe a test for (*a*) arsenic, (*b*) antimony, and (*c*) bismuth.

**10.** State the uses of alloys of (*a*) antimony and (*b*) bismuth.

## PROBLEMS

**1.** Calculate the weight of phosphorus in (*a*) 40 metric tons of calcium orthophosphate, (*b*) 27 gm. of silver metaphosphate, and (*c*) 2 kg. of sodium pyrophosphate.

THIS PAGE IS LOCKED TO FREE MEMBERS
Purchase full membership to immediately unlock this page

Get Smart

Over 2,000 years of human knowledge in 797,885 volumes

Instant access $8.99/month

Continue

*Fair usage policy applies

# CHAPTER XXIV

## SODIUM — POTASSIUM — AMMONIUM COMPOUNDS

Sodium and potassium belong to a natural family of elements known as the **alkali metals.**

### Sodium

**358. Occurrence.**—Sodium is not found free, but its compounds are abundant and widely distributed, especially sodium chloride. Many rocks, sea water and mineral waters, and salt deposits contain sodium compounds.

The symbol of sodium, Na, is from the Latin *natrium*, which comes from the Greek *natron*, an old name of sodium carbonate.

**359. Preparation.** — Sodium is manufactured on a large scale by the electrolysis of fused sodium hydroxide. This was the method by which the English chemist Davy isolated sodium in 1807. Figure 79 is a sketch of one form of the apparatus now used at Niagara Falls, where many electrical industries are located. The body of the steel cylinder (S) rests within a heated flue. The iron cathode (C) passes up through the bottom of the cylinder, while several connected carbon or iron rods (AA) enter from above and constitute the anode. A cylindrical collecting pot (P) terminating in a wire gauze surrounds the cathode; it prevents the

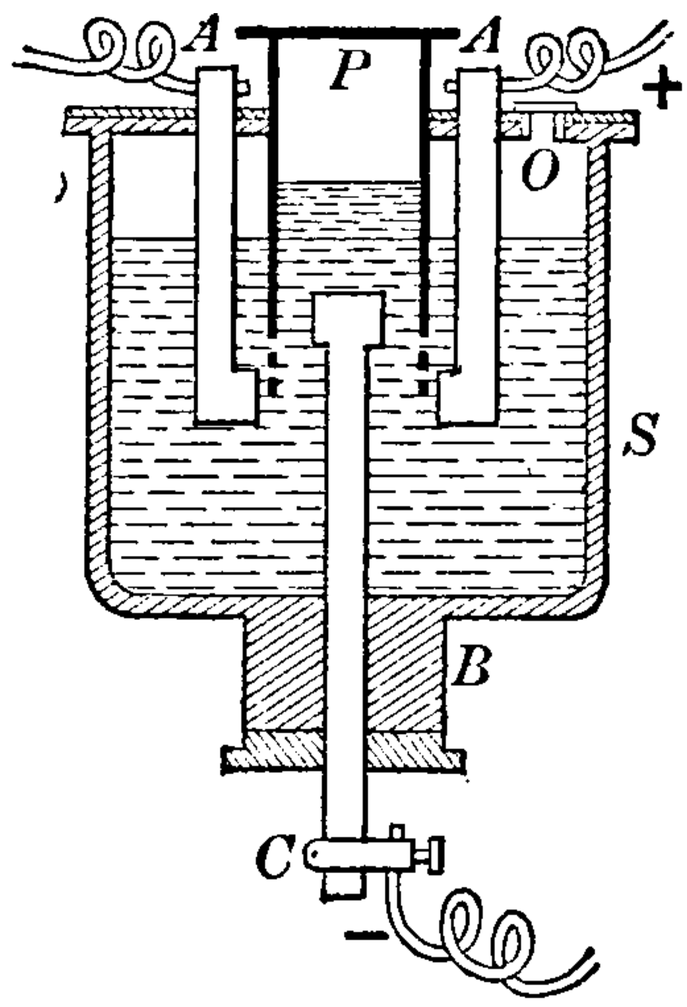


Fig. 79. — Apparatus for the Manufacture of Sodium by the Electrolysis of Sodium Hydroxide.

electrodes from touching, and does not interfere with the circulation of the molten sodium hydroxide. The vessel (S) is filled with sodium hydroxide, the lower portion in the neck (B) being solid, the upper part being kept molten either by heat genererated by the current or by auxiliary gas burners. As the electrolysis proceeds, sodium and hydrogen are liberated at the cathode, rise, and collect in P. The hydrogen escapes to some extent through the cover, but enough always remains in the upper part of P to protect the sodium from the air while the molten metal is being removed. Oxygen is liberated at the anode and escapes through the pipe O without coming in contact with the sodium or hydrogen.

**360. Properties.**—Sodium is a silver-white metal. It is so soft that it can be easily molded with the fingers and cut with a knife. It floats on water, since its specific gravity is only about 0.97. Heated in air, it melts at 96° C., and at a higher temperature it volatilizes and burns with a brilliant yellow flame, forming sodium oxide. This intense yellow color is characteristic of sodium and its compounds and is the usual **test for the element** (free or combined). In moist air the bright surface quickly tarnishes, and sodium as usually seen has a yellow or brownish coating. It is, therefore, kept under kerosene or a liquid free from water. (See Part II, Exps. **12 D, 29, 176.**)

Sodium decomposes water at ordinary temperatures, liberating hydrogen and forming sodium hydroxide, thus:—

$$\underset{\text{Sodium}}{2Na} + \underset{\text{Water}}{2H_2O} = \underset{\text{Sodium Hydroxide}}{2NaOH} + \underset{\text{Hydrogen}}{H_2}$$

If held in one place upon water by filter paper, enough heat is generated to set fire to the hydrogen, which burns

with a yellow flame, owing to the presence of volatilized sodium. Sodium like other metals interacts with acids, forming salts and liberating hydrogen.

Sodium is used in the manufacture of sodium peroxide ($Na_2O_2$) and sodium cyanide (NaCN).

**361. Sodium Chloride,** NaCl, is the most important compound of sodium. It is familiar under the name of **salt** or **common salt.** The presence of salt in the ocean, in lakes and springs, and in the earth is mentioned in the oldest historical records. It is one of the most abundant substances and is the chief source of sodium compounds.

**362. Preparation of Common Salt.** — Salt is obtained from sea water, rock salt deposits, and brines. Sea water contains nearly 4 per cent of salts, and three fourths of this amount is sodium chloride. The water is evaporated, often by exposure to the sun, and the salt separates from the concentrated solution. Deposits of salt are found in many parts of the globe, the most important being in England, Austria-Hungary, and Germany. In these regions and some parts of the United States, the salt is mined like other minerals. In the United States much salt is obtained from natural or artificial brines, i.e. from strong solutions of salt.

According to the standard established by the United States Department of Agriculture, dry table or dairy salt must not contain over 1.4 per cent of calcium sulphate, .5 per cent of calcium and magnesium chlorides, and .1 per cent of matter insoluble in water. The dampness of salt is due to traces of magnesium and calcium chlorides (**51**). Pure salt does not absorb moisture.

**363. Properties and Uses of Common Salt.** — Salt is rather uniformly soluble in water, 100 gm. of water dissolving about 36 gm. of salt at 20° C., and about 39 gm. at 100° C. (Fig. 16). It crystallizes in cubes, and does not contain water of crystallization. These crystals, when heated, often snap open sharply (i.e. decrepitate), owing to the sudden evaporation of inclosed water. It melts at

THIS PAGE IS LOCKED TO FREE MEMBERS
Purchase full membership to immediately unlock this page

HISTORY

Tens of thousands of important historical sources, many previously unobtainable, are now available for the first time with a Forgotten Books Full Membership.

Unlimited Access
$8.99/month

Continue

*Fair usage policy applies

The acid sodium carbonate is sparingly soluble in cold ammonium chloride solution, and is therefore precipitated. (See Part II, Exp. **177.**) The acid sodium carbonate is changed into normal sodium carbonate by heating, thus: —

$$\underset{\text{Acid Sodium Carbonate}}{2HNaCO_3} = \underset{\text{Sodium Carbonate}}{Na_2CO_3} + \underset{\text{Carbon Dioxide}}{CO_2} + \underset{\text{Water}}{H_2O}$$

**367. Properties and Uses of Sodium Carbonate.** — Crystallized sodium carbonate ($Na_2CO_3.10H_2O$) is often called **sal soda** or **washing soda.** It slowly loses its water of crystallization when exposed to air. When heated, it dissolves in its water of crystallization, and continued heating changes it into the white anhydrous salt ($Na_2CO_3$). It is soluble in water, and the alkaline solution is widely used as a cleansing agent; hence the name washing soda. Enormous quantities are used in the manufacture of glass, soap, and many other useful substances (**310, 249**).

The alkalinity of sodium carbonate solution is due to hydrolysis (**165**), and is thus explained in terms of the ionic hypothesis: Sodium carbonate ionizes into $2Na^+$ and $CO_3^{--}$, but the unstable $CO_3$-ions form $HCO_3$-ions with the H-ions from the slightly dissociated water. This removal of H-ions finally leaves in the solution sufficient OH-ions to produce alkalinity.

**368. Sodium Bicarbonate,** $HNaCO_3$, is prepared by the Solvay process (see above), or by treating a sodium carbonate solution with carbon dioxide gas. It is sometimes called acid sodium carbonate (though it is nearly neutral to litmus) and hydrogen sodium carbonate. It is a white powder, less soluble in water than the normal carbonate. When heated alone or when mixed with an acid or an acid salt, sodium bicarbonate gives up carbon dioxide. This property early led to its use in cooking, and gave the names **cooking soda, baking soda,** or simply **soda.**

**369. Baking Powder.** — Sodium bicarbonate is an essential ingredient of **baking powder** and of the various mixtures (except yeast) used to raise bread, cake, and other food. The other ingredient is usually a mild acid salt, such as an acid phosphate (**340**) or cream of tartar (acid potassium tartrate ($HKC_4H_4O_6$) ), which slowly liberates the carbon dioxide from the sodium bicarbonate (**243**). Sour milk, which contains lactic acid, is sometimes used in place of cream of tartar (**241**). When pastry is raised with baking powder or a mixture of baking soda and cream of tartar, the escaping carbon dioxide puffs up the unbaked mixture. Hence baking soda is often called **saleratus** — the salt that aerates (from the Latin words *sal*, salt, and *aer*, air or gas). (See Part II, Exp. **113.**)

**370. Sodium Hydroxide** or **Caustic Soda,** NaOH, is a white, crystalline, brittle, corrosive solid. It absorbs water and carbon dioxide rapidly from the air, and is thereby changed into sodium carbonate. It dissolves readily in water, with rise of temperature. The solution is strongly alkaline and disintegrates many substances, hence the term *caustic*. It melts easily. Immense quantities are used in making hard soap, paper, and dyestuffs.

**371. Manufacture of Sodium Hydroxide.** — The **chemical process** consists in boiling a dilute solution of sodium carbonate with calcium hydroxide; the main change is represented thus: —

$$\underset{\text{Calcium Hydroxide}}{Ca(OH)_2} + \underset{\text{Sodium Carbonate}}{Na_2CO_3} = \underset{\text{Sodium Hydroxide}}{2NaOH} + \underset{\text{Calcium Carbonate}}{CaCO_3}$$

The solution of sodium hydroxide is evaporated and the molten mass is allowed to solidify in small cylindrical molds about the diameter of a lead pencil or in large iron barrels called drums. In the **electrolytic process,** which is operated on a large scale at Niagara Falls, New York, a solution of sodium chloride is used. One form of apparatus is shown in Fig. 80. It consists of a slate box divided into one cathode and two anode compartments by partitions extending nearly to the bottom; the compartments are separated by a layer of mercury (shown in black). The T-shaped anodes (A, A) of graphite and the cathode (C) of iron reach nearly to the mercury. The anode com-

partments contain sodium chloride solution, while the cathode compartment contains sodium hydroxide solution; sodium chloride solution of the right concentration flows slowly and continuously through the anode compartments by means of the pipes E, E (and outlets not shown). When the current passes, chlorine is evolved at

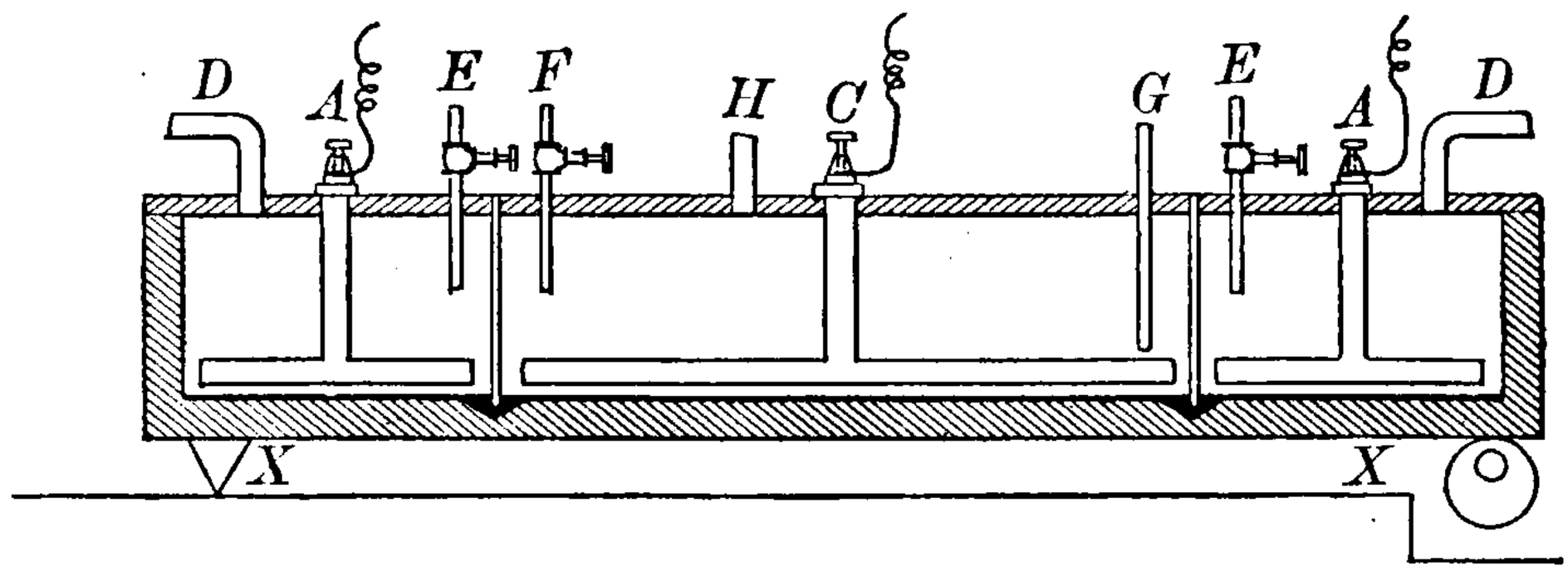


Fig. 80. — Apparatus for the Manufacture of Sodium Hydroxide by Electrolysis of Sodium Chloride.

the anodes and escapes through the pipes D, D; the sodium is liberated at the intermediate cathode of mercury and forms an amalgam with it. By carefully rocking the cell on the device X, X the sodium amalgam alone flows beneath the partitions into the cathode compartment, where the sodium is liberated at the iron cathode; the sodium at once reacts with the water forming hydrogen and sodium hydroxide. The hydrogen escapes through the pipe H, while the sodium hydroxide solution is allowed to become concentrated, being then drawn off (through G) and replaced by water (through F). The sodium hydroxide solution is treated as described above, while the chlorine is stored in steel cylinders or used directly in manufacturing bleaching powder and other chlorine compounds (**75, 79, 80**).

**372. Sodium Sulphate,** $Na_2SO_4$, is a white solid. It dissolves readily in water, and when a strong solution made at 30° C. is cooled, large transparent, bitter crystals separate. They have the formula $Na_2SO_4.10H_2O$ and are called Glauber's salt. Large quantities are used in making sodium carbonate and glass (**365, 309, 310**).

Sodium sulphate is prepared by the interaction of sodium chloride and sulphuric acid (**83, 365**) or magnesium sulphate. The equation for the latter reaction is —

THIS PAGE IS LOCKED TO FREE MEMBERS
Purchase full membership to immediately unlock this page

Get Smart

Over 2,000 years of human knowledge in 797,885 volumes

Instant access $8.99/month

Continue

*Fair usage policy applies

potassium sulphate. Extensive beds of potassium salts are found in Germany, especially at Stassfurt.

**377. The Stassfurt deposits** of the salts of potassium and other metals consist of about thirty different salts. The deposits were doubtless formed ages ago by the evaporation of an inclosed arm of the sea under special conditions. The lowest bed is an enormous mass of rock salt. Upon this rest more or less regular layers of potassium and magnesium salts, and higher still are calcium salts. The most important Stassfurt potassium minerals are: —

Sylvite — $KCl$
Kainite — $KCl, MgSO_4.3H_2O$
Carnallite — $KCl, MgCl_2.6H_2O$
Picromerite — $K_2SO_4, MgSO_4.6H_2O$

**378. Preparation and Properties.** — Potassium is prepared from potassium hydroxide by electrolysis. It was first obtained by this method in 1807 by Davy. Potassium is a soft, silver-white metal with a slight bluish tinge. It floats on water, the specific gravity being about 0.86. Its brilliant luster soon disappears in air, owing to rapid oxidation. Potassium as ordinarily seen is, therefore, covered with a grayish coating, and, like sodium, must be kept under mineral oil. It melts at 62.5° C., and at a higher temperature burns with a violet-colored flame. This color is characteristic of burning potassium, and is a **test for the metal and its compounds.** It interacts with water more energetically than sodium (see Fig. 5).

**379. Potassium Chloride,** $KCl$, is a white solid which crystallizes in cubes and otherwise resembles sodium chloride. It is found native in the Stassfurt deposits. Considerable is obtained by decomposing carnallite and crystallizing the potassium chloride from the solution of the more soluble magnesium chloride. It is used chiefly to prepare other potassium salts and as a fertilizer (**380, 383, 386**).

**380. Potassium Nitrate,** $KNO_3$, is also called **niter**

and **saltpeter.** It is formed in the soil of many warm countries by the decomposition of nitrogenous organic matter (**112**).

Potassium nitrate is a white solid. It dissolves easily in cold water with a marked fall of temperature, and very freely in hot water (Fig. 16). Unlike sodium nitrate it does not become moist in the air. It crystallizes readily, but contains no water of crystallization. The taste is salty and cooling. It melts at 333° C., and on further heating changes into **potassium nitrite** ($KNO_2$) and oxygen. At a high temperature, potassium nitrate gives up oxygen readily, especially to charcoal, sulphur, and organic matter. This oxidizing power leads to its extensive use in making gunpowder, fireworks, matches, explosives, and in many chemical operations. It is also used in salting meat.

Potassium nitrate is manufactured by mixing hot, concentrated solutions of sodium nitrate and potassium chloride. The equation for the reaction is —

$$\underset{\text{Sodium Nitrate}}{NaNO_3} + \underset{\text{Potassium Chloride}}{KCl} = \underset{\text{Potassium Nitrate}}{KNO_3} + \underset{\text{Sodium Chloride}}{NaCl}$$

The sodium chloride, being much less soluble than the potassium nitrate, separates and is removed by filtration. By evaporating the filtrate, crystals of potassium nitrate separate and are further purified by recrystallization. The solubility of these salts is shown in Fig. 16. (See Part II, Exp. **179.**)

**381.** **Gunpowder** is a mixture of potassium nitrate, charcoal, and sulphur. The proportions differ with the use of the powder. A common variety contains 75 per cent of potassium nitrate, 15 of charcoal, and 10 of sulphur. When gunpowder burns in a closed space, hot gases are suddenly formed. The pressure exerted by these gases forces the bullet from a gun and tears rocks to pieces. The chemical changes attending the explosion of gunpowder in a closed space are complex, as may be seen by the following (approximate) equation: —

$$16KNO_3 + 21C + 5S = 5K_2CO_3 + 13CO_2 + K_2SO_4$$

Potassium Nitrate, Carbon, Sulphur, Potassium Carbonate, Carbon Dioxide, Potassium Sulphate

$$+ 3CO + 2K_2S_2 + 8N_2$$

Carbon Monoxide, Potassium Disulphide, Nitrogen

The equation for the explosion when unconfined is much simpler, thus: —

$$2KNO_3 + 3C + S = 3CO_2 + N_2 + K_2S$$

Potassium Monosulphide

Gunpowder is being rapidly replaced by smokeless powders (**230**).

**382. Potassium Chlorate,** $KClO_3$, is a white, crystalline, lustrous solid. It melts at 370° C., and at a high temperature decomposes into oxygen and potassium chloride as final products. It is used to prepare oxygen, and in the manufacture of matches and fireworks. In the form of "chlorate of potash tablets" it is used as a remedy for sore throat.

Potassium chlorate is manufactured by the electrolysis of potassium chloride in a special apparatus which allows the two products — chlorine and potassium hydroxide — to mix and interact. The equation for the reaction is —

$$3Cl_2 + 6KOH = KClO_3 + 5KCl + 3H_2O$$

Chlorine, Potassium Hydroxide, Potassium Chlorate, Potassium Chloride, Water

Another process consists in preparing calcium chlorate and converting this into potassium chlorate by interaction with potassium chloride. The equations for the changes are —

$$6Ca(OH)_2 + 6Cl_2 = Ca(ClO_3)_2 + 5CaCl_2 + 6H_2O$$

Calcium Hydroxide, Calcium Chlorate, Calcium Chloride

$$Ca(ClO_3)_2 + 2KCl = 2KClO_3 + CaCl_2$$

**383. Potassium Carbonate,** $K_2CO_3$, is a white solid. It deliquesces in the air, is very soluble in water, and the solution, like that of sodium carbonate, has a strong alkaline reaction (**165, 367**). It was formerly obtained by treat-

THIS PAGE IS LOCKED TO FREE MEMBERS
Purchase full membership to immediately unlock this page

HISTORY

Tens of thousands of important historical sources, many previously unobtainable, are now available for the first time with a Forgotten Books Full Membership.

Unlimited Access
$8.99/month

Continue

*Fair usage policy applies

tables, and fruit contains potassium carbonate, which is formed from complex organic potassium compounds. Potassium salts taken from the soil by plants must be returned if the soil is to be productive. Sometimes crude kainite is used extensively as a **fertilizer** (**373**); wood ashes, or the sulphate and chloride, are often used to supply potassium salts.

**387. The Alkali Metals.** The properties of the metals are quite similar, and the chemical activity increases from lithium (at. wt. 6.94) to cæsium (at. wt. 132.81). All decompose water, yielding hydrogen and an hydroxide. The hydroxides are active bases, and the familiar ones long ago gave the name alkali to the family. Analogous compounds are much alike.

## Ammonium Compounds

**388. Introduction.** — Ammonium ($NH_4$) is a metallic radical, i.e. a group of elements which acts like an atom of a metal in chemical changes (**105**). Its most familiar compound is ammonium hydroxide ($NH_4OH$), which has the properties of a base and resembles sodium and potassium hydroxides (**99–105**). Other compounds of ammonium are analogous to the corresponding salts of sodium and potassium. Ammonium salts volatilize when heated. They also give off ammonia gas when heated with an alkali, such as calcium or sodium hydroxide (**99**). This reaction is a **test for ammonium compounds.**

**389. Ammonium Chloride,** $NH_4Cl$, is prepared by passing ammonia gas into dilute hydrochloric acid, by mixing ammonium hydroxide and hydrochloric acid, or by letting ammonia and hydrogen chloride mingle (**86**). The equation for the essential reaction is —

$$\underset{\text{Ammonia}}{NH_3} + \underset{\text{Hydrogen Chloride}}{HCl} = \underset{\text{Ammonium Chloride}}{NH_4Cl}$$

It is convenient to regard this compound as the ammonium salt of hydrochloric acid, as if it were formed by replacing the hydrogen of the acid by ammonium, just as sodium forms sodium chloride.

Ammonium chloride is a white, granular, fibrous, or crystalline solid, with a sharp, salty taste. It dissolves easily in water, and in so doing lowers the temperature markedly. (See Part II, Exp. **175.**)

Large quantities of ammonium chloride are made by liberating ammonia from the ammoniacal liquor obtained in gas works and passing the gas into hydrochloric acid (**205**). The crude product is often called "muriate of ammonia" to indicate its relation to muriatic (or hydrochloric) acid. It is largely used in charging Leclanché batteries, as an ingredient of soldering fluids, in galvanizing iron, and in textile industries. The crude salt is purified by heating it gently in a large iron or earthenware pot, with a dome-shaped cover; the ammonium chloride volatilizes easily and then crystallizes in the pure state as a fibrous mass on the inside of the cover, but the impurities remain behind in the vessel. This process of purification is called **sublimation** (**328**). The product is called a **sublimate.** Sublimed ammonium chloride is known as **sal ammoniac.**

**390. Ammonium Sulphate,** $(NH_4)_2SO_4$, is made by passing ammonia gas into sulphuric acid, or by adding ammonium hydroxide to the acid, thus: —

$$\underset{\text{Ammonium Hydroxide}}{2NH_4OH} + H_2SO_4 = \underset{\text{Ammonium Sulphate}}{(NH_4)_2SO_4} + 2H_2O$$

The commercial salt is a grayish or yellowish solid and is obtained in large quantities as a by-product of coal gas manufacture (**205**). It is used as an ingredient of fertilizers, since it is an inexpensive salt containing considerable nitrogen.

**391. Ammonium Nitrate,** $NH_4NO_3$, is made by passing ammonia into nitric acid, or by allowing ammonia gas and the vapor of nitric acid to mingle, thus: —

$$\underset{\text{Ammonia}}{NH_3} + \underset{\text{Nitric Acid}}{HNO_3} = \underset{\text{Ammonium Nitrate}}{NH_4NO_3}$$

It is a white salt which forms beautiful crystals. It dissolves easily in water with a fall of temperature. When gently heated it decomposes into nitrous oxide ($N_2O$) and water, and its chief use is in the preparation of nitrous oxide (**115**). (See Part II, Exp. **56.**)

**392. Ammonium Carbonate,** $(NH_4)_2CO_3$, is a white transparent solid when pure and fresh, but on exposure to air it loses ammonia and becomes opaque. It is used in some kinds of baking powder, to scour wool, as a medicine, and to prepare smelling salts (since it gives off ammonia readily).

## EXERCISES

**1.** Describe the manufacture of sodium by electrolysis.

**2.** Summarize the physical properties and chemical properties of sodium.

**3.** Discuss the manufacture of sodium carbonate by (*a*) the Leblanc process. (*b*) By the Solvay process.

**4.** What is (*a*) soda, (*b*) soda ash, (*c*) sodium carbonate, (*d*) soda crystals, (*e*) sal soda, (*f*) washing soda, (*g*) "alkali," (*h*) acid sodium carbonate, (*i*) saleratus, (*j*) baking powder, (*k*) baking soda, (*l*) caustic soda?

**5.** Describe the manufacture of sodium hydroxide.

**6.** What is a simple test for combined (*a*) sodium, and (*b*) potassium?

**7.** Describe the preparation of potassium nitrate.

**8.** Suggest an experiment to find the per cent of ammonium chloride in a mixture of sodium and ammonium chlorides.

## PROBLEMS

**1.** Calculate the weight of sodium in (*a*) 20 gm. of NaOH, (*b*) 35 gm. of $Na_2CO_3$, (*c*) 22 gm. of acid sodium sulphate, and (*d*) 18 gm. of sodium nitrate.

**2.** Calculate the weight of potassium in (*a*) 15 gm. of KCl, (*b*) 37 gm. of potassium carbonate, (*c*) 24 gm. of $KNO_3$, and (*d*) 45 gm. of potassium hydroxide.

**3.** Find the weight of ammonium in (*a*) 20 gm. of ammonium hydroxide, (*b*) 50 gm. of ammonium nitrate, (*c*) 60 gm. of ammonium sulphate, and (*d*) 170 gm. of sal ammoniac.

**4.** Write the formulas of the sodium, potassium, and ammonium salts of the following acids: chloric, phosphoric(ortho), sulphurous, hydrofluoric, carbonic, acetic, hydrobromic, dichromic, permanganic, manganic.

**5.** Indicate the ions in dilute aqueous solutions of (*a*) sodium hydroxide, (*b*) potassium nitrate, (*c*) sodium chloride, and (*d*) ammonium chloride.

THIS PAGE IS LOCKED TO FREE MEMBERS
Purchase full membership to immediately unlock this page

Get Smart

Over 2,000 years of human knowledge in 797,885 volumes

Instant access $8.99/month

Continue

*Fair usage policy applies

metallurgy. First, the valuable part of the ore is separated from the earthy or rocky impurities by crushing, washing, and mechanical separation; this preliminary treatment is called **concentration** and is often supplemented by operations which prepare the ore for chemical treatment. The next general step is the extraction of the metal in a more or less pure form from the concentrated and prepared ore. This operation usually consists in roasting the ore, and then, if necessary, heating the product with carbon (or some other reducing agent) and a flux, e.g. sand or limestone, which interacts with impurities and forms a fusible substance called **slag,** which can be easily separated and removed. The extraction of the metal by heating the ore is called **smelting.** Sometimes the metal is removed by dissolving agents. Other operations are often necessary and they vary with the ore and the metal.

Copper carbonates and oxides are reduced by heating them with coke in a suitable furnace. The general chemical change may be represented thus:—

$$\underset{\text{Copper Oxide}}{Cu_2O} + \underset{\text{Carbon}}{C} = \underset{\text{Copper}}{2Cu} + \underset{\text{Carbon Monoxide}}{CO}$$

The smelting of copper-iron sulphides is complicated. After concentration and roasting, the mass is smelted with coal and sand in a furnace. This operation converts much of the sulphur into sulphur dioxide and most of the iron into a fusible iron silicate, which is removed as slag. The remaining **matte,** as it is called, which contains from 35 to 50 per cent of copper, besides iron, sulphur, silver, and gold, must be further treated to obtain the copper. In some cases it is roasted and melted until all the iron is removed and mainly copper sulphide remains; this

mass is finally roasted to convert it partly into an oxide, and the mixture of sulphide and oxide is again melted; the sulphur passes off as sulphur dioxide, and the copper is left behind. The equation for this final change is —

$$\underset{\text{Copper Oxide}}{2CuO} + \underset{\text{Copper Sulphide}}{Cu_2S} = \underset{\text{Copper}}{4Cu} + \underset{\text{Sulphur Dioxide}}{SO_2}$$

Usually the matte is melted and poured into a barrel-shaped vessel, called a **converter,** lined with silica and provided with holes near the bottom. Air is blown through the liquid, thereby removing the remaining sulphur and iron as sulphur dioxide and slag and leaving the copper nearly pure. The metal, which is about 98 per cent pure, is poured into anode molds, and subsequently sent to the refinery.

**396. Refining of Copper by Electrolysis.** — Since very pure copper is needed for many purposes, especially in electrical industries, the **blister copper,** as it is called, which is prepared by the process described above, must be further purified. This is done by electrolysis, and the refined metal, which is exceedingly pure, is called **electrolytic copper.**

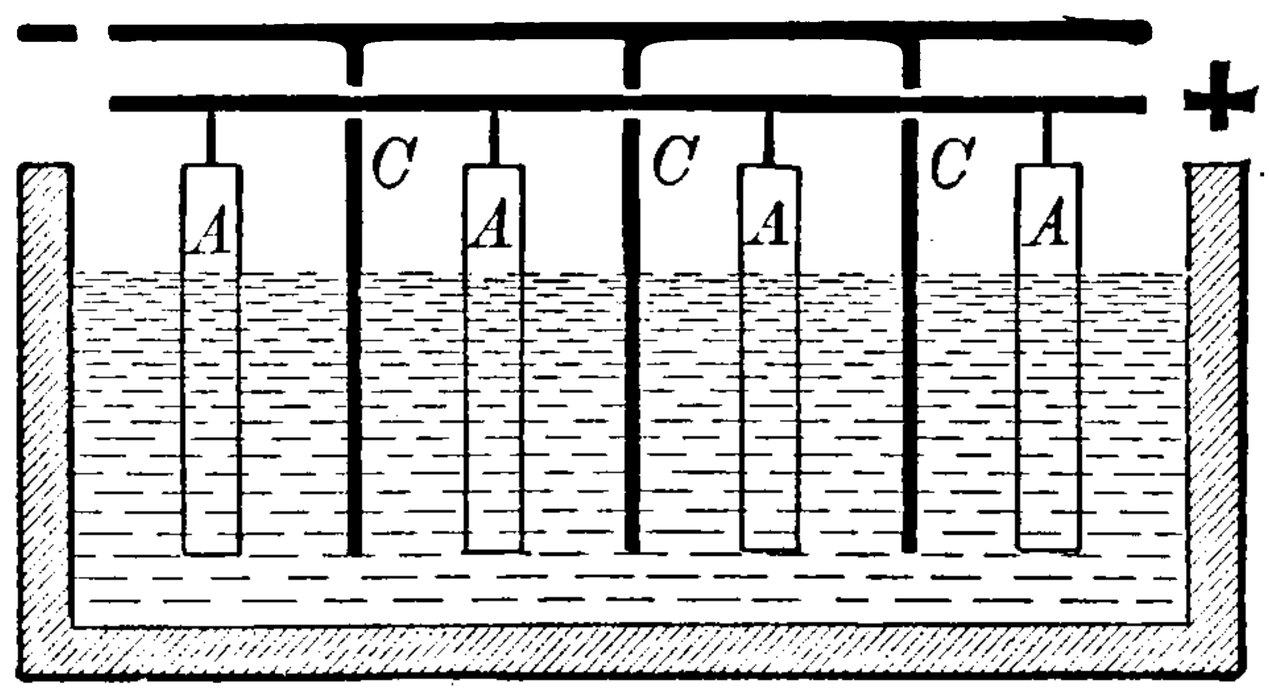


Fig. 81. — Apparatus for the Preparation of Pure Copper by Electrolysis. A, A, A are Anodes, and C, C, C are Cathodes.

The anodes are suspended in a solution of copper sulphate. Sheets of pure copper are made cathodes and dip into the solution, as shown in Fig. 81. When the current passes, pure copper dissolves from the anodes and deposits upon the cathodes, the impurities either remaining in solution or falling to the bottom of the cell as a slime;

from this slime the gold and silver that were in the copper ore are extracted. In terms of the theory of electrolytic dissociation, copper ions ($Cu^{++}$) migrate to the cathode, lose their charges, and become metallic copper (**166**).

**397. Properties of Copper.** — Copper is distinguishable from all other metals by its peculiar reddish color. It is flexible, ductile, malleable, and tough. It melts at 1083° C. Its specific gravity is 8.9. Copper is an excellent conductor of electricity, the pure metal being next to silver in this respect. Exposed to dry air, it turns dull, and in moist air it gradually becomes coated with a greenish copper carbonate. Heated in the air, it is changed into black copper oxide (CuO), and at a high temperature it colors a flame emerald-green. With nitric acid it forms copper nitrate and oxides of nitrogen (**112**); with hot sulphuric acid it yields copper sulphate and sulphur dioxide (**277**). Hydrochloric acid has little effect upon it. Copper displaces some metals if suspended in solutions of their compounds, e.g. a clean copper wire, if placed in a solution of any mercury compound, soon becomes coated with mercury; on the other hand, metals like iron, zinc, and magnesium displace copper from its solution, e.g. a nail or knife blade soon becomes coated with copper if dipped into a solution of any copper compound. Scrap iron is often used to precipitate copper on a large scale. (See **414.**) (See Part II, Exps. **181, 184.**)

**398. Tests for Copper.** — The reddish color, peculiar "coppery" taste, and green color imparted to a flame serve to identify metallic copper. An excess of ammonium hydroxide added to a solution of a copper compound produces a beautiful deep blue solution. A few drops of acetic acid and potassium ferrocyanide solution added to a dilute solution of a copper compound produce a brown precipitate of copper ferrocyanide ($Cu_2Fe(CN_6)$. (See Part II, Exp. **182.**)

THIS PAGE IS LOCKED TO FREE MEMBERS
Purchase full membership to immediately unlock this page

HISTORY

Tens of thousands of important historical sources, many previously unobtainable, are now available for the first time with a Forgotten Books Full Membership.

Unlimited Access
$8.99/month

Continue

*Fair usage policy applies

oxide is $Cu_2O$ and cupric oxide $CuO$. The valence of copper is I in cuprous compounds and II in cupric. Soluble copper compounds are more or less poisonous. Cooking utensils made of copper should be used with care. Vegetables, acid fruits, and preserves, if boiled in them, should be removed as soon as cooked. The vessels themselves should be kept bright, to prevent the formation of copper salts, which might contaminate the contents.

**401. Copper Sulphate** or **Cupric Sulphate,** $CuSO_4$, is a blue solid, and is called **blue vitriol** or "blue stone." The crystallized salt ($CuSO_4.5H_2O$) effloresces; heated to 240° C., all the water escapes, leaving a whitish powder called **anhydrous copper sulphate.** Copper sulphate solutions have an acid reaction owing to hydrolysis (**165**). Copper sulphate is used in electric batteries, in making other copper salts, in calico printing, dyeing, copper plating and electrotyping. It is poisonous and is one ingredient of certain mixtures, such as Bordeaux mixture, which are sprayed upon trees to kill insects. Copper sulphate may be prepared by treating copper with sulphuric acid or by oxidizing copper sulphide. Both methods are used. Some of the copper sulphate of commerce is a by-product obtained in refining gold and silver with sulphuric acid.

**402. Other Copper Compounds.** — **Cuprous oxide** ($Cu_2O$) is the red mineral cuprite. It is precipitated as a reddish powder by heating Fehling's solution (i.e. a mixture of solutions of copper sulphate, Rochelle salt, and sodium hydroxide) with glucose; its formation serves as a test for glucose and sugars like it (**223**). **Cupric oxide** ($CuO$) is a black solid formed by heating copper in air. It is used to remove sulphur compounds from petroleum. **Copper nitrate,** $Cu(NO_3)_2$, is a blue, crystallized solid, formed by the interaction of copper and dilute nitric acid. It is a cupric salt. It is deliquescent, very soluble in water, and is readily decomposed by heat into cupric oxide ($CuO$) and oxides of nitrogen. **Cuprous sulphide,** $Cu_2S$, is

the bluish black mineral chalcocite. **Cupric sulphide,** CuS, is the black precipitate formed by passing hydrogen sulphide gas into a solution of a cupric salt. **Malachite** is a bright green mineral and is often used as an ornamental stone. **Azurite** is a magnificent blue, crystallized mineral. Both are basic carbonates and are ores of copper (**394**).

## Silver

**403. Occurrence of Silver.** — Native silver is sometimes found as flakes or wire in certain kinds of rock. The chief **ores** are the sulphides. The simple sulphide (silver glance, argentite, $Ag_2S$) is the richest ore and is found in many localities in the United States; complex ores containing antimony are widely distributed. Small quantities of native silver chloride (horn silver, cerargyrite, AgCl) are also found; it resembles wax or horn, and melts in a candle flame. Alloys of silver with gold and copper are found, average California gold containing about 12 per cent silver. Most ores of lead and copper contain silver, and this argentiferous (or silver-bearing) ore is one of the chief sources of silver.

**404. Metallurgy of Silver.** — Silver is extracted from its ores by two principal processes. Ores containing free silver or silver compounds that can be easily changed into free silver are treated by the **amalgamation process.** The powdered ore is first changed into silver chloride by roasting it with sodium chloride. The mass is then reduced to silver by agitation with water and iron (or an iron compound); the simplest equation for this reaction is —

$$\underset{\text{Silver Chloride}}{2AgCl} + \underset{\text{Iron}}{Fe} = \underset{\text{Silver}}{2Ag} + \underset{\text{Iron Chloride}}{FeCl_2}$$

The silver is removed by adding mercury, which forms an amalgam with the silver, but not with the other

substances. When the amalgam is heated, the mercury distils off and the silver — with some gold — remains behind. Lead ores containing silver are treated by the **Parkes process.** After the sulphur, arsenic, and other impurities have been removed from the lead ores by roasting, the final mixture of lead, silver, and gold is melted with about 1 per cent of zinc. As the mixture cools, an alloy of silver, gold, zinc, and a little lead rises to the surface, solidifies, and is skimmed off. This process is repeated several times. The skimmings are heated in a retort to remove the zinc and then in a shallow furnace to remove the lead. The alloy of silver and gold left in the furnace can be separated by two processes. In the older process the alloy is boiled with concentrated sulphuric acid; the gold is not acted upon, but the silver forms soluble silver sulphate. The silver is displaced from the solution by metallic copper, the latter forming copper sulphate (**401**). In the newer process silver is refined by electrolysis in much the same way as copper; the solution used is silver nitrate in nitric acid (**396**).

**405. Properties of Silver.** — Silver is a lustrous, white metal. It is harder than gold, but softer than copper. Like copper, it is ductile and malleable, and may be easily made into various shapes. Silver has a specific gravity of about 10.5, being heavier than copper, but lighter than lead. It melts at about 960° C. Silver conducts electricity the best of all the metals, but it is too expensive for general use. It does not tarnish in air unless sulphur compounds are present, and then the familiar black film of silver sulphide is produced. This blackening is especially noticed on silver spoons which have been put into eggs or mustard, and on silver coins which have been carried in the pocket, the sulphur in the latter case coming from sulphur com-

THIS PAGE IS LOCKED TO FREE MEMBERS
Purchase full membership to immediately unlock this page

Get Smart

Over 2,000 years of human knowledge in 797,885 volumes

Instant access $8.99/month

Continue

*Fair usage policy applies

of potassium silver cyanide; the anode is a plate of pure silver (Fig. 82). When the electric current is passed the silver dissolves from the anode and deposits upon the cathode. The deposit of silver is dull, but can be brightened by rubbing.

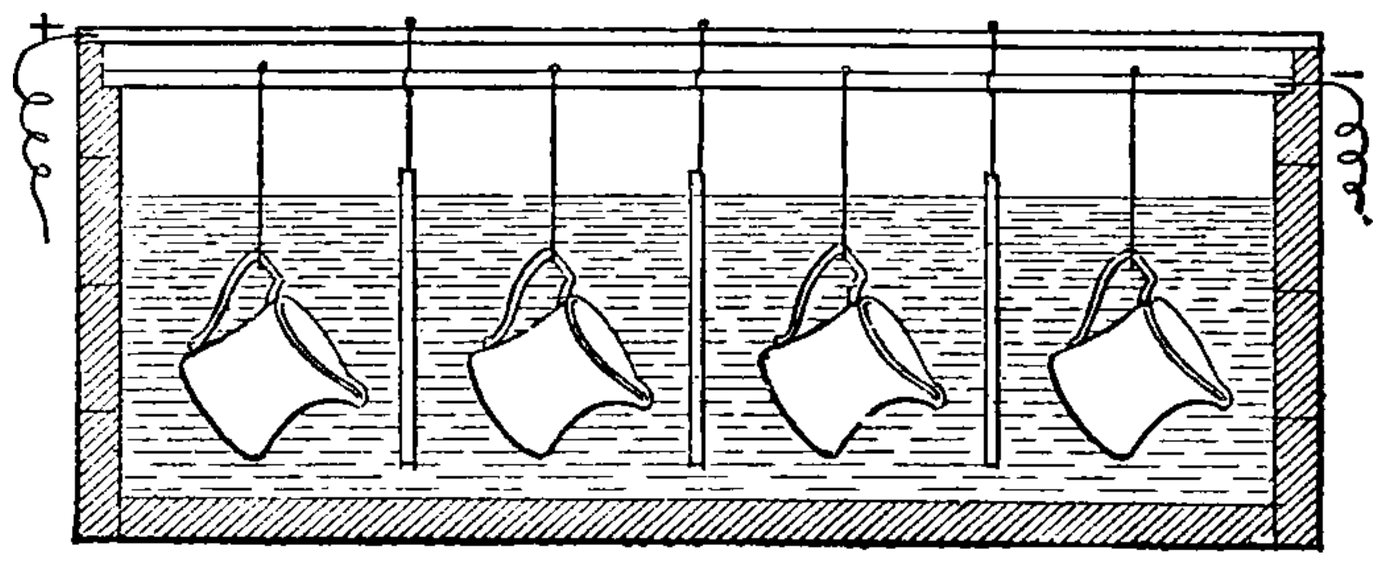


Fig. 82. — Apparatus for Silver Plating.

**408. Compounds of Silver.** — The most important compound is **silver nitrate** ($AgNO_3$). It is a white crystalline solid, made by dissolving silver in nitric acid, the equation for the reaction being —

$$\underset{\text{Silver}}{3Ag} + \underset{\text{Nitric Acid}}{4HNO_3} = \underset{\text{Silver Nitrate}}{3AgNO_3} + \underset{\text{Nitric Oxide}}{NO} + \underset{\text{Water}}{H_2O}$$

It is very soluble in water. It turns dark in contact with organic matter owing to its reduction to metallic silver. For this reason it blackens the skin; if applied long enough, it disintegrates the flesh, and is often used by physicians for this purpose. Silver nitrate is the essential substance used in making indelible inks; the cloth to which the ink is applied reduces the silver compound to black metallic silver. **Silver chloride** ($AgCl$) is made by adding hydrochloric acid or the solution of any chloride to a solution of a silver compound. Thus formed, it is a white, curdy solid, which turns violet in the light and finally black. It is converted by ammonium hydroxide into a soluble complex compound ($Ag(NH_3)_2Cl$). The formation and properties of silver chloride constitute the **test for silver.** **Silver bromide** ($AgBr$) and **silver iodide** ($AgI$) are analogous to silver chloride in their properties and methods of formation; they are used in photography.

**409. Photography** is based mainly on the fact that silver salts, especially the bromide and iodide, darken when exposed to the light.

The photograph is taken on a glass plate, coated on one side with a thin layer of gelatin containing very finely divided silver bromide. Sometimes a sheet of sensitized celluloid, called a film, is used. The plate or film is exposed in the camera. The light that comes from the object being photographed changes the silver salt in proportion to its intensity. The exposed plate, however, shows no change until it is developed. This process consists in immersing the plate in a solution of a reducing agent, e.g. hydroquinone, pyrogallic acid, or special mixtures. As the developer acts upon the silver salt on the plate, the image appears. This is really a deposit of finely divided silver which varies in thickness in proportion to the light that fell upon the plate, being thickest where the light was most intense. After the plate has been properly developed, it still contains some silver salt not altered by the light; and if the salt were left on the plate, the image would be clouded and finally obliterated by the light. The image is, therefore, fixed by dissolving the silver salt with a solution of sodium thiosulphate (or "hyposulphite") and washing the plate thoroughly. On the fixed plate the dark parts of the object appear light and the light parts dark; and since the image is the reverse of the object, the plate in this condition is called a negative. The print is made by laying sensitized paper upon the negative and exposing to the sunlight, so that the light must pass through the negative first. Since the negative obstructs the light in proportion to the thickness of the silver deposit, the photograph will have approximately the same shading as the object. On some kinds of paper the image appears at once, but on others it must be developed. Subsequent treatment involves fixing.

## Gold

**410. Occurrence.** — Gold is widely distributed, but not abundantly in many places. Unlike copper and silver, its compounds are few and rare; the only important ones are the tellurides (compounds of tellurium, e.g. ($AuAgTe_2$) found in Colorado. It is never found pure, being alloyed with silver and occasionally with copper or iron (**403**). It is disseminated in fine, almost invisible, particles among ores of other metals, though not so abundantly as silver.

Much gold is found in veins of quartz, and in the sand formed by the disintegration of gold-bearing rocks.

The chief gold-producing countries are the United States, Australia, South Africa, and Russia. The United States produces annually over four million troy ounces, which come largely from Colorado, California, and Alaska.

**411. Mining, Metallurgy, and Refining.** — Gold is sometimes mined by washing the gold-bearing sand in large pans or cradles. In placer mining and hydraulic mining streams of water wash away the lighter materials, but leave the heavier gold behind. From this mixture, gold and silver are extracted with mercury. In vein or quartz mining the lumps of gold-bearing quartz are crushed to a fine powder in stamp mills; the moistened mass is passed over copper plates coated with mercury which collects or dissolves the gold and other metals. The amalgam is heated, as in the metallurgy of silver, to remove the mercury, and the gold is extracted from the residue (**404**). In the **chlorination process** the crushed ore is roasted and then treated with chlorine or with bleaching powder and sulphuric acid; this operation forms a soluble gold chloride ($AuCl_3$), from which the gold is precipitated as a fine powder by ferrous sulphate or other reducing agents. In the **cyanide process** the crushed ore, or the slime from a previous extraction, is mixed with a weak solution of potassium cyanide and exposed to the air; this operation changes the gold into a soluble cyanide, the equation for the reaction being —

$$\underset{\text{Gold}}{4Au} + \underset{\text{Potassium Cyanide}}{8KCN} + \underset{\text{Oxygen}}{O_2} + \underset{\text{Water}}{2H_2O} = \underset{\text{Gold Potassium Cyanide}}{4KAu(CN)_2} + \underset{\text{Potassium Hydroxide}}{4KOH}$$

The gold is separated from this solution by electrolysis or by treatment with zinc.

**Refining** is accomplished by parting or by electrolysis. By the old parting process known as **quartation** an alloy of gold and silver, in which the gold is about one fourth of the whole, is treated with nitric acid; this operation changes the silver into the nitrate from which the pure gold may be readily removed. The metals may be parted by the method described under silver, viz. by boiling with concentrated sulphuric acid. By this treatment the silver is dissolved and the gold, which is about one sixth of the alloy, is left as a

THIS PAGE IS LOCKED TO FREE MEMBERS
Purchase full membership to immediately unlock this page

HISTORY

Tens of thousands of important historical sources, many previously unobtainable, are now available for the first time with a Forgotten Books Full Membership.

Unlimited Access
$8.99/month

Continue

*Fair usage policy applies

purple precipitate; the latter is called "purple of Cassius," and is finely divided gold. Its formation is the **test for gold.** The process of **gold plating** is the same as silver plating; the solution contains a potassium gold cyanide ($KAu(CN)_2$ or $KAu(CN)_4$) and the anode is gold. Much cheap jewelry is gold plated.

**414. Displacement of Metals.** — The deposition of metallic copper and the displacement of mercury by copper itself (**397**) are examples of a kind of chemical change in which most metals can participate. The displacing relations of metals, so to speak, have been carefully studied and the familiar metals can be arranged in a series called the —

ELECTROCHEMICAL SERIES OF THE METALS

| | | |
|---|---|---|
| Magnesium | Cobalt | Copper |
| Aluminium | Nickel | Mercury |
| Zinc | Tin | Silver |
| Cadmium | Lead | Platinum |
| Iron | Hydrogen | Gold |

In this series each free metal displaces succeeding metals from their solutions, and is in turn displaced from its solutions by preceding metals. For example, zinc (except when very pure), being near the beginning, displaces most of the metals in the series, while copper, being near the end, displaces only a few.

Hydrogen is not a metal in the common acceptance of this term, but it is usually included in the electrochemical series of the metals, because all the metals that precede hydrogen displace it from most acids, while those that follow do so rarely, if at all. That is, hydrogen behaves in this respect like other members of the series.

## EXERCISES

**1.** Describe the refining of copper by electrolysis.

**2.** State the physical properties of copper that fit it for electrical uses.

**3.** Describe several tests for copper.

**4.** Name eight alloys of copper. State the uses of three.

**5.** Describe the extraction of silver by (*a*) the amalgamation process and (*b*) the Parkes process.

**6.** Describe the process of (*a*) silver plating and (*b*) gold plating.

**7.** Describe briefly the essential operations in photography.

**8.** What is (*a*) blue vitriol, (*b*) argentiferous lead, (*c*) oxidized silver, (*d*) sterling silver, (*e*) coin silver, (*f*) lunar caustic, (*g*) "hypo," (*h*) fool's gold, (*i*) gold leaf?

**9.** How is gold purified? What is 18 carat gold?

**10.** Practical topics: (*a*) If silver cost only ten cents a pound, for what could it be used? (*b*) Why is gold "valuable"? (*c*) A "tin" can will displace copper from copper solutions. Why? (*d*) Why are the sparks from a trolley wire colored green? (*e*) Nitric acid produces a blue stain on a silver coin. Why? (*f*) A 2 carat diamond is set in an 18 carat gold ring. Explain.

## PROBLEMS

**1.** Calculate the weight of copper in (*a*) 10 gm. of crystallized copper sulphate, (*b*) 1 metric ton of malachite, and (*c*) 2000 lb. of chalcocite.

**2.** Calculate the weight of (*a*) silver in 1 kg. of silver nitrate and (*b*) of gold in 1 gm. of potassium auricyanide ($KAu(CN)_4$).

**3.** Calculate the percentage composition of the two copper oxides and show that they illustrate the law of multiple proportions. (Use exact atomic weights.)

**4.** Write the formulas of the following compounds by applying the principle of valence: Silver sulphide, silver hydroxide, silver oxide, cupric bromide, cuprous chloride, cupric cyanide, auric oxide, aurous bromide, auric chloride, silver acetate, cuprous oxide, cupric sulphate, cuprous iodide, silver nitrate, aurous oxide, auric sulphide, silver orthophosphate. Calculate the per cent of the metal in five of these compounds.

**5.** Calculate the simplest formulas corresponding to the following analyses: (*a*) Cu = 96.72, H = 3.82 ; (*b*) Cu = 57.46, H = 0.91, O = 36.2, C = 5.43; (*c*) Ag = 87.09, S = 12.9; (*d*) Au = 64.81, Cl = 35.09.

**6.** How many grams of gold in a 14 carat ring which weighs 14 gm.?

**7.** How much (*a*) silver and (*b*) copper can be obtained from an American ten cent coin which weighs 2.44 gm.?

**8.** Complete and balance the equation $CuSO_4 + H_2S = CuS + ——$. How much CuS can be obtained from 24 gm. of $CuSO_4$?

# CHAPTER XXVI

## CALCIUM — STRONTIUM AND BARIUM

These elements form a natural family called the **alkaline earth metals.**

### Calcium

**415. Occurrence of Calcium.** — Calcium is never found free. Combined calcium makes up about 3.5 per cent of the earth's crust. The most abundant compound is calcium carbonate ($CaCO_3$). Many rocks are complex silicates of calcium and other metals. The extensive deposits of calcium phosphate and calcium borate have been mentioned. Calcium sulphate ($CaSO_4$) also occurs abundantly. Calcium compounds are essential to the life of plants and animals, being found in the leaves of plants, and in the bones, teeth, and shells of animals. Many rivers and springs contain calcium salts, especially the acid carbonate and sulphate (**417, 423**).

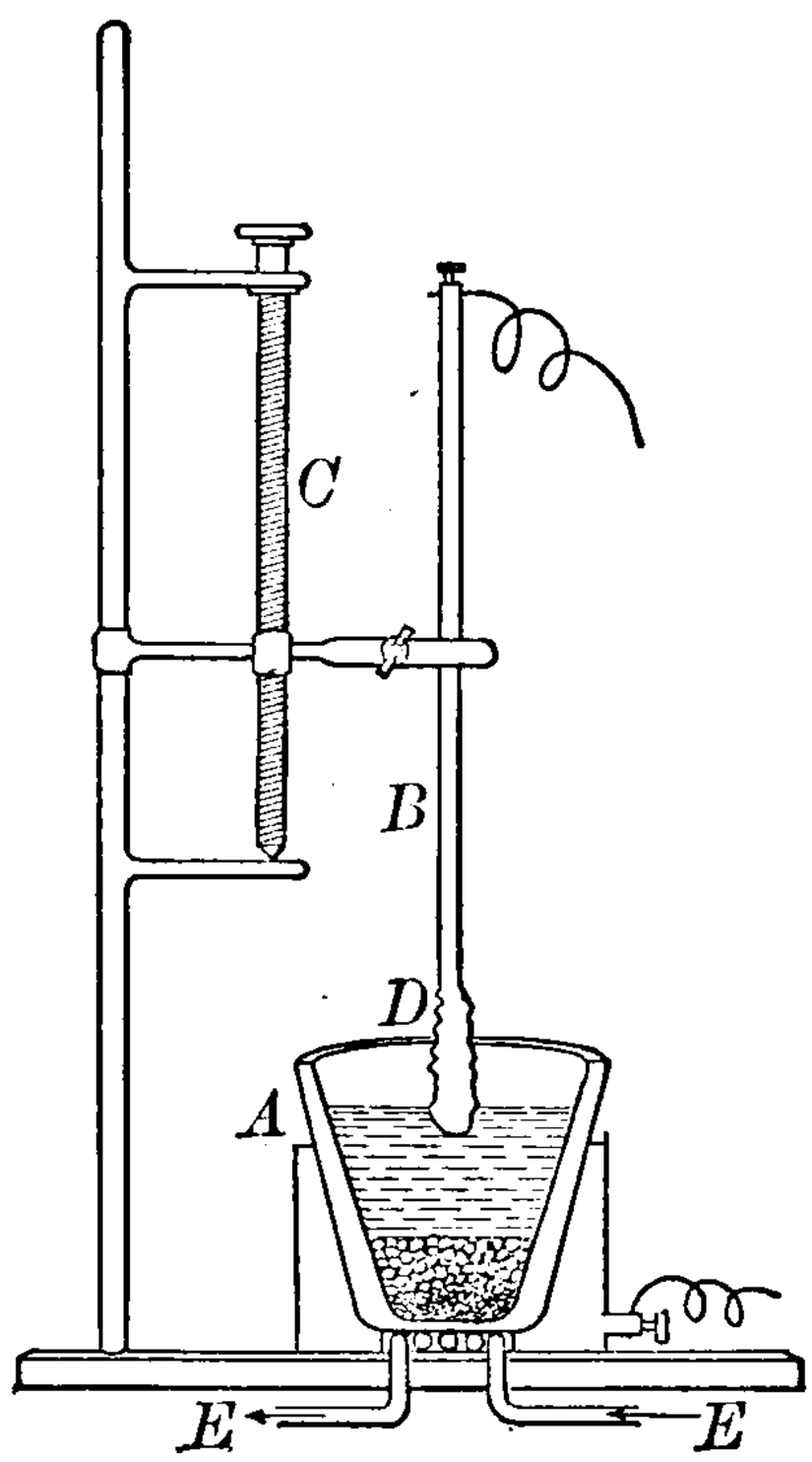


Fig. 83. — Apparatus for Preparing Calcium by Electrolysis.

**416. Preparation and Properties.** — Metallic calcium is prepared by the electrolysis of melted calcium chloride. One form of apparatus is shown in Fig. 83. The anode is a graphite crucible (A) and the cathode is a rod of iron (B), which dips into the melted calcium chloride a short distance and is so adjusted that it can be elevated by a screw (C). The lower part of the crucible, which is kept cool by running water

THIS PAGE IS LOCKED TO FREE MEMBERS
Purchase full membership to immediately unlock this page

Get Smart

Over 2,000 years of human knowledge in 797,885 volumes

Instant access $8.99/month

Continue

*Fair usage policy applies

($H_2Ca(CO_3)_2$) (**188**). As this water works its way underground in limestone regions the limestone is dissolved and caves are often formed or enlarged. When the water enters a cave and drips from the top, the acid calcium carbonate decomposes and calcium carbonate is redeposited, often forming **stalactites** and **stalagmites.** The stalactites hang from the roof like icicles, and are often exquisitely shaped; the stalagmites, which grow up from the floor, sometimes meet the stalactites and form a column. **Mexican onyx** is a variety of stalagmite. Vast deposits of this beautiful mineral are found in Algeria and Mexico. It is translucent and delicately colored, and is used as an ornamental stone, especially for altars, table tops, mantels, and lamp standards. **Travertine** occurs near many springs in Italy. When fresh, it is soft and porous, but it soon hardens and becomes a durable building stone in dry climates. A portion of the walls of the Colosseum and St. Peter's is travertine.

Limestone often contains shells and fossils, confirming the belief that limestone is the remains largely of the shells of animals. The calcium carbonate dissolved in the ocean is transformed by marine organisms into shells and bony skeletons. The hard parts of these animals accumulate in vast quantities on the ocean bottom, become compact, often hardened and crystallized, and subsequently form a part of the land. On the coast of Florida, **coquina** or shell rock is found. It is a mass of fragments of shells cemented by calcium carbonate, and in time will become compact limestone. **Chalk** is the remains of shells of minute animals. When examined under a microscope, a good specimen is seen to consist almost entirely of tiny shells.

**418. Calcium Oxide,** CaO, is the familiar substance **lime.** It is a hard, white solid. Pure lime is almost infusible, and when heated in the oxyhydrogen flame, it gives an intensely bright light, sometimes called the lime light (**26**). In the intense heat of the electric furnace it melts and boils. Lime containing impurities, like sand, clay, and iron compounds, melts quite readily into a glass or slag. Exposed to the air, lime becomes "air slaked," i.e. it slowly absorbs water and carbon dioxide, swells, and soon crumbles to a powder, which is a mixture of cal-

cium hydroxide and calcium carbonate. Lime and water combine readily; considerable heat is liberated, as is often seen when mortar is being prepared. This operation is called "slaking," and the product is "slaked lime." The equation for the reaction is —

$$\underset{\text{Calcium Oxide}}{CaO} + \underset{\text{Water}}{H_2O} = \underset{\text{Calcium Hydroxide}}{Ca(OH)_2} + 15{,}540 \text{ calories}$$

Sometimes water leaks into cars or buildings in which lime is stored and the heat evolved causes a serious fire.

Lime is used in preparing mortar, cement, and metals, in making bleaching powder, calcium carbide, sodium hydroxide, and glass, in purifying illuminating gas and sugar, in removing hair from hides, in dyeing and bleaching cotton cloth, and as a disinfectant and fertilizer.

Lime is manufactured by heating limestone in a partly closed cavity or vessel. The decomposition takes place according to the equation —

$$\underset{\text{Calcium Carbonate}}{CaCO_3} = \underset{\text{Calcium Oxide}}{CaO} + \underset{\text{Carbon Dioxide}}{CO_2}$$

The carbon dioxide gas escapes and the lime is left in the kiln.

Limestone was formerly "burned" in a cavity on a hillside, and in some regions it is so prepared to-day. An arch of limestone is built across the cavity above the fire pit, and limestone is introduced until the kiln is full. These kilns are being replaced by modern kilns (Fig. 85), which are constructed so that the heat can be regulated (at B, B), the gases swept out, the raw material introduced (at A), and the product removed continuously (at C, C).

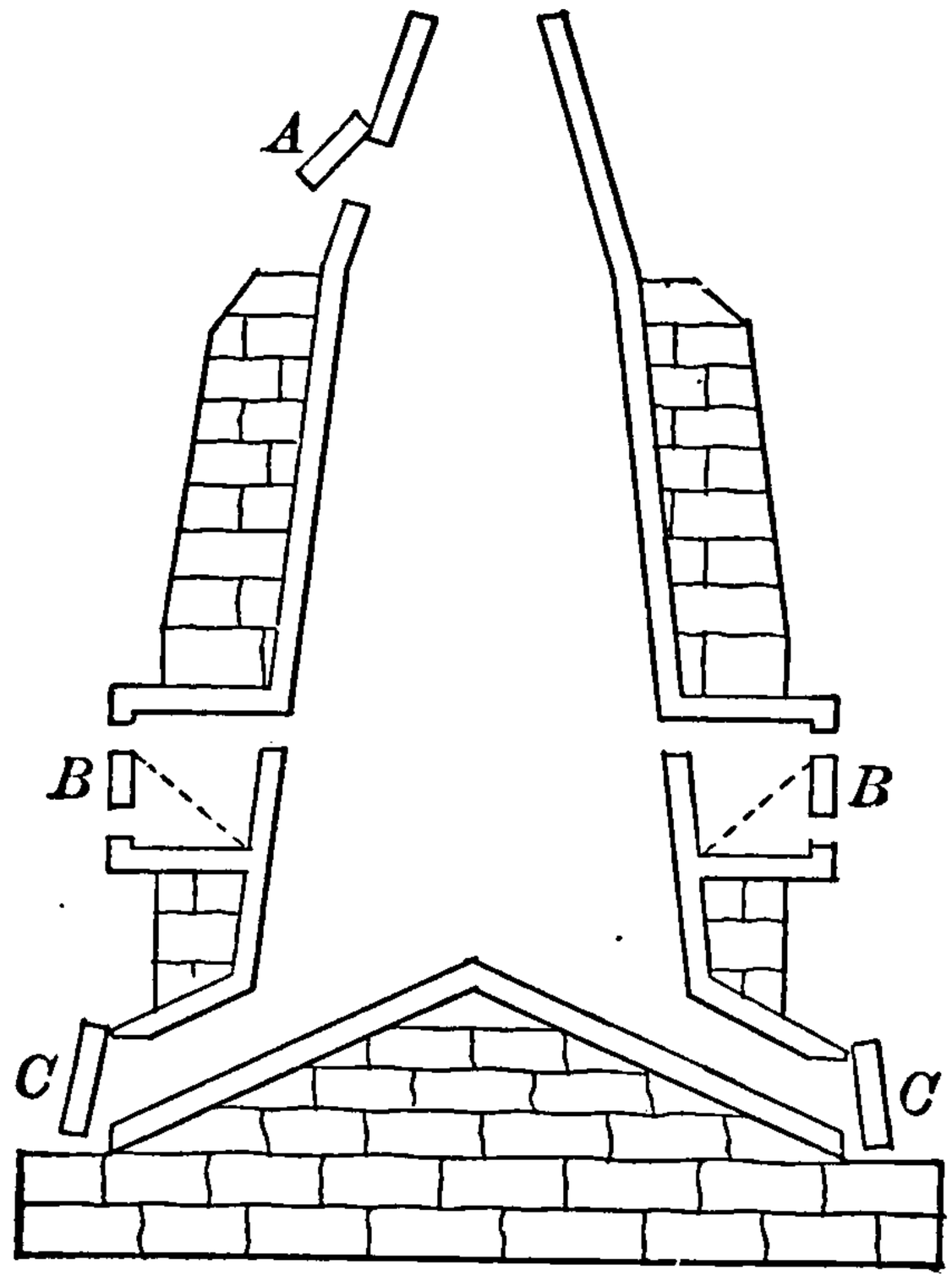

Fig. 85. — Continuous Limekiln.

**419. Cement.** — Pure or nearly pure limestone yields a product called quicklime (or simply lime) because it acts quickly with water in contrast with lime which is impure or partly slaked. Limestone containing about 10 per cent of clay and silica yields a mixture of calcium silicate and aluminate besides lime. Unlike quicklime it slakes very slowly and hardens under water as well as in air. It is therefore called **hydraulic lime.** Hydraulic lime is intermediate between lime and cement. **Cement** is made from natural or artificial mixtures of limestone, clay, sand, and iron oxide. **Portland cement** is manufactured by heating the pulverized, carefully proportioned mixture in long rotatory kilns (Fig. 86). The mixture enters at C and gradually works its way along through the slowly rotating kiln against the flames and hot gases produced by burning coal dust, which is forced into the kiln at A by a powerful air blast. The mixture interacts and forms a semifused, gray-black mass called clinker, which drops out at B, and is subsequently ground to a very fine powder. Ground gypsum is often added. A mixture of cement, sand, water, and crushed stone is known as **concrete,** which, as well as cement itself, is now extensively used as a construction material. Sometimes concrete is strengthened by imbedding rods of iron or steel in it, and it is then called re-enforced concrete. (See Part II, Exp. **197**.)

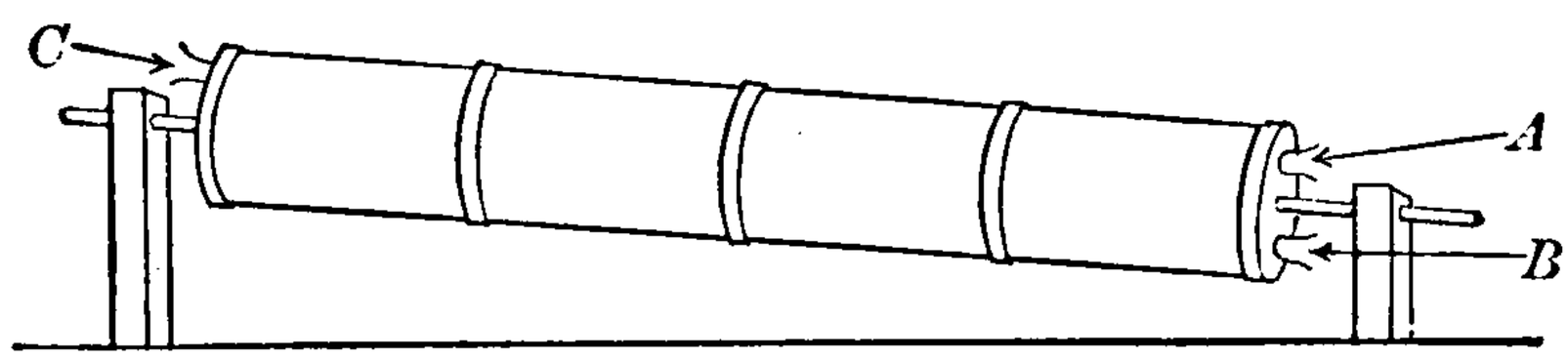

Fig. 86. — Cement Kiln.

**420. Calcium Hydroxide,** $Ca(OH)_2$, is a white powder. It is sparingly soluble in water, but more soluble in cold than in warm water. The solution has a bitter taste and

THIS PAGE IS LOCKED TO FREE MEMBERS
Purchase full membership to immediately unlock this page

HISTORY

Tens of thousands of important historical sources, many previously unobtainable, are now available for the first time with a Forgotten Books Full Membership.

Unlimited Access
$8.99/month

Continue

*Fair usage policy applies

which consists of a network of very small crystals. The equation for the setting of plaster of Paris may be written —

$$\underset{\text{Plaster of Paris}}{(CaSO_4)_2.H_2O} + \underset{\text{Water}}{3H_2O} = \underset{\text{Gypsum}}{2(CaSO_4.2H_2O)}$$

Plaster of Paris is used to coat plastered walls, to cement glass to metal, but more largely to make casts and reproductions of statues and small objects. **Stucco** is essentially a mixture of glue and plaster of Paris.

**423. Calcium Compounds and Hardness of Water.** — Calcium sulphate is slightly soluble in water, and calcium carbonate, as we have already seen, is changed into a soluble acid carbonate by water containing carbon dioxide. Water containing these and other dissolved salts of calcium is called **hard water.** They form sticky, insoluble compounds with soap, and as long as water contains such salts, the soap is useless as a cleansing agent. Moreover hard water if used in boilers forms deposits on the inside of the boiler, thereby causing waste of heat; in some cases acids are liberated which corrode the boiler. Heat decomposes acid calcium carbonate, and the hardness due to acid calcium carbonate is called **temporary hardness,** because boiling removes it. Temporary hardness can also be removed by adding enough calcium hydroxide to change the acid calcium carbonate into normal calcium carbonate. Boiling does not affect calcium sulphate, and water containing this salt is said to have **permanent hardness.** Magnesium sulphate and chloride, like the corresponding calcium salts, produce permanent hardness. Permanently hard water can be softened, however, by adding sodium carbonate, which converts the calcium and magnesium salts into insoluble carbonates, thus: —

$$\underset{\text{Calcium Sulphate}}{CaSO_4} + \underset{\text{Sodium Carbonate}}{Na_2CO_3} = \underset{\text{Calcium Carbonate}}{CaCO_3} + \underset{\text{Sodium Sulphate}}{Na_2SO_4}$$

(See Part II, Exp. **199**.)

**424. Calcium Chloride,** $CaCl_2$, is a white solid. It absorbs moisture, and is used to dry gases and liquids (**51**). Calcium chloride is found in small quantities in some of the Stassfurt salts (**377**). It is a by-product in the manufacture of sodium carbonate by the Solvay process (**366**). A solution of calcium chloride is used as a brine in the manufacture of ice (**104**).

**425. Other Calcium Compounds.** — Important calcium compounds already described are the fluoride, carbide, phosphates, and hypochlorite. **Calcium sulphide** (CaS) is formed by reducing calcium sulphate with carbon; like other sulphides, it stains silver brown. **Calcium oxalate** ($CaC_2O_4$) is a white solid formed by the interaction of ammonium oxalate and a dissolved calcium compound; it is insoluble in acetic acid but soluble in hydrochloric acid. Its formation and properties serve as a **test for calcium.** Another test for calcium is the light red color imparted to the Bunsen flame. **Calcium nitrate** ($Ca(NO_3)_2$) and **calcium cyanamide** ($CaN_2C$) are made from the nitrogen of the atmosphere and are used as **fertilizers** because they provide nitrogen in a form easily taken up by plants. The commercial substances are dark solids. For the nitrate see **106.** The cyanamide is made by passing nitrogen over very hot calcium carbide, the equation for the reaction being —

$$\underset{\text{Nitrogen}}{N_2} + \underset{\text{Calcium Carbide}}{CaC_2} = \underset{\text{Calcium Cyanamide}}{CaN_2C} + \underset{\text{Carbon}}{C}$$

## Strontium and Barium

**426. Strontium,** Sr, and **Barium,** Ba, are uncommon metallic elements. The metals themselves never occur free, and are hardly more than chemical curiosities. Their compounds resemble those of calcium; some are useful.

**427. Compounds of Strontium.** — The important native compounds are the beautifully crystallized minerals, **strontianite** (strontium carbonate, $SrCO_3$) and **celestite** (strontium sulphate, $SrSO_4$). **Strontium oxide** (strontia, SrO), like lime, is made by heating the carbonate. It unites with water to form **strontium hydroxide** ($Sr(OH)_2$), which is used in refining beet sugar. **Strontium nitrate** ($Sr(NO_3)_2$) and other salts of strontium color a flame crimson; the nitrate is used in making red signal lights and fireworks, especially red fire. The latter is essentially a mixture of potassium chlorate, shellac, and strontium nitrate. The production of the crimson colored

flame is a **test for strontium.** Another test is the precipitation of white strontium sulphate by the addition of calcium sulphate solution to the solution of a strontium salt. (See Part II, Exp. **200.**)

**428. Compounds of Barium.** — The most abundant native compounds are **witherite** (barium carbonate, $BaCO_3$) and **barite** (barium sulphate, $BaSO_4$). **Barium hydroxide** ($Ba(OH)_2$) solution is often called **baryta water,** and like limewater it forms an insoluble carbonate ($BaCO_3$) when exposed to carbon dioxide. **Barium chloride** ($BaCl_2$) is used to test for sulphuric acid and soluble sulphates, because it readily interacts with them and forms insoluble barium sulphate ($BaSO_4$); conversely, this serves as the **test for barium.** This precipitated salt is a fine, white powder, and being cheap and heavy it is a common adulterant of ordinary white paint. Ground native barium sulphate, often called **barytes,** has a similar use. Barium sulphate is also used to increase the weight of paper and to give it a gloss. Barium salts color a flame green, and **barium nitrate** ($Ba(NO_3)_2$) is used in making fireworks, especially green fire. The production of the green flame is a **test for barium.** Commercial **barium sulphide** ($BaS$), as well as the sulphides of calcium and strontium, shine feebly in the dark, after having been exposed to a bright light. On account of this property they are used in making luminous paint. **Barium chromate** ($BaCrO_4$) is obtained as a yellow precipitate by the interaction of potassium dichromate (or potassium chromate) and a soluble barium compound; being a colored compound, its formation is sometimes used as a **test for barium.** (See Part II, Exp. **201.**)

## EXERCISES

**1.** Name several native compounds of calcium. What proportion of the earth's crust is calcium? Compare this proportion with that of other abundant elements.

**2.** Review topics: (*a*) The properties of normal and acid calcium carbonate. (*b*) Calcium compounds previously studied. (*c*) Compare the manufacture of calcium and sodium.

**3.** Practical topics: (*a*) Does limestone "burn"? (*b*) Is the term *limewater* accurate? Why? (*c*) How should lime be stored? (*d*) Compare the setting of plaster of Paris and mortar. (*e*) Suggest experiments to show that lime is calcium oxide.

**4.** State the properties and uses of lime. How is it made? Discuss the manufacture of cement.

THIS PAGE IS LOCKED TO FREE MEMBERS
Purchase full membership to immediately unlock this page

Get Smart

Over 2,000 years of human knowledge in 797,885 volumes

Instant access $8.99/month

Continue

*Fair usage policy applies

# CHAPTER XXVII

## ALUMINIUM — CLAY AND CLAY PRODUCTS

**429. Occurrence.** — Aluminium, or Aluminum, does not occur free in nature, but its compounds are numerous, abundant, and widely distributed. About 8 per cent of the earth's crust is combined aluminium; in abundance it ranks first among the metals and third among the elements (**8**). All important rocks except limestone and sandstone contain silicates of aluminium and other metals. Clay and slate are mainly silicate of aluminium, which was formed by the partial decomposition of rocks and minerals. Corundum and emery are aluminium oxide ($Al_2O_3$). Bauxite is an hydroxide of aluminium ($H_4Al_2O_5$); it is often colored red by iron oxide. Cryolite is sodium aluminium fluoride ($Na_3AlF_6$); it is a white, icelike solid.

**430. Metallurgy.** — Aluminium is obtained by the electrolysis of aluminium oxide ($Al_2O_3$). The purified oxide is dissolved in molten cryolite, and when the current passes, aluminium is deposited at the cathode.

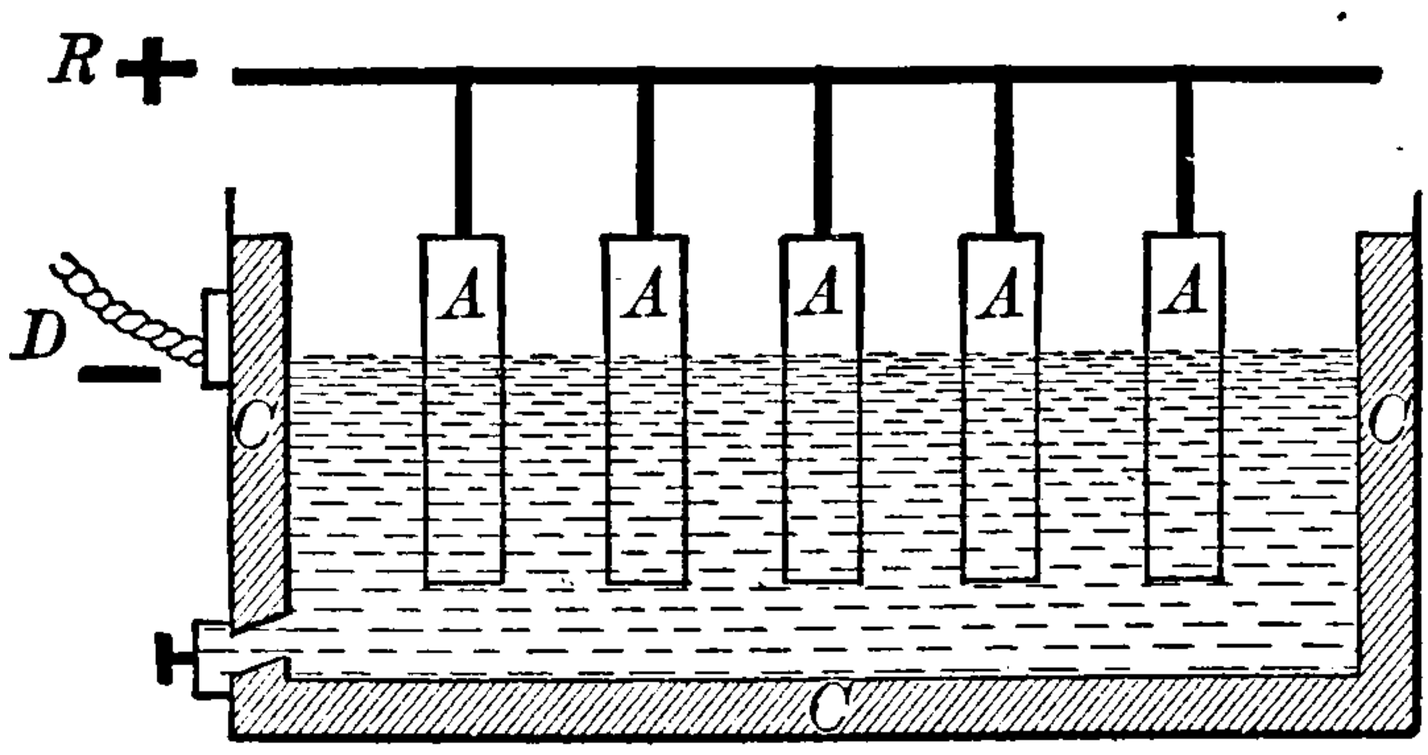


Fig. 87. — Apparatus for the Manufacture of Aluminium by the Electrolysis of Aluminium Oxide. Connection is Made with the Cathode at D.

In the commercial preparation of aluminium, an open iron vessel (C, C, C) lined with carbon is made the cathode (Fig. 87). The anode consists of several carbon bars (A, A, etc.) hung from a common copper rod (R), which can be lowered as the carbon

is consumed. The bottom of the box is first covered with cryolite, the anode is lowered, and the box is then filled with cryolite. The current is turned on, and in its resisted passage through the cryolite, enough heat is generated to melt the cryolite. Pure, dry aluminium oxide is now added, which is decomposed into aluminium and oxygen. The oxygen goes to the anode, where part escapes and part unites with the carbon. The molten aluminium, being heavier than cryolite, sinks to the bottom of the vessel. The process is continuous, fresh aluminium oxide being added and the molten aluminium being drawn off at intervals. The cryolite is unchanged chemically.

**431. Properties.** — Aluminium is a lustrous white metal. It is very light compared with other common metals, since its specific gravity is only about 2.6; this value is one third that of iron. It is ductile and malleable, and is extensively made into wire and sheets. It is a good conductor of heat and electricity. Compared with most common metals aluminium is rather hard and strong. It melts at about 658° C., and can be cast and welded, though not readily soldered so as to produce a permanent joint. Aluminium is only very slightly acted upon by air and water. It combines with some non-metals, especially chlórine and sulphur; it combines with oxygen at high temperatures and is an excellent reducing agent (see Thermit, **432**). Hydrochloric acid changes it into soluble aluminium chloride, thus: —

$$\underset{\text{Aluminium}}{2Al} + \underset{\text{Hydrochloric Acid}}{6HCl} = \underset{\text{Aluminium Chloride}}{2AlCl_3} + \underset{\text{Hydrogen}}{3H_2}$$

Under ordinary conditions nitric and dilute sulphuric acids do not affect it; concentrated sulphuric acid acts upon it, forming aluminium sulphate. Sodium chloride attacks it, especially if dilute acids are present. Sodium and potassium hydroxides change it into aluminates with liberation of hydrogen, thus: —

$$6NaOH + 2Al = 2Na_3AlO_3 + 3H_2$$

Sodium Hydroxide — Aluminium — Sodium Aluminate — Hydrogen

**432. Uses.** — The varied properties of aluminium, especially its strength, lightness, and durability, adapt it to numerous uses. It is made into the metallic parts of military outfits, caps for jars, surgical instruments, cooking utensils, tubes, fittings of boats, automobiles, and air ships, parts of opera glasses and telescopes, framework of cameras, stock patterns for foundry work, hardware samples, and scientific apparatus. Its attractive appearance has led to its extensive use as an ornamental metal, both in interior decorative work and in numerous small objects. Aluminium leaf is used for decorating book covers and signs; the powder suspended in an adhesive liquid is used as a protective and attractive paint for steam pipes, radiators, smokestacks, and other metal objects exposed to heat or the weather. Aluminium wire has come into general use as a conductor of electricity. Large quantities of aluminium are consumed in the steel industry, in the manufacture of alloys and certain metals, and in welding metals.

The use of aluminium in the steel industry depends on the ease with which it combines with any oxygen in the molten metal, thereby preventing the formation of small holes in the solidified metal. Its use in the manufacture of certain metals and in welding is based on its property of reducing oxides with the liberation of a large amount of heat. For example, when a mixture of chromium oxide and powdered aluminium is ignited at one point by a special device, the reduction thus initiated proceeds rapidly throughout the mixture and the intense heat fuses the chromium, which can be removed from the crucible subsequently as a coherent mass; the aluminium oxide

THIS PAGE IS LOCKED TO FREE MEMBERS
Purchase full membership to immediately unlock this page

HISTORY

Tens of thousands of important historical sources, many previously unobtainable, are now available for the first time with a Forgotten Books Full Membership.

Unlimited Access
$8.99/month

Continue

*Fair usage policy applies

near Greece. Both are very hard substances, pure corundum ranking next to diamond. Emery in the form of powder, cloth, paper, and wheels is used to grind and polish hard metals, plate glass, etc. The transparent varieties of corundum have long been prized as gems, among them being the sapphire and ruby.

Pure aluminium oxide can be prepared by heating its hydroxide. Thus prepared, it is a white powder, insoluble in water. It melts at about 1900° C. Gems having the same composition and properties as the natural stones are now made from aluminium oxide by melting it, alone or mixed with coloring substances, with an oxyhydrogen blowpipe. If more or less pure alumina is melted in an electric furnace, it solidifies on cooling to a crystalline mass, which resembles corundum. It is used as an abrasive and resistent material under the name of **alundum.** When alumina or any other compound of aluminium is heated, then cooled and moistened with cobaltous nitrate solution and heated again, the mass turns a beautiful blue color. Its formation is a **test for aluminium.**

**435. Aluminium Hydroxide,** $Al(OH)_3$, is a white, jellylike solid formed by adding ammonium hydroxide to a solution of an aluminium salt, thus: —

$$\underset{\text{Aluminium Chloride}}{AlCl_3} + \underset{\text{Ammonium Hydroxide}}{3NH_4OH} = \underset{\text{Aluminium Hydroxide}}{Al(OH)_3} + \underset{\text{Ammonium Chloride}}{3NH_4Cl}$$

It is insoluble in water. It interacts with strong acids and strong bases (in excess), forming respectively aluminium salts and aluminates. Hence it may be regarded as having both basic and acid properties, though both are weak. Equations illustrating these properties are —

$$\underset{\text{Aluminium Hydroxide}}{Al(OH)_3} + \underset{\text{Hydrochloric Acid}}{3HCl} = \underset{\text{Aluminium Chloride}}{AlCl_3} + \underset{\text{Water}}{3H_2O}$$

$$\underset{\text{Aluminium Hydroxide}}{Al(OH)_3} + \underset{\text{Sodium Hydroxide}}{3NaOH} = \underset{\text{Sodium Aluminate}}{Na_3AlO_3} + \underset{\text{Water}}{3H_2O}$$

**436. Aluminium Sulphate,** $Al_2(SO_4)_3$, is a white solid prepared from clay or bauxite by heating with sulphuric acid. The commercial substance is often impure. The crystallized salt usually has the formula $Al_2(SO_4)_3.18H_2O$. It is used in dyeing and paper making, in purifying water, and in preparing alum and other aluminium compounds.

A solution of aluminium sulphate has an acid reaction on account of **hydrolysis**; the equation for the hydrolysis is —

$$\underset{\text{Aluminium Sulphate}}{Al_2(SO_4)_3} + \underset{\text{Water}}{6H_2O} = \underset{\text{Aluminium Hydroxide}}{2Al(OH)_3} + \underset{\text{Sulphuric Acid}}{3H_2SO_4}$$

The acid reaction is due to the hydrogen ions produced by the ionization of the sulphuric acid. Practical application is made of this reaction in purifying water. Upon adding aluminium sulphate to impure water, the gelatinous aluminium hydroxide that is precipitated slowly settles and carries with it suspended particles and germs. (See Part II, Exp. **207**.)

**437. Alum.** — When solutions of aluminium sulphate and potassium sulphate are mixed and concentrated by evaporation, transparent, colorless, glassy crystals are deposited. This solid is potassium alum or simply alum. It has the composition represented by the formula, $K_2Al_2(SO_4)_4.24H_2O$, or $K_2SO_4.Al_2(SO_4)_3.24H_2O$. It is the type of a class of similar salts called alums, which can be prepared from sulphates of univalent and trivalent metals (e.g. K, Na, $NH_4$, and Al, Cr, Fe).

Alums are rather soluble in water, and their solutions have an acid reaction owing to hydrolysis (compare **436**). They crystallize as octahedrons and contain twenty-four molecules of water of crystallization. When heated, alums lose their water of crystallization and usually some sulphur trioxide, and become a white powder or a porous mass known as burnt alum.

Potassium alum is the most common, but ammonium

and sodium alums are manufactured and used. Alum (and sometimes aluminium sulphate) is an ingredient of some baking powders; such powders are not to be recommended because they interfere with digestion. Alums are used in dyeing and printing cloth, in tanning and paper making, as a medicine, for hardening plaster, in making wood and cloth fire-proof, and in preparing aluminium compounds. Aluminium sulphate is gradually displacing aluminium alums for many purposes, especially the purification of water. (See Part II, Exps. **207, 210, 211.**)

**438. Mordants.** — Aluminium hydroxide is extensively used as a **mordant** in dyeing. Many dyes must be fixed in the fiber by a metallic substance, otherwise the color would be easily removed. The cloth to be dyed or printed is first impregnated or printed with an aluminium salt, such as aluminium acetate, and then exposed to steam or treated with ammonium hydroxide. This operation changes the aluminium salt into aluminium hydroxide, which is precipitated in the fiber of the cloth. The mordanted cloth is next passed through a vat containing the solution of the dye, which unites chemically or mechanically (perhaps both) with the aluminium hydroxide, forming a colored compound. The latter is relatively insoluble and cannot be easily washed from the cloth, i.e. it is a fast color.

**439. Aluminium Chloride,** $AlCl_3$, when pure is a white powder, but it is often a yellowish, crystalline mass ($AlCl_3.6H_2O$). It is prepared by heating powdered aluminium in chlorine, or by passing chlorine over a heated mixture of aluminium oxide and carbon. Exposed to air, it absorbs moisture and gives off fumes of hydrochloric acid. It dissolves in water with evolution of heat, and if the solution is heated, hydrochloric acid is expelled, owing to the hydrolysis of the chloride, thus —

$$\underset{\text{Aluminium Chloride}}{AlCl_3} + \underset{\text{Water}}{3H_2O} = \underset{\text{Hydrochloric Acid}}{3HCl} + \underset{\text{Aluminium Hydroxide}}{Al(OH)_3}$$

THIS PAGE IS LOCKED TO FREE MEMBERS
Purchase full membership to immediately unlock this page

Get Smart

Over 2,000 years of human knowledge in 797,885 volumes

Instant access $8.99/month

Continue

*Fair usage policy applies

heating again. In making **pottery** the raw materials are less carefully selected and prepared, and not heated to such a high temperature. The best grades can hardly be distinguished from porcelain, but usually pottery is much heavier and thicker. If less pure, plastic clay is used and heated to a moderate temperature, the product is known as **earthenware.** This is a large class and includes tiles, terra-cotta, jugs, flowerpots, and clay tobacco pipes. This ware is porous and is sometimes glazed by throwing salt into the kiln just before the operation is over. The salt volatilizes and forms a fusible sodium aluminium silicate upon the surface. **Clay products used for construction** include bricks, conduits, drain pipe, etc. They are made from impure clay and heated just enough to harden the mixture. The product varies with the clay, but is often colored red owing to iron oxide formed from the iron compounds in the unburned clay.

## EXERCISES

**1.** Compare the proportion of aluminium in the earth's crust with the proportion of other abundant elements (**8**).

**2.** Compare the metallurgy of aluminium with that of other metals.

**3.** Discuss the interaction of aluminium hydroxide with acids and with alkalies.

**4.** Essay topics: (*a*) History of aluminium. (*b*) Ceramics. (*c*) Clay. (*d*) Dyeing. (*e*) Uses of aluminium. (*f*) Aluminium in gems. (*g*) Use and care of aluminium ware.

**5.** Practical topics: (*a*) Two pans are identical in size and thickness of material, one being of aluminium and the other of iron. Compare their weights. (*b*) Starting with aluminium how would you prepare in succession $AlCl_3$, $Al(OH)_3$, $Na_3AlO_3$, $AlCl_3$, $Al(OH)_3$, $Al_2O_3$, Al?

## PROBLEMS

**1.** Calculate the weight of aluminium in (*a*) 20 gm. of aluminium oxide, (*b*) 34 gm. of aluminium hydroxide, (*c*) 49 gm. of aluminium chloride.

**2.** Honeystone is a mineral occurring in brown coal seams and has the formula $Al_3C_{12}O_{12}.18H_2O$. Calculate the per cent of aluminium in it.

**3.** Write the formulas of the following compounds: Aluminium nitrate, aluminium bromide, aluminium phosphate (ortho), aluminium fluoride, aluminium silicate (meta), potassium aluminate. Calculate the per cent of aluminium in any three of these compounds.

**4.** How many pounds of aluminium in a ton (2000 lb.) of pure kaolin?

**5.** What weight of aluminium can be obtained from 100 kilograms of bauxite (93 per cent $Al(OH)_3$)?

# CHAPTER XXVIII

## IRON — NICKEL AND COBALT

**442. Occurrence of Iron.** — In abundance iron ranks fourth among the elements and second among the metals (**8**). Uncombined iron is found in meteorites. Combined iron is found in most rocks, soils, and natural waters. It is assimilated by plants and animals and is essential to their life processes, being a constituent of chlorophyll (the green coloring matter of plants) and of hemoglobin (the red coloring matter of blood). The chief **ores** of iron are red and black hematite ($Fe_2O_3$), brown hematite (limonite, $Fe_4O_3(OH)_6$), magnetite ($Fe_3O_4$), and siderite ($FeCO_3$). The most abundant ore and the chief source of iron and steel is hematite, which comes mainly from the Lake Superior region. Large quantities of iron ore are also mined in Alabama, Tennessee, and the Virginias.

Other abundant compounds of iron, not used as a source of the metal, are iron pyrites ($FeS_2$), pyrrhotite (varying from $Fe_6S_7$ to $Fe_{11}S_{12}$), and the copper-iron sulphides (chalcopyrite, $CuFeS_2$, and bornite, $Cu_3FeS_3$ — see **394**).

**443. Preparation and Properties of Pure Iron.** — Chemically pure iron, though uncommon in commerce, may be obtained as a powder by reducing the oxide with hydrogen or as irregular plates by the electrolysis of a solution of ferrous sulphate. Such iron is called iron "by hydrogen," or electrolytic iron.

Pure iron is a silvery white, lustrous metal. It is ductile and malleable, and softer than ordinary iron, being about as soft as aluminium. The specific gravity

is 7.86 and the melting point is 1520° C. It is attracted by a magnet, but soon loses its own magnetism. Dry air has no effect upon iron, but moist air rusts it. **Rusting** is a complex process and is explained in different ways. A recent and acceptable interpretation based on the theory of electrolytic dissociation is that the iron first interacts with the water. The iron goes into solution as ferrous ions ($Fe^{++}$) and hydrogen ions ($H^{+}$) escape as hydrogen gas ($H_2$); the ferrous ions combine with the hydroxyl ions ($OH^{-}$) left in the water and form ferrous hydroxide ($Fe(OH)_2$), which is subsequently converted into the complex substance called iron rust. Once begun, rusting proceeds rapidly, because the film of rust is not compact enough to protect the metal. Like many metals, iron readily interacts with dilute acids, and as a rule hydrogen and ferrous compounds (e.g. ferrous sulphate, $FeSO_4$) are the products.

**444. Varieties of Iron.** — It is customary to speak of **three varieties of iron,** — cast iron, wrought iron, and steel. The physical properties of the different varieties of iron are modified by the proportions of carbon and the other constituents as well as by the method of manufacture. Hence there are several different kinds of iron and steel.

**445. Metallurgy of Cast Iron.** — Iron is extracted most easily from its oxides. The ore, if not an oxide, is first crushed and roasted to change it into ferric oxide ($Fe_2O_3$) as far as possible. Thus prepared, the ore is mixed with a flux (usually limestone) and carbon (usually in the form of coke) and smelted in a blast furnace. The carbon reduces the oxide to metallic iron and the flux converts impurities in the ore (e.g. silicon and aluminium compounds) into fusible silicates called slag.

THIS PAGE IS LOCKED TO FREE MEMBERS
Purchase full membership to immediately unlock this page

HISTORY

Tens of thousands of important historical sources, many previously unobtainable, are now available for the first time with a Forgotten Books Full Membership.

Unlimited Access
$8.99/month

Continue

*Fair usage policy applies

latter interacts with the ore and reduces it. As the smelting proceeds, the reduction continues and the flux forms a slag; both iron and slag sink, the molten iron finally falling through the slag to the bottom of the furnace, where both are drawn off through separate openings at desired intervals. The iron is usually run from the furnace into molds of sand or iron and allowed to solidify; such iron is often called **pig iron.** In some plants the molten iron is run into huge vessels, called converters, and made directly into steel (see **449** (1)).

**446. Properties of Cast Iron.** — Cast iron contains from 2 to 5 per cent of carbon, together with varying proportions of silicon and manganese and traces of phosphorus and sulphur. If most of the carbon is combined with the iron, the variety is called white cast iron. But if much of the carbon remains uncombined as graphite, gray cast iron is formed; it is softer and less brittle than the white variety, and melts at a lower temperature. Cast iron has a crystalline structure and is brittle; it will withstand great pressure. It cannot be welded or forged, that is, hot pieces cannot be united, nor be shaped by hammering. But it can be cast. Cast iron is not attacked by alkalies and only slightly by concentrated acids. Sulphuric acid is sometimes concentrated and often transported in iron vessels. Dilute acids interact readily with cast iron.

This is the kind of iron used in an ordinary iron foundry. The iron which melts at a comparatively low temperature (about 1200° C.) is heated in a furnace similar to a blast furnace, and when molten is poured into sand molds of the desired shape. Considerable cast iron is made into steel. Cast iron containing 5 to 20 per cent of manganese is called spiegel iron, while ferro-manganese contains 20 or more per cent of manganese.

**447. Preparation and Properties of Wrought Iron.** — Wrought iron is made from cast iron by removing most of the impurities (carbon, silicon, phosphorus, and sulphur).

The **process** is conducted in a furnace much like a reverberatory furnace (Fig. 90). The bottom (B) of the furnace is covered with iron ore (ferric oxide, $Fe_2O_3$) and the charge of cast iron and flux is laid upon it. The intense heat that is reflected down upon the charge by the roof of the furnace melts the cast iron; the carbon forms carbon monoxide and dioxide which escape, while the silicon, manganese, sulphur, and phosphorus are oxidized and unite with the flux or the iron oxide and form a slag. As the impurities are removed, the mass becomes pasty, owing to its higher melting point, and is stirred vigorously, or "puddled." At the proper time large lumps called blooms are removed and hammered, or more often rolled between ponderous rollers. This operation removes most of the slag, and if the rolling is repeated, the quality of the iron is improved; the final rolling often leaves the iron in the desired shape.

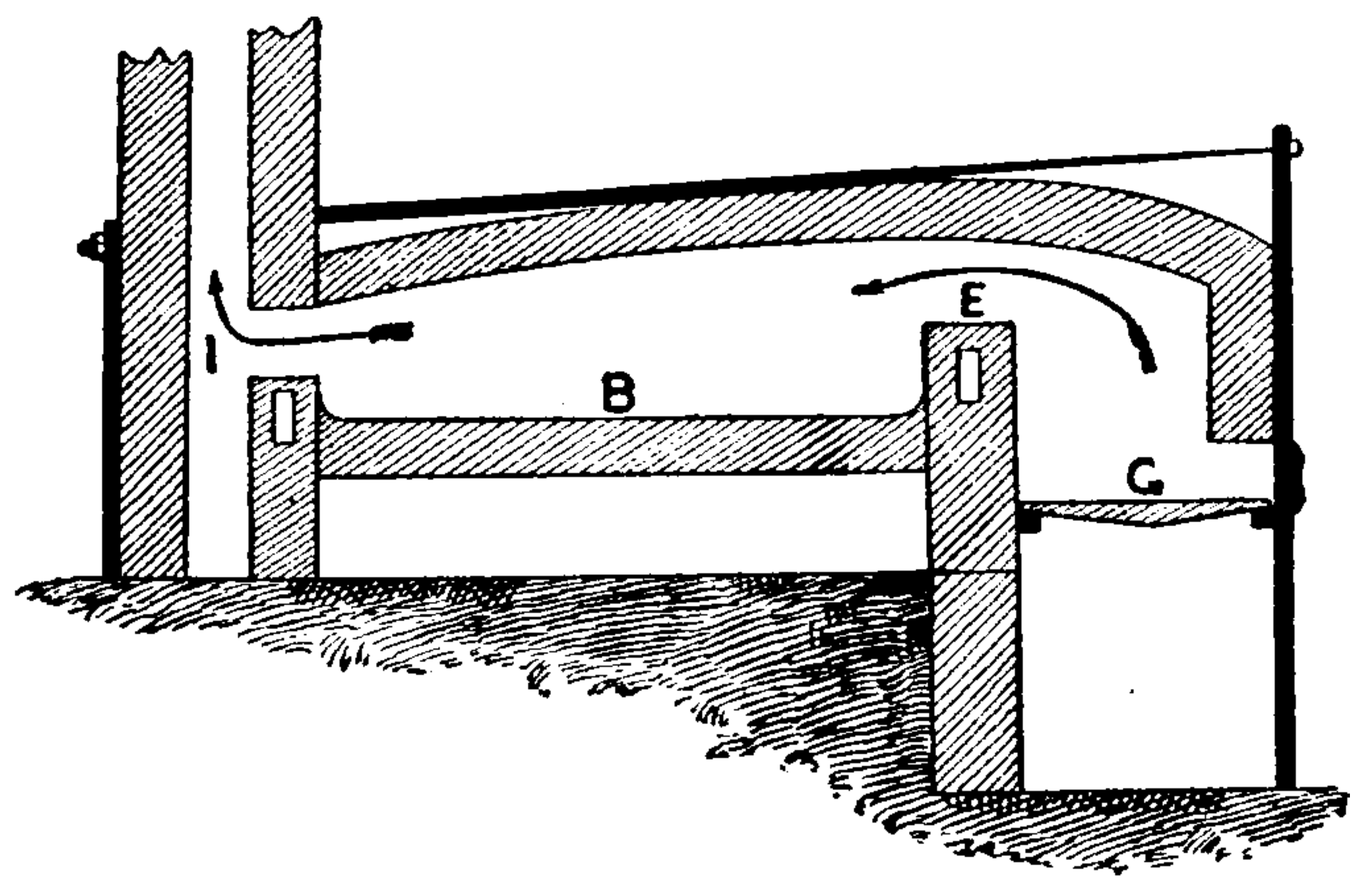


Fig. 90. — Reverberatory Furnace. The fire burns on the grate, G, and the long flame which passes over the bridge, E, is reflected down by the sloping roof upon the contents of the furnace. Gases escape through I. The charge, which rests upon B, does not come in contact with the fuel, but is oxidized or reduced by the flame.

Wrought iron is the purest variety of commercial iron. It is practically pure iron mixed with a little slag (.1 to 2 per cent). The iron itself contains not more than 0.5

per cent of carbon and sometimes only 0.06 per cent, the average being about 0.15 per cent; the other elements are present in mere traces. Unlike cast iron it is fibrous and can be bent. It melts at a high temperature (1600° to 2000° C.) and it is not used for casting. Since it softens at about 1000° C., it can be forged and welded, and may be seen undergoing these operations in a blacksmith's shop. It is very malleable and ductile, and in these forms the metal is very strong. It can be rolled into plates and sheets and drawn into fine wire. Wrought iron rusts more rapidly than cast iron, and is also more vigorously attacked by acids and alkalies at a high temperature. Wrought iron is made into wire, sheets, rods, nails, spikes, bolts, chains, anchors, horseshoes, tires, and agricultural implements. It is less important than formerly, since it is being replaced by soft steel (**452**).

**448. Steel** is a form of iron which contains, as a rule, more carbon and other elements than wrought iron and less than cast iron. However, many grades of steel are manufactured, and their physical properties do not depend merely on the presence of certain proportions of carbon, phosphorus, silicon, sulphur, etc., but more especially on the method of manufacture.

**449. Manufacture of Steel.** — Steel is made from cast iron. The aim in the manufacture is to prepare a product containing little or no sulphur, phosphorus, and silicon, but the desired proportion of carbon. Most of the steel is made in the United States by two general methods. The Bessemer process consists in burning out the impurities in cast iron by forcing air through the molten metal contained in a movable receptacle lined with silica, and then adding just enough iron of known composition to purify the metal and give the desired

THIS PAGE IS LOCKED TO FREE MEMBERS
Purchase full membership to immediately unlock this page

Get Smart

Over 2,000 years of human knowledge in 797,885 volumes

Instant access $8.99/month

Continue

*Fair usage policy applies

ties have been burned out, sufficient spiegel iron or ferro-manganese is added to furnish the proper amount of carbon and manganese. By adding certain metals, e.g. aluminium, titanium, or vanadium, gases are removed, and a better quality of steel is produced. After the completion of the operation, which takes about twenty minutes, the converter is tilted and the metal is poured into molds to form blocks called ingots, which are subsequently shaped into rails or other objects.

The process described in the preceding paragraph is called the acid Bessemer process because the converter is lined with silica, which is a non-metallic or an acid anhydride (**187**). By this process the carbon and silicon can be removed but not all the sulphur and phosphorus. It is used in the United States because domestic ores are low in phosphorus and sulphur. In Europe the Thomas-Gilchrist process or basic process is used. The converter in this modified process is lined with burned dolomite (i.e. practically a mixture of lime and magnesia). This lining, after use, is known as Thomas slag; it is utilized as a fertilizer on account of its phosphorus content.

(2) The **open-hearth process** is conducted in a special kind of furnace called an open-hearth furnace (Fig. 92). The receptacle, or hearth (H), in which the charge is melted, is lined with limestone or burned dolomite, thereby making the process a basic one. At the base of the furnace are duplicate sets of checkerwork (A, B and C, D) arranged for alternate use. As the hot gases pass through A, B to the chimney, they heat the checkerwork. The fuel gas is then passed through B and air through A. The mixture of air and gas burns and produces a much higher temperature on the hearth than if the gaseous mixture were cool. The oxidizing flame passes over the charge on the hearth (H), oxidizing some of the impurities and keeping the mass at such a temperature that other impurities form a slag with the lining. Meanwhile

the hot products of combustion and the unused gases are passed through the checkerwork C, D and heat it. By means of valves the fuel gas and air are then made to pass through this checkerwork to the hearth and out over the other checkerwork (A, B) to the chimney.

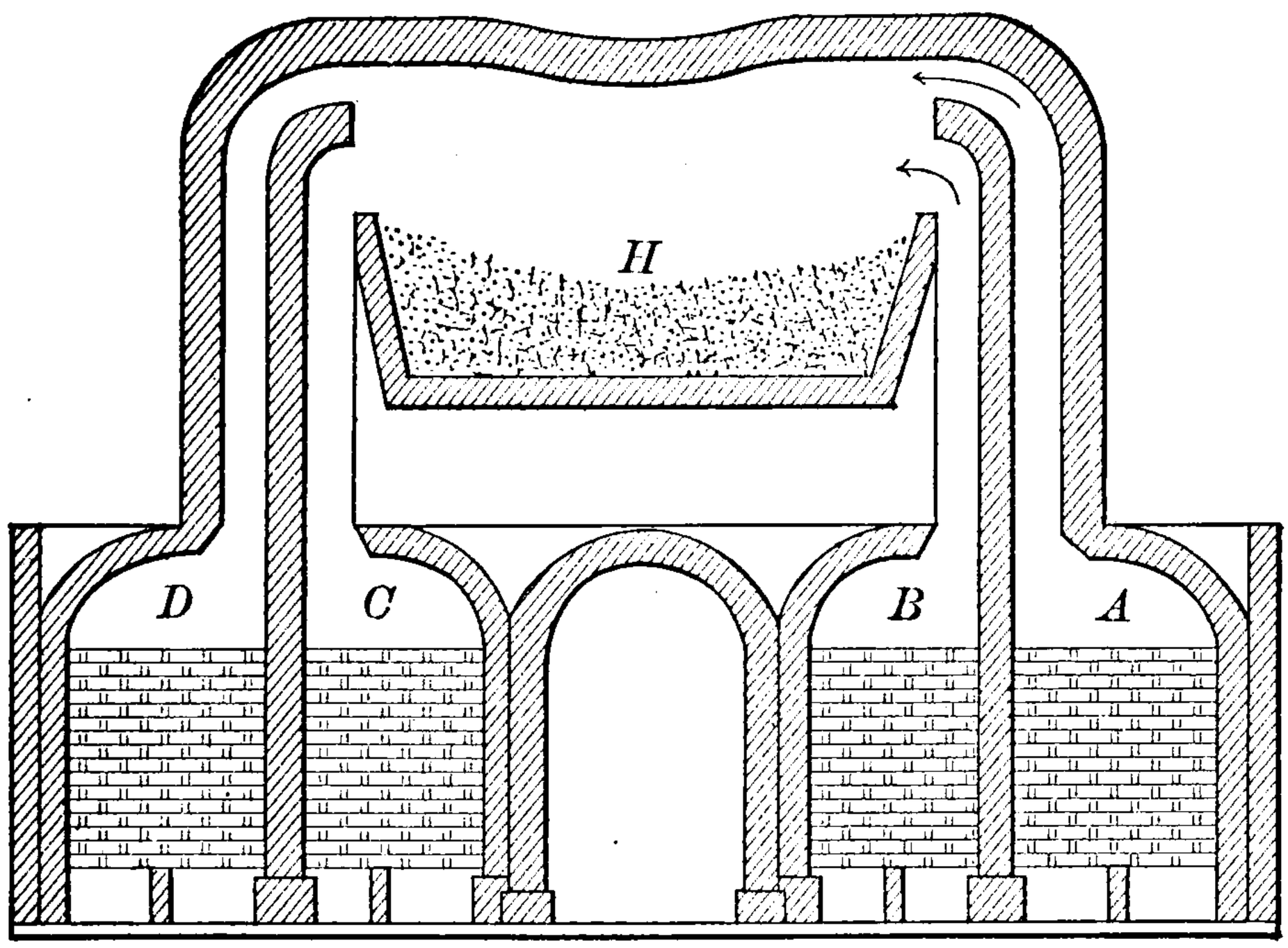


Fig. 92. — Open-Hearth Furnace. (Vertical Section.)

Thus the process is alternated, one checkerwork being cooled as the other is heated, and *vice versa.* It is only by this regenerative process, as it is called, that enough heat is obtained to keep the charge melted as it becomes purer and purer. The charge is heated from six to twelve hours; when a test shows that the metal contains the desired proportion of carbon, ferromanganese is added, and the steel is quickly poured into molds and allowed to cool into ingots. The open-hearth process is easily controlled and yields a tough, elastic steel, which is excellent for bridges, large machines, large guns, and gun carriages.

**450. Other Processes of Making Steel.** — The **crucible process** consists in melting wrought iron with charcoal in graphite or clay

crucibles. During the melting the iron is slowly changed into steel by absorbing the proper proportions of carbon. In the **cementation process** wrought iron and carbon are heated in fire-brick boxes for several days. The transformation is the same as in the crucible process. In the **electric process** a superior quality of steel is made by utilizing the heat of an electric furnace.

**451. Alloys of Steel.** — Steel alloys, or special steels as they are called, are made by adding to steel small quantities of certain metals, such as nickel, chromium, molybdenum, tungsten, vanadium, and manganese. Such steel alloys differ in special properties, though all are characterized by extreme hardness, toughness, and strength, which make them almost indispensable for certain uses. Thus, nickel-chromium steel is used for armor plate, tungsten and molybdenum steel for high-speed tools, manganese steel for safes and rock-crushing machinery, and vanadium steel for automobile parts. The metals are sometimes added directly to the molten steel, but more often in the state of an alloy of iron; these alloys contain varying but known percentages of the metals, and are called ferrochrome, ferrosilicon, etc.

**452. Properties of Commercial Steel.** — The properties are numerous because there are many kinds of steel. Thus, steel, using this term broadly, is fusible and malleable, and can be forged, welded, and cast. Varieties containing 0.2 per cent of carbon are much like wrought iron and are called soft or mild steel. Structural steel contains more carbon (0.2 to 0.8 per cent) and is hard like cast iron, while tool steel, which contains upwards of 1.5 per cent of carbon, is very hard indeed. Its most valuable property is the varying hardness that it may be made to acquire. If steel is heated very hot and then suddenly cooled by immersion in cold water

THIS PAGE IS LOCKED TO FREE MEMBERS
Purchase full membership to immediately unlock this page

HISTORY

Tens of thousands of important historical sources, many previously unobtainable, are now available for the first time with a Forgotten Books Full Membership.

Unlimited Access
$8.99/month

Continue

*Fair usage policy applies

**roso-ferric oxide** (magnetic oxide of iron, $Fe_3O_4$) occurs native as magnetite; if noticeably magnetic, it is called **loadstone.** It is produced as a black film or scale by heating iron in the air; heaps of it are often seen beside the anvil in a blacksmith's shop. The firm coating of this oxide formed by exposing iron to steam protects the metal from further oxidation; iron thus coated is called Russia iron. Some authorities regard this oxide as iron ferrite ($Fe(FeO_2)_2$).

**456. Hydroxides.** — **Ferrous hydroxide** ($Fe(OH)_2$) is a white solid formed by the interaction of a ferrous salt and an hydroxide, such as sodium hydroxide. Exposed to the air, it soon turns green, and finally brown, owing to oxidation to ferric hydroxide. **Ferric hydroxide** ($Fe(OH)_3$) is a reddish brown solid, formed by the interaction of an hydroxide and a ferric salt.

**457. Ferrous Sulphate** ($FeSO_4$) is a green salt obtained by the interaction of iron (or of ferrous sulphide) and dilute sulphuric acid (e.g. see **455**). It is prepared on a large scale by oxidizing iron pyrites ($FeS_2$). This is accomplished simply by roasting, or more often by exposing heaps of pyrites to moist air; the mass is extracted with water containing scrap iron and a small proportion of sulphuric acid. From the clear solution, large light green crystals are obtained ($FeSO_4.7H_2O$); in this form the substance is often called **green vitriol** or **copperas.** Exposed to the air, ferrous sulphate effloresces and oxidizes. Large quantities are used in dyeing silk and wool, as a disinfectant, and in manufacturing ink, bluing, and pigments. Much black writing ink is made essentially by mixing ferrous sulphate, nutgalls, gum, and water.

**458. Ferric Sulphate** ($Fe_2(SO_4)_3$) is formed by oxidizing ferrous sulphate with nitric acid. When ferric sulphate solution is mixed

with the proper quantity of potassium (or ammonium) sulphate, **iron alum** ($K_2SO_4.Fe_2(SO_4)_3.24H_2O$) is formed. It is a pale violet, crystallized solid, which has properties like ordinary alum. Iron alum is used chiefly as a mordant (**437, 438**).

**459. Iron Sulphides.** — Commercial **ferrous sulphide** (FeS) is a black, brittle, metallic-looking solid, but the native compound is yellow and crystalline. It is also obtained as a black precipitate by the interaction of a dissolved ferrous salt and ammonium sulphide. It is made on a large scale by fusing a mixture of iron and sulphur, and is used chiefly in preparing hydrogen sulphide. **Ferric sulphide** (iron disulphide, iron pyrites, pyrite, $FeS_2$) is one of the commonest minerals. It is a lustrous, metallic, brass-yellow solid. Crystals of pyrites found in many rocks are often mistaken for gold — hence the popular name "fool's gold." It is valueless as an iron ore, but large quantities are used as a source of sulphur in making sulphuric acid (**284**).

**460. Iron Chlorides.** — When iron interacts with hydrochloric acid, **ferrous chloride** ($FeCl_2$) is formed in solution. Heated in the air or with potassium chlorate or nitric acid, it is changed into ferric chloride, thus: —

$$\underset{\text{Ferrous Chloride}}{2FeCl_2} + \underset{\text{Hydrochloric Acid}}{2HCl} + \underset{\text{Oxygen}}{O} = \underset{\text{Ferric Chloride}}{2FeCl_3} + \underset{\text{Water}}{H_2O}$$

**Ferric chloride** is a brownish deliquescent solid. It is prepared by passing chlorine into ferrous chloride solution, or by the interaction of iron and *aqua regia.* When treated with nascent hydrogen or another reducing agent, ferric chloride is changed into ferrous chloride. The reaction of a solution of ferric chloride is acid, owing to hydrolysis (**165**).

**461. Ferrous Carbonate** ($FeCO_3$) occurs native as the iron ore siderite (clay iron stone or spathic iron ore). The typical variety is light yellow or brown, lustrous, crystalline, and not very hard; but many kinds are impure, and the properties vary. It is slightly soluble in water containing carbon dioxide, and is therefore found in some mineral springs.

**462. Iron Cyanides.** — Iron and cyanogen $(CN)_2$, with or without potassium, form several compounds. The most important is **potassium ferrocyanide** ($K_4Fe(CN)_6$).

It is a lemon-yellow, crystallized solid, containing three molecules of water of crystallization. Unlike the simple cyanogen compounds (e.g. HCN and KCN), it is not poisonous. It is manufactured by fusing iron filings with potassium carbonate and nitrogenous animal matter (such as horn, hair, blood, feathers, and leather). The mass is extracted with water, and the salt is separated by crystallization. Large quantities are used in dyeing and calico printing, and in making bluing and potassium cyanogen compounds. **Potassium ferricyanide** ($K_3Fe(CN)_6$) is a dark red crystallized solid, containing no water of crystallization. It is often called red prussiate of potash. It is manufactured by oxidizing potassium ferrocyanide. In alkaline solution it is a vigorous oxidizing agent, and finds extensive use in dyeing. It is also used in making blue print paper.

Blue print paper is made by coating paper with a mixture of solutions of potassium ferricyanide and ammonium ferric citrate and drying in a dark place. In the sunlight the ferric salt is partly reduced and forms a bronze colored deposit by interaction with the potassium ferricyanide. If such prepared paper is covered with a photographic negative, or with transparent cloth on which lines are drawn in black ink, and placed in the sunlight, the paper is acted upon only in the exposed places. Upon washing, the exposed parts become blue, and the covered parts white. (See Part II, Exp. **221**.)

**463. Tests for Iron.** — Ferrous salts and potassium ferricyanide interact in solution and precipitate **ferrous ferricyanide** ($Fe_3(Fe(CN)_6)_2$). This is a blue solid and is often called Turnbull's blue. Ferric salts interact with potassium ferrocyanide and produce **ferric ferrocyanide** ($Fe_4(Fe(CN)_6)_3$). This precipitate is likewise a dark blue solid, and is called Prussian blue. Prussian blue is extensively used in dyeing and calico printing,

THIS PAGE IS LOCKED TO FREE MEMBERS
Purchase full membership to immediately unlock this page

Get Smart

Over 2,000 years of human knowledge in 797,885 volumes

Instant access $8.99/month

Continue

*Fair usage policy applies

baltic. The cobaltous compounds are more common. **Cobaltous nitrate** ($Co(NO_3)_2$) is a red solid, which crystallizes with six molecules of water of crystallization. The hydrated compound loses water readily and turns blue when heated. Some cobalt compounds are used to color glass, porcelain, and paper, especially a complex compound known as smalt, or smalt blue. The blue color produced by fusing cobalt compounds into a borax bead is a **test for cobalt.** Another test is the precipitation of yellow potassium cobaltinitrite ($K_3Co(NO_2)_6$) by the addition of potassium chloride, potassium nitrite, and acetic acid to a solution of a cobaltous compound.

## EXERCISES

**1.** Discuss the occurrence of iron. Name the chief ores. Name other native compounds of iron. What proportion of the earth's crust is iron? Compare with the abundance of other elements.

**2.** Describe a blast furnace. Summarize the metallurgy of cast iron.

**3.** Describe the manufacture of cast iron. State its general composition, properties, and uses.

**4.** Apply Exercise 3 to wrought iron.

**5.** State the properties of steel. Compare briefly with cast and wrought iron.

**6.** Describe the manufacture of steel by (*a*) the Bessemer process and (*b*) the open-hearth process.

**7.** Essay topics: (*a*) Production and transportation of iron ore. (*b*) Uses of steel. (*c*) Uses of nickel. (*d*) Meteorites. (*e*) Primitive iron smelting. (*f*) Armor plate. (*g*) Special steels.

**8.** What is copperas, rouge, crocus, iron alum, iron pyrites, green vitriol?

**9.** How are ferrous changed into ferric compounds, and *vice versa?*

**10.** Practical topics: (*a*) Cite proofs that iron is widely distributed. (*b*) How would you test coal ashes for iron?

**11.** Sketch from memory a vertical section of (*a*) a blast furnace, (*b*) a converter in operation, (*c*) an open-hearth furnace.

**12.** Starting with iron how would you prepare in succession ferrous chloride, $FeCl_3$, ferric hydroxide, ferric chloride, $Fe_4(Fe(CN)_6)_3$?

## PROBLEMS

**1.** Calculate the per cent of iron in (*a*) olivine, $Mg_2SiO_4.Fe_2SiO_4$, (*b*) chalcopyrite, $CuFeS_2$, (*c*) potassium ferrocyanide, $K_4Fe(CN)_6$, (*d*) iron tetracarbonyl, $Fe(CO)_4$.

**2.** Calculate the weight of iron in (*a*) 70 tons (2000 lb. each) of copperas, (*b*) 3 metric tons of hematite (95 per cent pure), (*c*) 2 kg. of pyrite, (*d*) 1000 lb. of magnetite, (*e*) 175 milligrams of siderite.

**3.** Write the formulas of (*a*) the ferrous and (*b*) the ferric salts of the following acids: Hydrobromic, hydriodic, carbonic, nitric, orthophosphoric, hydrosulphuric, acetic.

**4.** Calculate the percentage composition of (*a*) the three oxides and (*b*) the two chlorides of iron, and show how the two sets of compounds illustrate the law of multiple proportions.

**5.** Calculate the following: (*a*) the weight of ferrous carbonate needed to produce 25 l. of $CO_2$ (standard conditions); (*b*) the weight of iron formed by the interaction of hydrogen and 220 gm. of $Fe_3O_4$; (*c*) the weight of pure iron that can be made from 1000 tons of iron ore (94 per cent of hematite).

**6.** Complete and balance the following: (*a*) $FeCl_3 + (NH_4)_2S = FeS + \text{——}$; (*b*) $FeCl_3 + \text{——} = Fe(OH)_3 + NH_4Cl$; (*c*) $Fe + O = Fe_2O_3$; (*d*) $K_3Fe(CN)_6 + \text{——} = \text{——} + K_2SO_4$; (*e*) $K_4Fe(CN)_6 + \text{——} = \text{——} + KCl$.

**7.** Write the formulas of all the hydroxides of iron, cobalt, and nickel.

# CHAPTER XXIX

## MAGNESIUM — ZINC — CADMIUM — MERCURY

These elements form a natural family, though the members are not so closely related as in the alkali and alkaline earth families.

### Magnesium

**466. Occurrence.** — Magnesium is never found free. In combination it is widely distributed and very abundant, constituting about 2.5 per cent of the earth's crust. **Dolomite** is magnesium calcium carbonate ($CaMg(CO_3)_2$); it forms whole mountain ranges in the Tyrol and vast deposits in many regions. Dolomite closely resembles marble and limestone in its properties, and is sometimes called magnesium limestone. **Magnesium carbonate** ($MgCO_3$) is also abundant. Many of the Stassfurt salts (**377**) are compounds of magnesium, e.g. kainite ($KCl.MgSO_4.3H_2O$), carnallite ($KCl.MgCl_2.6H_2O$), and kieserite ($MgSO_4.H_2O$). Magnesium is also a constituent of many minerals and rocks, such as serpentine, talc, soapstone, asbestos, and meerschaum. The sulphate ($MgSO_4$) and chloride ($MgCl_2$) are found in sea water and in mineral springs.

**467. Preparation.** — Magnesium is prepared by the electrolysis of fused carnallite (Fig. 93). Carnallite is put in the iron vessel C, which is the cathode. This is closed by the air-tight cover through which pass the pipes D D′ for converting an inert gas into and out of the apparatus. The carbon anode A dips into the carnallite and is

THIS PAGE IS LOCKED TO FREE MEMBERS
Purchase full membership to immediately unlock this page

HISTORY

Tens of thousands of important historical sources, many previously unobtainable, are now available for the first time with a Forgotten Books Full Membership.

Unlimited Access
$8.99/month

Continue

*Fair usage policy applies

**470. Magnesium Oxide and Hydroxide.** — Magnesium oxide, $MgO$, is a white, bulky powder. It is formed when magnesium burns in the air, but it is manufactured by gently heating magnesium carbonate, just as lime is made from limestone. It is often called **magnesia,** or calcined magnesia. It combines slowly with water, forming very slightly soluble **magnesium hydroxide** ($Mg(OH)_2$). Like lime, magnesia withstands a very high temperature, and is therefore used in making fire brick, crucibles, furnace linings, and for other purposes requiring a refractory substance, e.g. as an ingredient of a protective mixture for steam pipes. Both magnesium oxide and hydroxide are used as a medicine for dyspepsia and an antidote for poisoning by mineral acids.

**471. Magnesium Sulphate,** $MgSO_4$, is a white solid. There are several crystallized varieties. The native salt **kieserite** ($MgSO_4.H_2O$) when added to water changes into Epsom salts ($MgSO_4.7H_2O$), which is the commercial form of magnesium sulphate. It is very soluble in water, and its solution has a bitter taste. Magnesium sulphate makes water permanently hard (**423**). It is used as a medicine, in manufacturing paints, soap, and sulphates of sodium and potassium, as a fertilizer in place of gypsum, and as a coating for cotton cloth.

**472. Magnesium Chloride,** $MgCl_2$, is a white solid. It is a by-product in the manufacture of potassium chloride from carnallite (**379**). The crystallized salt ($MgCl_2.6H_2O$) is very deliquescent. Magnesium chloride undergoes hydrolysis with hot water, forming magnesium hydroxide and hydrochloric acid. If water containing magnesium chloride is used in a boiler, the insoluble magnesium hydroxide forms a hard scale on the boiler and the liberated hydrochloric acid corrodes the metal. Hence a hard water containing magnesium chloride (or sulphate) should be softened before use (**423**).

If disodium phosphate solution and ammonium hydroxide are added to a solution of a magnesium compound, the precipitation of ammonium magnesium phosphate ($NH_4MgPO_4$) serves as a **test for magnesium.**

**473. Magnesium Carbonate,** $MgCO_3$, occurs native as **magnesite,** and combined with calcium carbonate as dolomite. Like the corresponding calcium compound, it forms the soluble acid carbonate in water containing carbon dioxide (**188**). The commercial salt known as magnesia alba, or simply magnesia, is a complex compound (ordinarily $Mg(OH)_2.3MgCO_3.3H_2O$). Many face powders consist chiefly of magnesia alba. Fluid magnesia, prepared by dissolving magnesium carbonate in water containing carbon dioxide, is used as a medicine.

## Zinc

**474. Occurrence.** — Free zinc is never found. The chief **ores** are zinc sulphide (sphalerite, zinc blende, ZnS), zinc carbonate (smithsonite, $ZnCO_3$), zinc silicates (hemimorphite, $Zn_2SiO_4.H_2O$, willemite, $Zn_2SiO_4$), red zinc oxide (zincite, ZnO), and franklinite ($Zn(Fe, Mn)(FeO_2)_2$). Zinc ores are found in Missouri, Kansas, and New Jersey.

**475. Metallurgy.** — The ores are roasted and then reduced by heating with carbon (Fig. 94). The reduction

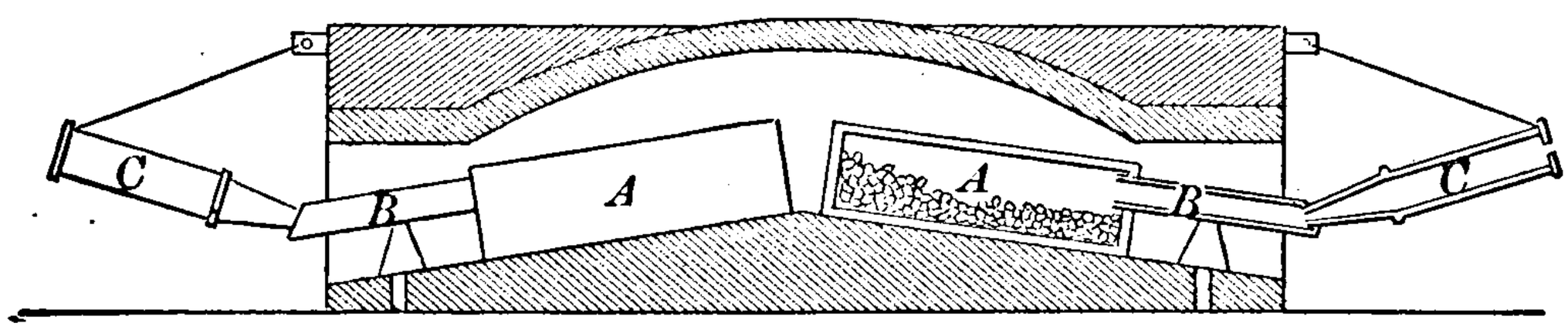


Fig. 94. — Retorts for Reduction of Zinc Oxide (Open — Right, Closed — Left).

is conducted in earthenware retorts (A) connected with double receivers; at first the zinc condenses in C as a powder known as zinc dust, somewhat as sulphur forms flowers of sulphur, but when this receiver becomes hot, the zinc condenses to a liquid in B, from which it is drawn

off at intervals and cast into bars or plates. The impure zinc thus obtained is called **spelter.** It is freed from carbon, lead, iron, cadmium, and arsenic by repeated distillation; very pure zinc is obtained by the electrolysis of a pure zinc salt.

**476. Properties.** — Zinc is a bluish white, lustrous metal. At ordinary temperatures it is rather brittle, but at 100°–150° C. it is soft and can be rolled into sheets and drawn into wire, while its specific gravity rises from 6.9 to 7.2; zinc which has been rolled or drawn does not become brittle upon cooling. Above 150° C. it again becomes brittle. It melts at 419.4° C. and boils at 918° C. If melted zinc is poured into water, it forms brittle lumps called **granulated zinc.** Heated in the air above its melting point, zinc burns with a bluish green flame, forming white zinc oxide (ZnO). Zinc does not tarnish in dry air, but ordinarily it becomes coated with a dark film which is essentially a basic carbonate. Commercial zinc interacts readily with acids and usually liberates hydrogen; pure zinc acts very slowly. Like aluminium, it interacts with hot solutions of sodium and potassium hydroxides (**431**); it forms zincates and hydrogen, thus:—

$$\underset{\text{Potassium Hydroxide}}{2KOH} + \underset{\text{Zinc}}{Zn} = \underset{\text{Hydrogen}}{H_2} + \underset{\text{Potassium Zincate}}{K_2ZnO_2}$$

Zinc displaces certain metals from their solutions (**414**). (See Part II, Exps. **184, 227.**)

**477. Uses.** — Zinc in stick or plates is extensively used as an electrode in electric batteries. Sheet zinc is used as a lining for tanks. The chief use of zinc is in making galvanized iron. This is iron coated with zinc and is made by dipping clean iron into melted zinc. The zinc protects the iron from air and moisture. Hence

THIS PAGE IS LOCKED TO FREE MEMBERS
Purchase full membership to immediately unlock this page

Get Smart

Over 2,000 years of human knowledge in 797,885 volumes

Instant access $8.99/month

Continue

*Fair usage policy applies

zinc salt. An excess of the alkaline hydroxide changes zinc hydroxide into a zincate (**431**).

**479. Tests for Zinc.** — The formation of the sulphide or hydroxide, as above described, serves as a **test for zinc.** A green incrustation is produced when zinc compounds are heated on charcoal and then moistened with cobaltous nitrate solution. (Compare **434.**) (See Part II, Exp. **225.**)

**480. Cadmium,** Cd, occurs in zinc ores, and is extracted from impure zinc. It is white, lustrous, and rather soft. Its specific gravity is 8.6, and it melts at 320.9° C. Cadmium is a constituent of certain fusible alloys (**356**). Wood's metal, for example, contains 12 per cent of cadmium. The most important compound is **cadmium sulphide** (CdS). This is a bright yellow solid, formed by adding hydrogen sulphide to a solution of a cadmium compound. It is used as an artist's color. Its formation serves as the **test for cadmium.**

## Mercury

**481. Occurrence.** — Native mercury is occasionally found in minute globules. The most abundant ore and the chief source of mercury is **mercuric sulphide** (cinnabar, HgS). The ore is extensively mined in Spain, Austria, and Italy; in the United States large quantities are obtained in California and Texas.

Mercury has been known for ages as **quicksilver.** The Latin name, *hydrargyrum*, which gives the symbol Hg, means literally "water silver."

**482. Metallurgy.** — Mercury is readily prepared by roasting cinnabar in a current of air or with calcium oxide and condensing the vapor. The equations for the reactions are: —

$$\underset{\text{Mercuric Sulphide}}{HgS} + \underset{\text{Oxygen}}{O_2} = \underset{\text{Mercury}}{Hg} + \underset{\text{Sulphur Dioxide}}{SO_2}$$

$$\underset{\substack{\text{Mercuric}\\\text{Sulphide}}}{4HgS} + \underset{\substack{\text{Calcium}\\\text{Oxide}}}{4CaO} = \underset{\text{Mercury}}{4Hg} + \underset{\substack{\text{Calcium}\\\text{Sulphide}}}{3CaS} + \underset{\substack{\text{Calcium}\\\text{Sulphate}}}{CaSO_4}$$

Crude mercury is freed from soot, dirt, and mechanical impurities by pressing it through linen or chamois leather, but it must be distilled or agitated with nitric acid (or ferric chloride) to remove the dissolved metals, such as lead or zinc. Mercury is sent into commerce in strong iron flasks holding 75 pounds.

**483. Properties.** — Mercury is a bright, silvery metal, and is the only one that is liquid at ordinary temperatures. It solidifies at $-38.7°$ C. and boils at about $357°$ C. It is a heavy metal, the specific gravity being about 13.59. Mercury is a good conductor of electricity. Mercury does not tarnish in the air, unless sulphur compounds are present. At a high temperature, it combines slowly with oxygen to form the red oxide ($HgO$). Hydrochloric acid and cold sulphuric acid do not affect it; hot concentrated sulphuric acid oxidizes it, and nitric acid changes it into nitrates. . It is displaced from solution by most other metals (**414**). (See Part II, Exp. **229.**)

**484. Amalgams** are **alloys** of mercury. Amalgamated zinc is used in certain electric batteries to prevent unnecessary loss of the zinc. Tin amalgam is sometimes used to coat mirrors. Amalgams of certain metals are used as a filling for teeth. Silver and gold form amalgams readily, and considerable mercury is used in extracting these precious metals from their ores (**404, 411**). Care should be taken, while handling mercury, not to let it come in contact with jewelry.

**485. Uses.** — Mercury is used in making thermometers, barometers, and some kinds of air pumps. Its extensive use in extracting gold and silver has been mentioned. Considerable is used in preparing certain medicines and explosives (e.g. mercury fulminate, which is used in percussion caps and cartridges).

The use of mercury in thermometers depends not only on the fact that it is a bright liquid between a wide range of temperature, but also on the uniform change of volume that accompanies a change of temperature. The curve

showing the relation of volume and temperature is almost a straight line (Fig. 95), that is, the expansion of mercury is regular.

**486. Compounds of Mercury.** — Mercury, like copper and iron, forms two classes of compounds — the mercurous and the mercuric. **Mercuric oxide** (HgO) is a red powder, produced by heating mercury in air or by heating a mixture of mercury and mercuric nitrate. The historical importance of this compound has already been emphasized (**10**). **Mercurous chloride** (HgCl) is a white, tasteless powder, insoluble in water. It is formed when a chloride and mercurous nitrate interact — a **test for mercury in mercurous compounds.** Under the name of **calomel** it is extensively used as a medicine. **Mercuric chloride** ($HgCl_2$) is a white, crystalline solid, soluble in water and in alcohol. It is prepared by heating a mixture of mercuric sulphate and sodium chloride. *Mercuric chloride is a violent poison.* The best antidote is the white of a raw egg. The albumin forms an insoluble mass with the poison, which may then be removed mechanically from the stomach. The common name of mercuric chloride is **corrosive sublimate.** It has powerful antiseptic properties, and is extensively used in surgery to protect wounds from the harmful action of germs; taxidermists sometimes use it to preserve skins, and it has many serviceable applications as a medicine and disinfectant. It is usually used as a dilute solution (1 part to 1000 parts of water). Mercuric chloride when treated with a reducing agent, such as stannous chloride, forms at first white mercurous chloride and finally a dark gray precipitate of finely divided mercury — the **test for mercury in mercuric compounds** (see **493**). The equations for these reactions are: —

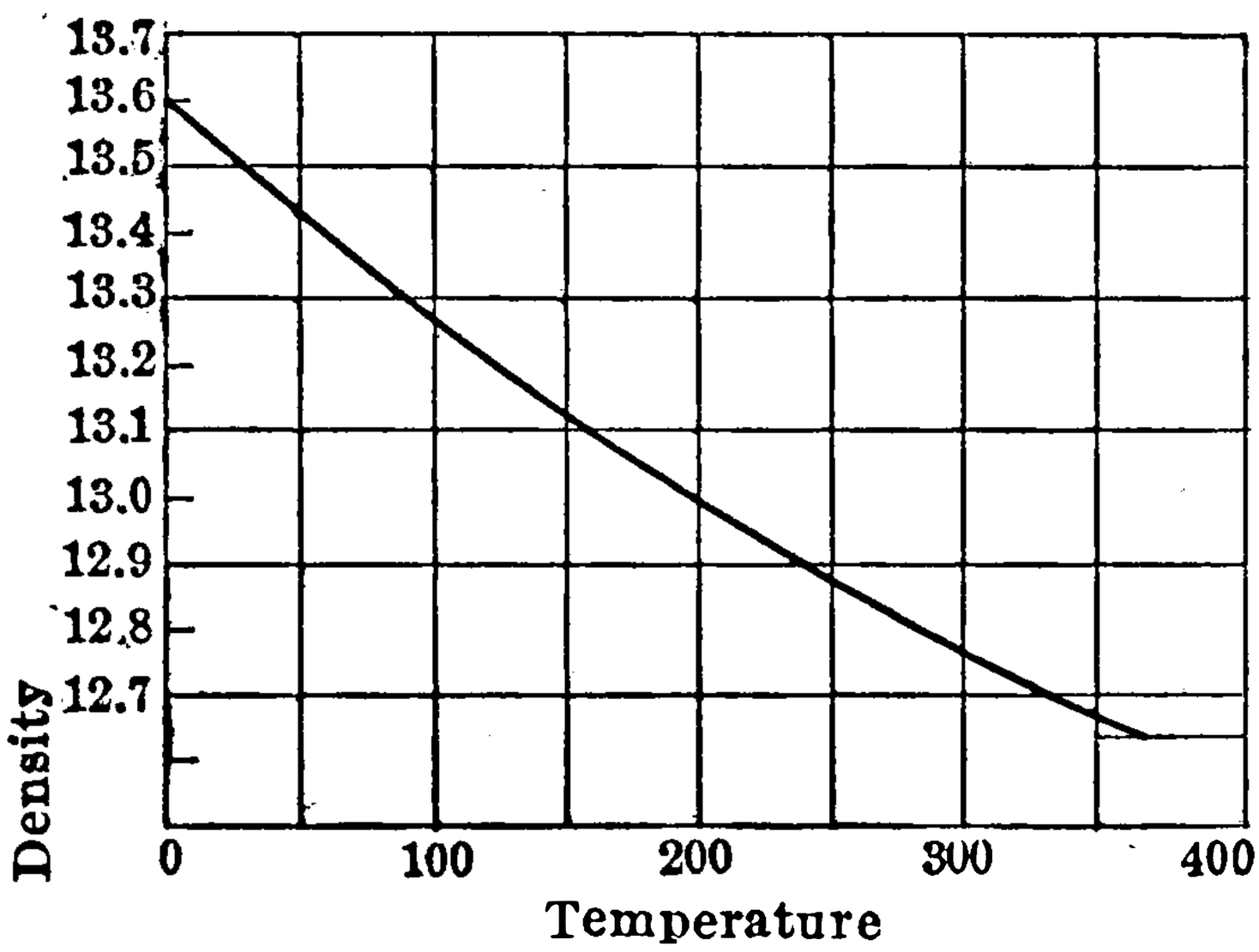


Fig. 95. — Curve Showing Regular Change in Volume of Mercury as the Temperature is Changed.

THIS PAGE IS LOCKED TO FREE MEMBERS
Purchase full membership to immediately unlock this page

HISTORY

Tens of thousands of important historical sources, many previously unobtainable, are now available for the first time with a Forgotten Books Full Membership.

Unlimited Access
$8.99/month

Continue

*Fair usage policy applies

**14.** What is (*a*) magnesia, (*b*) Epsom salts, (*c*) galvanized iron, (*d*) Chinese white, (*e*) white vitriol, (*f*) calomel, (*g*) corrosive sublimate?

## PROBLEMS

**1.** Calculate the per cent of the metallic element in (*a*) magnesium oxide, zinc oxide, mercuric oxide, and cadmium oxide; (*b*) Epsom salts, sphalerite, cinnabar, and smithsonite; (*c*) $Mg_2P_2O_7$, $H_2Zn_2SiO_5$, $Hg(NO_3)_2$, $CdSO_4$.

**2.** Calculate the percentage composition of mercurous and mercuric iodides, and show that these compounds illustrate the law of multiple proportions. (Use exact atomic weights.)

**3.** Write the ordinary and the ionic equations for (*a*) mercuric chloride and hydrogen sulphide form mercuric sulphide and hydrochloric acid, (*b*) magnesium chloride and sodium hydroxide form magnesium hydroxide and sodium chloride, (*c*) zinc hydroxide and sodium hydroxide form sodium zincate and water, (*d*) cadmium nitrate and hydrogen sulphide form cadmium sulphide and nitric acid.

**4.** Write the formulas of the following compounds by applying the principle of valence or by utilizing analogous formulas in this chapter: Magnesium bromide, magnesium nitrate, magnesium sulphide, zinc chromate, zinc carbonate, zinc acetate, zinc phosphate (ortho), mercurous fluoride, mercuric sulphate, mercurous oxide, cadmium hydroxide.

**5.** The annual production of quicksilver in the United States is about 20,600 flasks of 75 pounds each. If this amount was transformed without loss into corrosive sublimate, how many metric tons would be produced?

**6.** What (*a*) weight of mercury, (*b*) weight of sulphur dioxide, and (*c*) volume of sulphur dioxide (standard conditions) can be obtained from a metric ton of cinnabar (60 per cent pure)?

**7.** Calculate the atomic weights of magnesium, mercury, zinc, or cadmium from the following: (*a*) 16.0263 gm. of MgO give 47.8015 gm. of $MgSO_4$; (*b*) 16.03161 gm. of zinc give 20.2608 gm. of ZnO; (*c*) 118.3938 gm. of HgO give 109.6308 gm. of mercury; (*d*) 177.1664 gm. of mercuric sulphide give 152.745 gm. of mercury; (*e*) 23.3275 gm. of $CdBr_2$ give 32.2098 gm. of silver bromide. (Use exact atomic weights.)

# CHAPTER XXX

## TIN — LEAD

### Tin

**487. Occurrence.** — Tin dioxide (cassiterite, tin stone, $SnO_2$) is the only available ore. It is not widely distributed, and is found chiefly in England (at Cornwall), Germany (in Bohemia and Saxony), Australia, Tasmania, and the East Indian Islands, especially Banca and Billiton. None is mined in the United States.

**488. History.** — Tin is one of the oldest metals. Many ancient bronzes contain tin. The Latin word *stannum* gives us the symbol Sn and the terms stannous and stannic.

**489. Metallurgy.**— If the tin ore contains sulphur or arsenic, these impurities are removed by roasting. The tin oxide is then reduced by heating it with coal in a reverberatory furnace (Fig. 90). The simplest equation of this change is —

$$\underset{\text{Tin Dioxide}}{SnO_2} + \underset{\text{Carbon}}{C} = \underset{\text{Tin}}{Sn} + \underset{\text{Carbon Dioxide}}{CO_2}$$

The molten tin collects at the bottom of the furnace and is drawn off and cast into bars or masses, which are often called **block tin.** Usually it is purified by melting it slowly on a hearth, inclined so that the more easily melted tin will flow down the hearth and leave the metallic impurities behind. This tin may be further purified by stirring the molten metal with a wooden pole, or by holding billets of wood beneath its surface. The impurities which are oxidized by the escaping gases collect as a scum on the surface and are removed.

**490. Properties.** — Tin is a white, lustrous metal, which does not tarnish easily in air. It is soft and malleable, and can be readily cut and hammered. It is

softer than zinc, but harder than lead. Its specific gravity is about 7.3. Tin may be obtained in the crystalline form, and when a piece of such tin is bent it makes a crackling sound, which is probably caused by the friction of the crystals upon one another. It melts at 231.9° C., and when heated to a higher temperature it burns, forming white tin oxide ($SnO_2$). Ordinary tin if kept below about 20° C. changes into gray tin, which is a dull looking powder. Sometimes objects containing tin, such as organ pipes, medals, and statues, disintegrate owing to the formation of powdery tin; once started, the "tin disease," as it is called, spreads rapidly. Concentrated hydrochloric acid changes it into stannous chloride ($SnCl_2$); with hot concentrated sulphuric acid, it forms stannous sulphate ($SnSO_4$) and sulphur dioxide; and concentrated nitric acid oxidizes it, the white, solid product being known as metastannic acid (probably $(H_2SnO_3)_5$). Certain metals precipitate tin from its solutions often as a grayish black, spongy mass filled with bright scales (**414**). (See Part II, Exp. **234.**)

**491. Uses.** — Tin is so permanent in air, weak acids (like vinegar and fruit acids), and alkalies that it is extensively used as a protective coating for metals. The tin plate (sheet tin, or simply "tin") is made by dipping very clean sheet iron or steel into molten tin. Thus coated, it is made into tinware, cans, and many useful objects. Copper coated with tin is made into vessels for cooking, and brass coated with tin is made into pins. Tinned iron or steel does not rust until the iron is exposed, and then the rusting proceeds rapidly. Tin is also hammered into thin sheets called tin foil, though much tin foil contains lead.

**492. Alloys.** — Those containing a minor per cent of

THIS PAGE IS LOCKED TO FREE MEMBERS
Purchase full membership to immediately unlock this page

Get Smart

Over 2,000 years of human knowledge in 797,885 volumes

Instant access $8.99/month

Continue

*Fair usage policy applies

sulphide (galena, PbS). Other native compounds are the carbonate (cerussite, $PbCO_3$) and the sulphate (anglesite, $PbSO_4$). Lead ore is found in the United States in the Middle West (Illinois, Iowa, Wisconsin, and Missouri), Colorado, Idaho, and Utah. Spain, Mexico, and Germany produce considerable.

**495. History.**— Lead and its compounds have been used since the dawn of history. The Chinese have used it for ages to line chests in which tea is stored and transported. The Romans, who obtained it from Spain, called it *plumbum nigrum*, i.e. black lead, and used it for conveying water just as we do today. The symbol Pb comes from *plumbum*.

**496. Metallurgy.** — Lead is obtained from galena by several processes. (1) Ores rich in lead are roasted in a reverberatory furnace (Fig. 90) until a part of the sulphide is changed into lead oxide and lead sulphate. The equations for these changes are —

$$\underset{\text{Lead Sulphide}}{2PbS} + \underset{\text{Oxygen}}{3O_2} = \underset{\text{Lead Oxide}}{2PbO} + \underset{\text{Sulphur Dioxide}}{2SO_2}$$

$$\underset{\text{Lead Sulphide}}{PbS} + \underset{\text{Oxygen}}{2O_2} = \underset{\text{Lead Sulphate}}{PbSO_4}$$

The air is then shut off and the mixture of the three lead compounds is heated to a higher temperature. By this operation the lead sulphide interacts with the other lead compounds, forming lead and sulphur dioxide, thus —

$$\underset{\text{Lead Sulphide}}{2PbS} + \underset{\text{Lead Sulphate}}{PbSO_4} + \underset{\text{Lead Oxide}}{2PbO} = \underset{\text{Lead}}{5Pb} + \underset{\text{Sulphur Dioxide}}{3SO_2}$$

(2) Ores poor in lead are roasted with iron, which combines with the sulphur, leaving the lead free, thus: —

$$\underset{\text{Lead Sulphide}}{PbS} + \underset{\text{Iron}}{Fe} = \underset{\text{Lead}}{Pb} + \underset{\text{Iron Sulphide}}{FeS}$$

(3) Ores rich in silver are first roasted and then heated with a mixture of coke, limestone, and iron ore. The lead, gold, silver, and other metals collect as a liquid in a receptacle in the lower part of the furnace.

Lead produced by these processes is impure and must be refined. This is done by first heating the metal in a reverberatory furnace (Fig. 90) to oxidize most of the copper, arsenic, and antimony, and then treating the alloy of lead, gold, silver, etc., by the Parkes process (**404**), or by an electrolytic process somewhat like that used for copper (**396**). In refining lead by **electrolysis,** the cathode is a sheet of pure lead, the anode is a heavy plate of impure lead, and the electrolytic solution is a mixture of lead fluosilicate ($PbSiF_6$) and gelatin. When the current passes, pure lead is deposited upon the cathode and most of the other metals remain attached to the remnant of the anode; subsequently the gold and silver as well as bismuth are recovered.

**497. Properties.** — Lead is a bluish metal. When scraped or cut, it has a brilliant luster, which soon disappears, owing to the formation of a film of oxide. It is a soft metal, and can be scratched with the finger nail. It discolors the hands, and when drawn across a rough surface it leaves a black mark. For this reason it is sometimes called black lead (**172**). Lead is not tough nor very ductile and malleable, though it can be made into wire, rolled into sheets, and pressed while soft into pipe. It is a heavy metal, its specific gravity being 11.34; with the exception of mercury, it is the heaviest of the familiar metals. It melts at 327.4° C. Lead when heated strongly in air changes into oxides (mainly the monoxide, PbO). Hydrochloric and sulphuric acids have little effect upon compact lead. Nitric acid changes

it into lead nitrate ($Pb(NO_3)_2$). Acetic acid (or vinegar) and acids from fruits and vegetables change it into soluble, poisonous compounds; hence cheap tin-plated vessels, which sometimes contain lead, should never be used in cooking. Certain metals precipitate lead from its solutions as a grayish mass, which often has a beautiful treelike appearance (**414**). (See Part II, Exp. **234**.)

**498. Uses.** — Lead is extensively used as pipe. Lead pipe is not only used to convey water to and from parts of buildings, but as a sheath for copper wires, both overhead and underground. Sheet lead is used to cover roofs and to line sinks, cisterns, and the cells employed in many electrolytic processes. The lead chambers and some evaporating pans used in manufacturing sulphuric acid are made of sheet lead. Shot and bullets are lead (alloyed with a little arsenic). Spongy lead is used in preparing the plates of storage batteries.

**499. Alloys.** — Alloys containing considerable lead are type metal, solder, Babbitt metal and pewter (**399, 352, 492**). Most fusible metals contain lead (**356**).

**500. Lead Oxides.** — There are three important oxides. **Lead monoxide** ($PbO$) is a yellowish powder known as massicot, or a buff-colored crystalline mass called **litharge.** It is formed by heating melted lead in a current of air. It is made this way, though considerable is obtained as a by-product in separating silver from lead. Large quantities are used in preparing some oils and varnishes, flint glass, lead compounds, and as a glaze for pottery. **Lead tetroxide** (red lead or minium, $Pb_3O_4$) is a red powder, varying somewhat in color and composition. It is prepared by heating lead (or lead monoxide) to about 350° C. It is used in making flint glass; pure grades are made into artists' paint, but the cheap variety

THIS PAGE IS LOCKED TO FREE MEMBERS
Purchase full membership to immediately unlock this page

HISTORY

Tens of thousands of important historical sources, many previously unobtainable, are now available for the first time with a Forgotten Books Full Membership.

Unlimited Access
$8.99/month

Continue

*Fair usage policy applies

containing a weak solution of acetic acid (Fig. 96). These pots are arranged in tiers in a large building, and spent tan bark is placed between each tier. The building is now closed except openings for the entrance and exit of air and steam. The heat volatilizes the acetic acid which changes the lead into lead acetate. The tan bark ferments and liberates carbon dioxide, which converts the lead acetate into basic lead carbonate or white lead. The operation is allowed to proceed until the lead is entirely transformed — sixty to one hundred days. Commercial white lead is manufactured by other processes, the products varying somewhat with the process.

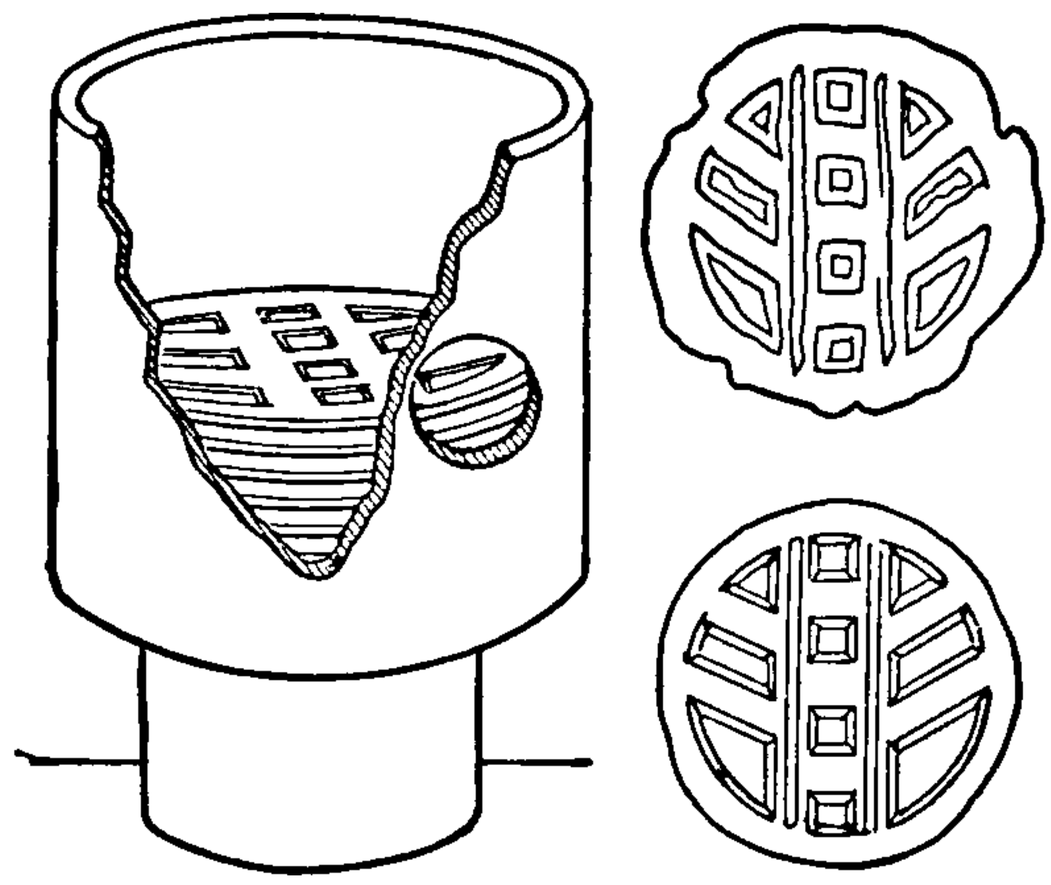

Fig. 96. — Earthenware Vessel Containing Lead Disks to be Made into White Lead. Disk Before (Lower) and After (Upper) Corrosion.

**503. Other Compounds of Lead.** — Native **lead sulphide** (PbS) is the mineral **galena,** the chief ore of lead. It resembles lead in appearance, but is harder and is usually crystallized as cubes, octahedrons, or their combinations (Fig. 97). It is obtained as a black precipitate by the interaction of hydrogen sulphide (or other soluble sulphides) and a solution of a lead salt. Its formation is the **test for lead.** **Lead chloride** ($PbCl_2$) is a white

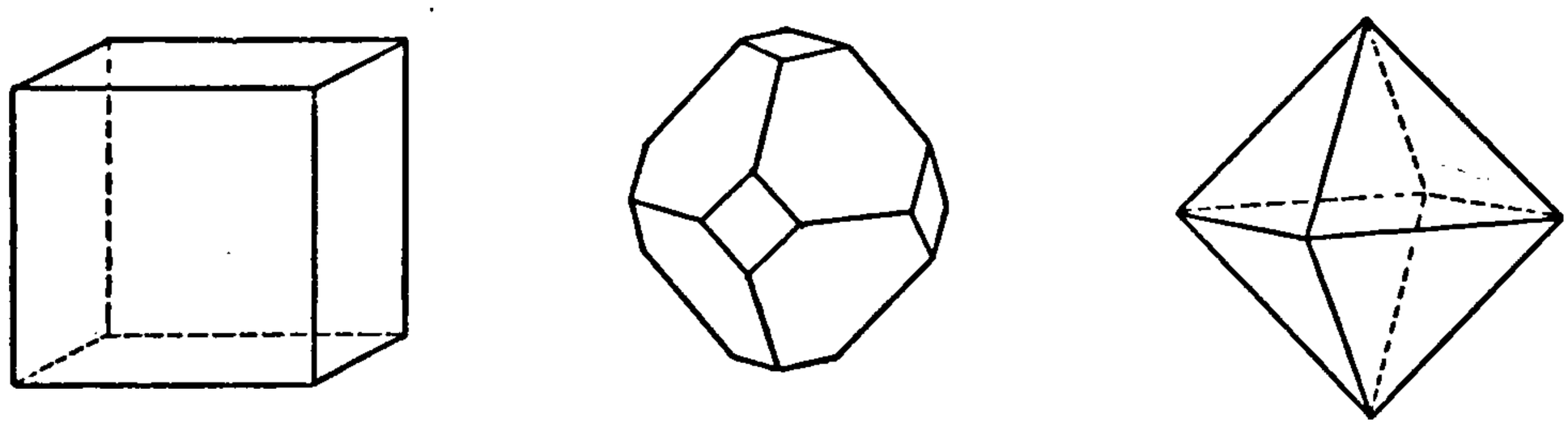

Fig. 97. — Galena Crystals (Cube, Octahedron and Cube, Octahedron).

solid formed by adding hydrochloric acid or a soluble chloride to a cold solution of a lead salt. It dissolves in hot water. **Lead sulphate** ($PbSO_4$) is a white solid, formed by adding sulphuric acid or a soluble sulphate to a solution of a lead salt. It is very slightly soluble in water, but soluble in concentrated sulphuric acid, hence crude sulphuric acid often contains lead sulphate. **Lead nitrate** ($Pb(NO_3)_2$) is a white crystalline solid formed by dissolving lead (or

lead monoxide) in dilute nitric acid. **Lead acetate** ($Pb(C_2H_3O_2)_2$) is a white, crystalline solid formed by the action of acetic acid upon lead or lead oxide (PbO). **Lead Chromate** ($PbCrO_4$) is a yellow solid formed by adding a solution of a lead compound to a solution of potassium chromate or potassium dichromate. It is sometimes called chrome yellow and is used as a pigment. Its formation serves as a **test for lead.** (See Part II, Exp. **233.**)

**504. Cerium** (Ce) **and Thorium** (Th) are members of a family in the same periodic group as tin and lead. They are constituents of rare minerals. Their compounds are prepared from **monazite** sand. A mixture of the oxides of thorium and cerium composes the Welsbach mantle (**213**). In making mantles, a cotton bag is dipped into a solution of thorium and cerium nitrates and then burned. The cotton is consumed and the nitrates are changed into a firm mass of oxides. (See Part II, Exp. **102.**) Thorium is a radioactive element (**526**).

## EXERCISES

**1.** Describe the metallurgy of tin and of lead.

**2.** Summarize the properties of tin and of lead. State their uses.

**3.** Describe three alloys which contain large proportions of tin. Name several alloys containing a minor proportion of tin.

**4.** Essay topics: (*a*) History of tin. (*b*) Tin disease. (*c*) Tin plate industry. (*d*) Tin mordants. (*e*) Tin foil and its substitutes. (*f*) Recovery of tin from tin scrap.

## PROBLEMS

**1.** Calculate the weight of (*a*) lead in 250 gm. of $PbO_2$ and (*b*) of tin in 250 gm. of $SnO_2$.

**2.** How many gm. of lead in (*a*) 200 gm. of galena, (*b*) 1 kg. of litharge, (*c*) a metric ton of red lead, (*d*) 750 gm. of cerussite?

**3.** Write the formulas of the following compounds by applying the principle of valence: Lead fluoride, lead acetate, lead dichromate, stannous iodide, stannic bromide, stannous sulphide, stannic sulphide.

**4.** Calculate the atomic weight of lead or tin from the following: (*a*) 16.2956 gm. of lead give 17.554 gm. of PbO; (*b*) 4.9975 gm. of $PbCl_2$ require 3.881 gm. of silver to precipitate the lead; (*c*) 25 gm. of tin give 31.8 gm. of stannic oxide (the specific heat of tin is .055); (*d*) 29.42 gm. of tin unite with 35.4 gm. of chlorine, and the vapor density of the compound is 8.303.

**5.** Complete and balance the following: (*a*) $SnCl_2 + HgCl_2 = SnCl_4 +$ ——; (*b*) $Sn + HNO_3 = H_2SnO_3 + 4NO +$ ——; (*c*) $SnCl_2 + H_2S = SnS +$ ——; (*d*) $Pb(NO_3)_2 + HCl = PbCl_2 +$ ——.

# CHAPTER XXXI

## CHROMIUM — MANGANESE

### Chromium

**505. Occurrence.** — Metallic chromium is never found free. Its chief ore is ferrous chromite (chrome iron ore, $Fe(CrO_2)_2$). Native lead chromate (crocoite, $PbCrO_4$) is less common. Traces of chromium occur in many minerals and rocks, e.g. emerald and serpentine, and verde antique marble. Chromite is mined chiefly in Greece, New Caledonia, New South Wales, and Turkey.

**506. Preparation, Properties, and Uses.** — Chromium is produced in large quantities by reducing chromic oxide with granulated aluminium (see Thermit, **432**).

Chromium is a silvery, crystalline, hard, and brittle metal. Its specific gravity is about 6.9 and its melting point is 1510° C. It is not oxidized by air at ordinary temperatures.

Chromium is used to harden steel, especially the kind that is made into armor plate, projectiles, safes, vaults, and parts of the machines used to crush gold-bearing quartz. This hardened steel is called chrome steel. It forms other alloys which are very hard. One commercial form of chromium is an alloy of 65 to 80 per cent chromium, a little carbon, and the rest iron; this alloy is called ferrochrome (**451**). Another alloy, called nichrome, contains nickel.

**507. Potassium Chromate** and **Potassium Dichromate** (or **Bichromate**). — **Potassium chromate** ($K_2CrO_4$) is a lemon-yellow, crystalline solid, very soluble in water. Acids change it into the dichromate, thus: —

$$2K_2CrO_4 + H_2SO_4 = K_2Cr_2O_7 + K_2SO_4 + H_2O$$

| Potassium Chromate | Sulphuric Acid | Potassium Dichromate | Potassium Sulphate | Water |
|---|---|---|---|---|

THIS PAGE IS LOCKED TO FREE MEMBERS
Purchase full membership to immediately unlock this page

Get Smart

Over 2,000 years of human knowledge in 797,885 volumes

Instant access $8.99/month

Continue

*Fair usage policy applies

porcelain or platinum a mixture of a chromium compound, potassium carbonate, and potassium nitrate. When the mass is boiled with acetic acid to decompose the carbonate and expel carbon dioxide, and then added to a lead salt solution, yellow lead chromate is formed. This experiment is often used as a **test for chromium.** (See Part II, Exps. **239, 240.**)

**508. Chrome Alum,** $K_2Cr_2(SO_4)_4.24H_2O$, is a purple, crystalline solid. It is analogous in composition and similar in properties to ordinary alum, but it contains chromium instead of aluminium (**437**). It can be prepared by mixing potassium and chromium sulphates in the proper proportion, or by passing sulphur dioxide into a solution of potassium dichromate containing sulphuric acid. Chrome alum is used as a mordant in dyeing and calico printing. It is also used in tanning because it acts like other tanning materials in much less time.

**509. Lead Chromate,** $PbCrO_4$, is a bright yellow solid, formed by adding potassium chromate or dichromate to a solution of a lead salt. Its formation is a **test for chromium.** It is known as chrome yellow and is used in making yellow paint (**504**).

**510. Other Compounds of Chromium.** — Three other chromium compounds should be mentioned. **Chromic oxide** ($Cr_2O_3$) is a bright green powder prepared by heating **chromic hydroxide** ($Cr(OH)_3$), and is the basis of the chrome green pigments used to color glass and porcelain. When chromium compounds are heated with borax they color the bead green, owing to the formation of this oxide. There are several chromic hydroxides. The typical one is a bluish solid formed by the interaction of a chromic compound (e.g. chrome alum) and an alkaline hydroxide, carbonate, or sulphide. The chromic hydroxide, which is always precipitated, is soluble in an excess of sodium (or potassium) hydroxide. That is, it is changed into a soluble chromite, just as aluminium hydroxide forms soluble aluminates. Unlike aluminates, however, the chromites are changed back into chromic hydroxide by boiling. When concentrated sulphuric acid is added to a saturated solution of potassium dichromate (or chromate), **chromium trioxide** ($CrO_3$) separates as long, bright red crystals;

this oxide is sometimes called **chromic acid.** It is a vigorous oxidizing agent.

**511. Molybdenum** (Mo), **Tungsten** (W), and **Uranium** (U) are rare metallic elements in the same periodic group as chromium. **Ammonium molybdate** ( $(NH_4)_2MoO_4$) is used to detect and determine phosphorus in fertilizers (**340**). Tungsten is used to harden steel and as a filament of electric light bulbs; sodium tungstate is used for making cloth fireproof. Uranium compounds are obtained chiefly from pitchblende and uraninite. Salts of uranium (e.g. sodium uranate, $Na_2U_2O_7.6H_2O$) are used in making fluorescent glass; such glass is green by transmitted light and yellow by reflected light. Uranium is a radioactive element (**526**).

## Manganese

**512. Occurrence.** — This metal is not found free in nature, but its oxides and hydroxides are widely distributed and rather abundant. The chief compound is manganese dioxide (pyrolusite, $MnO_2$).

**513. Preparation, Properties, and Uses.** — Manganese is prepared by heating manganese dioxide with charcoal in an electric furnace, or by reducing the oxide with aluminium powder (**432**). The metal is grayish, hard, and brittle. It melts at 1225° C.

**514. Alloys of manganese** and iron are extensively used in the manufacture of steel (**449, 451**). Spiegel iron contains from 5 to 20 per cent of manganese, while ferromanganese contains 20 per cent or more.

**515. Manganese Dioxide,** $MnO_2$, is the most abundant and important compound. It is a black solid and is often called black oxide of manganese. When heated it yields oxygen; and when heated with hydrochloric acid the two compounds interact, forming manganous chloride, chlorine, and water, thus —

$$\underset{\text{Manganese Dioxide}}{MnO_2} + \underset{\text{Hydrochloric Acid}}{4HCl} = \underset{\text{Manganese Chloride}}{MnCl_2} + \underset{\text{Chlorine}}{Cl_2} + \underset{\text{Water}}{2H_2O}$$

It colors glass and borax a beautiful amethyst, and is often used in glass making to neutralize the green color caused by impurities. Large quantities are used in the manufacture of oxygen, chlorine, glass, and manganese alloys and compounds.

**516. Potassium Permanganate,** $KMnO_4$, is a dark purple, glistening, crystalline solid, though the crystals sometimes appear black with a greenish luster. It is very soluble in water, and the solution is red, purple, or black, according to the concentration. Potassium permanganate gives up its oxygen readily and is frequently used as an oxidizing agent. It is also used as a disinfectant, as a medicine, in bleaching and dyeing, in coloring wood brown, and in purifying gases, such as hydrogen, ammonia, and carbon dioxide. (See Part II, Exp. **244.**)

The uses of potassium permanganate depend mainly upon its oxidizing power. With sulphuric acid the action is represented thus: —

$$\underset{\text{Potassium Permanganate}}{2KMnO_4} + \underset{\text{Sulphuric Acid}}{3H_2SO_4} = \underset{\text{Oxygen}}{5O} + \underset{\text{Manganese Sulphate}}{2MnSO_4} + \underset{\text{Potassium Sulphate}}{K_2SO_4} + \underset{\text{Water}}{3H_2O}$$

The liberated oxygen oxidizes any organic matter present, and the solution becomes brown or colorless, owing to the reduction of the potassium permanganate into colorless compounds.

**517. Other Compounds of Manganese.** — Three manganous compounds are important, the **chloride** ($MnCl_2$), the **sulphate** ($MnSO_4$), and the **sulphide** ($MnS$). The chloride and sulphate are pink, crystalline salts. The sulphide is a flesh-colored precipitate formed by adding ammonium sulphide to the solution of a manganous salt, the color distinguishing it from all other sulphides; its formation serves as a **test for manganese. Potassium manganate** ($K_2MnO_4$) is obtained as a green mass by fusing a mixture of a manganese compound, potassium hydroxide (or carbonate), and potassium nitrate. Its formation on a small scale constitutes the **test for manganese. Sodium manganate** ($Na_2MnO_4$) is used in solution as a disinfectant. In manganates (and also in permanganates) manganese acts as a non-metal. (See Part II, Exp. **241.**)

THIS PAGE IS LOCKED TO FREE MEMBERS
Purchase full membership to immediately unlock this page

HISTORY

Tens of thousands of important historical sources, many previously unobtainable, are now available for the first time with a Forgotten Books Full Membership.

Unlimited Access
$8.99/month

Continue

*Fair usage policy applies

# CHAPTER XXXII

## PLATINUM

**518. Occurrence.** — Platinum occurs as the chief ingredient of an alloy called platinum ore. The associated metals are ruthenium, osmium, iridium, rhodium, and palladium. Iron, gold, and copper are also usually present. Only one native compound is known, viz. platinum arsenide (sperrylite, $PtAs_2$).

**519. Preparation.** — Platinum is obtained as a spongy mass by subjecting its alloy to a complicated treatment which involves boiling with *aqua regia*, then precipitation with ammonium chloride, and final heating. This spongy platinum is melted in a lime crucible with an oxyhydrogen flame, or in an electric furnace, and hammered while hot into a compact form.

**520. Properties and Uses.** — Platinum is a lustrous, silvery metal. It is malleable and ductile. Although it is attacked by fused caustic alkalies, low melting metals, and *aqua regia*, it is practically indispensable in the chemical laboratory, owing to its high melting point (1755° C.) and its resistance to many chemicals. Platinum is a good conductor of electricity and has about the same coefficient of expansion as glass; these properties adapt it for use in incandescent electric light bulbs. Electrodes are often made of platinum. A rigid alloy of platinum is used by dentists as a support for teeth. Recently platinum has come into use as jewelry, especially in the form of mountings for gems. Platinum has a specific gravity of about 21, which is higher than that of any known substance, except osmium and iridium. In the

form of a black, porous mass it is called spongy platinum, and a still finer form is called platinum black. Asbestos coated with platinum is used as a catalyzer in manufacturing sulphuric acid by the contact process (**286, 287**). Platinum forms alloys with other metals, and should never be heated with lead, similar metals, or their compounds, since the alloys have a low melting point. With iridium, however, it forms a very hard alloy of which certain standard metric apparatus is made.

**521. Compounds.** — Chloroplatinic acid ($H_2PtCl_6$) is formed by dissolving platinum in *aqua regia;* it yields the sparingly soluble, yellow salts potassium chloroplatinate ($K_2PtCl_6$) and ammonium chloroplatinate ( $(NH_4)_2PtCl_6$).

**522. The metals** associated with platinum have limited uses. **Palladium** is used in chemical analysis to absorb hydrogen, and a native (as well as an artificial) alloy of **iridium** and **osmium,** called iridosmine or osmiridium, is used to tip gold pens.

## PROBLEMS

**1.** A piece of platinum foil measuring 10.5 cm. by 1.5 cm. weighs 0.723 gm. Into how many pieces, each weighing 1 dg., may it be divided?

**2.** The specific heat of platinum is 0.0324. According to analysis, 35.5 gm. of chlorine unite with 48.6 gm. of platinum to form platinic chloride. What is (*a*) the atomic weight of platinum and (*b*) the formula of platinic chloride?

**3.** Calculate the weight of platinum in (*a*) 25 gm. of potassium chloroplatinate, (*b*) 1 kg. of ammonium chloroplatinate, and (*c*) 500 mg. of barium platinocyanide ($BaPt(CN)_4$).

# CHAPTER XXXIII

## RADIUM AND RADIOACTIVITY

**523. Occurrence of Radium.**—Radium is a constituent of certain rare, uranium-bearing minerals, especially pitchblende and carnotite. Pitchblende is found in Bohemia and carnotite in Colorado and Utah.

**524. Preparation of Radium Compounds.** — The proportion of radium in pitchblende and carnotite is minute, only a few milligrams to the ton. This small proportion of radium, together with considerable barium, is carefully extracted from these minerals by a complicated chemical process; the radium is then separated from the barium as radium chloride or bromide by a tedious process of crystallization. Radium is sold usually as radium bromide ($RaBr_2$); the price varies with the purity of the salt, but it is $100 or more a milligram. The supply is exceedingly limited.

**525. Properties of Metallic Radium and Radium Compounds.** — The general properties of radium indicate that it belongs to the alkaline earth family. Metallic radium, which was first isolated by Madame Curie in 1910, closely resembles barium. Both are silvery white metals and have similar spectra. Radium forms a chloride ($RaCl_2$) and a sulphate ($RaSO_4$) whose properties are like those of the corresponding barium compounds. The bromide ($RaBr_2$) is the salt most often used; indeed the actual work has been largely done with this compound and not with metallic radium, despite the fact that the word *radium* is almost exclusively used.

THIS PAGE IS LOCKED TO FREE MEMBERS
Purchase full membership to immediately unlock this page

Get Smart

Over 2,000 years of human knowledge in 797,885 volumes

Instant access $8.99/month

Continue

*Fair usage policy applies

example, if they are brought near a charged body, such as an electroscope, they discharge it. This is a very delicate test and is used to detect radium compounds as well as to determine their proportion in mixtures. The special properties exhibited by radium compounds are called radioactive properties; similar ones are possessed by compounds of other elements, e.g. uranium and thorium. Sometimes these properties are included by the term **radioactivity**.

Fig. 98. — Effect of Radium Compounds upon a Photographic Plate. (This was produced by slowly writing on the plate with a tube containing radium bromide and then developing the plate.)

**527. Discovery of Radium.** — About 1896 it was discovered by Henri Becquerel that uranium compounds affect a light-proof photographic plate. Some minerals containing uranium compounds, particularly pitchblende, were later (1898) found by Madame Curie to be more radioactive than uranium itself. She studied pitchblende carefully and subsequently in collaboration with her husband extracted from this mineral a minute quantity of a new substance which was exceedingly radioactive. The elementary constituent in it was named **radium.** Since then, although very small amounts of radium compounds are available, radioactivity has been zealously studied by Madame Curie, Rutherford, and others.

**528. Interpretation of Radioactivity.** — Many interesting experiments show that radioactivity is due to the spontaneous emission from radium compounds of three types of radiations, which are called alpha ($\alpha$), beta ($\beta$), and gamma ($\gamma$) rays. The **alpha rays** consist of a stream of positively charged particles moving with great velocity — from 10,000 to 20,000 miles a second. To the alpha particles are ascribed most of the electrical effects, such

as discharging an electroscope. They are regarded as being identical with positively charged helium atoms; their weight has been calculated to be about four times that of a hydrogen atom. The **beta rays** carry a negative charge of electricity and move with varying velocity, which is sometimes almost as great as the velocity of light (186,000 miles a second). The beta rays are the most efficient in affecting a photographic plate. They behave like the cathode rays developed in a vacuum tube, i.e. they are streams of electrons or corpuscles — the subatomic particles of the physicist. The **gamma rays** have the least electrical and photographic power, but they are the most penetrating. Gamma rays are not material particles, but pulsations in the ether similar to X rays.

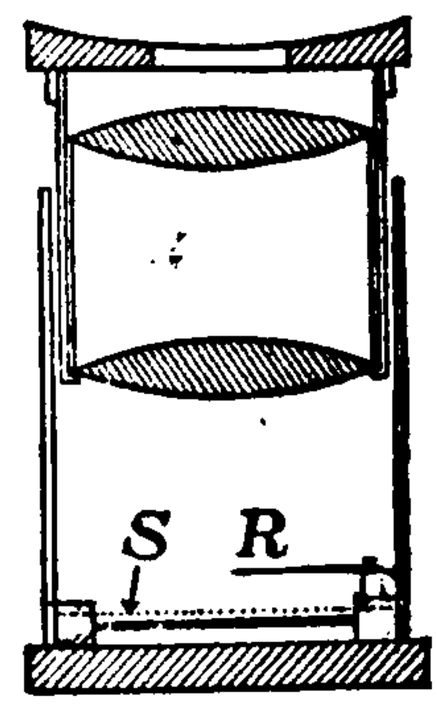

Fig. 99. — Spinthariscope.

A simple instrument called the spinthariscope (Fig. 99) shows in a striking way that particles are being shot off continuously from a radium compound. The screen S is coated with zinc sulphide and on the needle R there is a minute quantity of radium bromide. Upon looking into the spinthariscope through the lens, minute flashes of light are seen on the screen. The flashes are due to the impacts of the steady stream of alpha particles which fall upon the screen and produce fluorescence in the zinc sulphide.

**529. Disintegration of Radium Compounds.**—Although radium is an element which possesses many properties like those of the other eighty or more elementary substances, it differs from most of them in being unstable. That is, radium is slowly disintegrating. It is very generally believed that this disintegration is manifested not only by the unalterable properties included by the term *radioactivity*, but also by the production of radium from uranium and the formation from radium of a series of products.

Uranium, the heaviest of all the elements, is regarded as the parent substance. The others in the series are uranium X, ionium, radium, niton, radium A, B, C, D, E, and F. Some of these substances, all of which are believed to be chemical elements, are very unstable and disintegrate rapidly. Helium is given off in some of the transitions. It is not known what the final products of disintegration are; some evidence indicates that lead is one. The theory has been proposed that atoms of radium and other radioactive elements are slowly disintegrating into simpler atoms and that the disintegration continues until some more or less stable form is reached, e.g. niton and helium. Many observations, among them the experimental demonstration of the production of helium from radium by Ramsay and others, give this theory some foundation.

**530. Other Radioactive Elements.** — Besides uranium and radium, the element thorium is radioactive, though to a much less degree than radium. Much that has been said above about radium compounds applies in general to thorium compounds. Actinium and polonium are radioactive elements.

**531. Conclusion.** — Radium and other radioactive elements are being carefully investigated. The following facts are well established: (1) uranium, thorium, radium, and possibly other elements are undergoing spontaneous decomposition; (2) helium is formed by the decomposition of elements having a higher atomic weight; (3) enormous quantities of energy are liberated in radioactive transformations. Doubtless in the immediate future other facts will be discovered which will enable us to understand more fully the structure of atoms and the relation of elements to each other.

THIS PAGE IS LOCKED TO FREE MEMBERS
Purchase full membership to immediately unlock this page

HISTORY

Tens of thousands of important historical sources, many previously unobtainable, are now available for the first time with a Forgotten Books Full Membership.

Unlimited Access
$8.99/month

Continue

*Fair usage policy applies

# APPENDIX

**1. The Metric System** of weights and measures is used in chemistry. It is based on the *meter*. This is the unit of length, and it is a little longer than a yard. Its exact length is 39.37 inches. The unit of weight is the *gram*. It is a small weight, being only about one thirtieth of an ounce. A five-cent coin weighs approximately five grams. The unit of volume is the *liter*. It is slightly larger than a quart.

TABLE OF THE METRIC SYSTEM

| Length | Weight | Volume | Notation |
|---|---|---|---|
| Kilometer | Kilogram | Kiloliter | 1000. |
| Hectometer | Hectogram | Hectoliter | 100. |
| Decameter | Decagram | Decaliter | 10. |
| METER | GRAM | LITER | 1. |
| Decimeter | Decigram | Deciliter | 0.1 |
| Centimeter | Centigram | Centiliter | 0.01 |
| Millimeter | Milligram | Milliliter | 0.001 |

TABLE OF METRIC EQUIVALENTS

| | | | |
|---|---|---|---|
| 1 meter | = 39.37 inches | 1 inch | = 2.54 centimeters |
| 1 kilometer | = 0.62 mile | 1 mile | = 1.6 kilometers |
| 1 centimeter | = 0.39 inch | 1 cubic inch | = 16.39 cubic centimeters |
| 1 liter | = 0.908 quart (dry) | 1 quart (liq.) | = 0.9465 liter |
| 1 liter | = 1.056 quart (liq.) | 1 pound (avoir.) | = 0.4536 kilogram |
| 1 gram | = 15.432 grains | 1 ounce (avoir.) | = 28.35 grams |
| 1 kilogram | = 2.2 pounds (avoir.) | 1 ounce (troy) | = 31.1 grams |
| 1 metric ton | = 2204 pounds | 1 grain (apoth.) | = 0.0648 gram |

## Table of Metric Conversion

| To Change | Multiply by |
|---|---|
| Inches to centimeters | 2.54 |
| Centimeters to inches | 0.3937 |
| Cubic inches to cubic centimeters | 16.387 |
| Cubic centimeters to cubic inches | 0.061 |
| Ounces to grams (avoir.) | 28.35 |
| Grams to ounces (avoir.) | 0.0353 |
| Grains to grams | 0.0648 |
| Grams to grains | 15.43 |

In the case of water the following relation exists: 1 liter, 1 quart, and 1000 cubic centimeters weigh approximately the same as 1 kilogram, 1000 grams, and 2.2 pounds. Since many liquids have about the same specific gravity as water, this general relation is useful, and should be learned. It is clear from the relation just given that 1 cubic centimeter of water weighs 1 gram — a fact to remember, since this relation enables us to convert volume into weight, and *vice versa*.

The customary abbreviations of the common denominations are: —

| | | |
|---|---|---|
| meter, m. | gram, gm. | milligram, mg. |
| decimeter, dm. | kilogram, kg. or Kg. | cubic centimeter, cc. |
| centimeter, cm. | decigram, dg. | liter, l. |
| millimeter, mm. | centigram, cg. | cubic decimeter, cu. dm. |

The same abbreviation is used for singular and plural, e.g. 1 m., 4 gm., 3 cm., 50 cc.

**2. The Thermometer** in scientific use is the centigrade. The boiling point of water on this thermometer is marked 100, and the freezing point 0. The equal spaces between these points are called degrees. The abbreviation for centigrade is C., and for degrees is °. Thus, the boiling point of water is 100° C. Degrees below zero are always designated as minus, e.g. — 12° C. means 12 degrees below zero.

The thermometer in popular use is the Fahrenheit. On this instrument the boiling point of water is 212° and the freezing point is 32° above zero.

To change Fahrenheit degrees into the equivalent centigrade degrees, subtract 32 and multiply the remainder by $\frac{5}{9}$, or briefly —

$$C = \frac{5}{9}(F - 32).$$

To change centigrade degrees into the equivalent Fahrenheit degrees, multiply by $\frac{9}{5}$ and add 32 to the product, or briefly —

$$F = \frac{9}{5}C + 32$$

The point − 273° C. is called absolute zero. Absolute temperature is reckoned from this point. Degrees on the absolute scale are found by adding 273 to the readings on the centigrade thermometer. Thus, 273° absolute is 0° C., 274° absolute is + 1° C., etc.

## PROBLEMS

**1.** Change into Fahrenheit readings the following centigrade readings: (*a*) 40, (*b*) 25, (*c*) 87, (*d*) −20, (*e*) 0, (*f*) 120, (*g*) 862, (*h*) −40.

**2.** Change into centigrade readings the following Fahrenheit readings: (*a*) 210, (*b*) 18, (*c*) 0, (*d*) −20, (*e*) 212, (*f*) 70, (*g*) −40, (*h*) 127.

**3.** Express the following centigrade readings in absolute readings: (*a*) 0, (*b*) 100, (*c*) −23, (*d*) 250.

**3. Weights of Gases.** — The weight in grams of one liter of gases at 0° C. and 760 mm. is —

| | | | |
|---|---|---|---|
| Acetylene | 1.162 | Hydrogen chloride | 1.64 |
| Air | 1.293 | Hydrogen sulphide | 1.537 |
| Ammonia | .77 | Methane | .717 |
| Carbon dioxide | 1.977 | Nitric oxide | 1.34 |
| Carbon monoxide | 1.25 | Nitrogen | 1.25 |
| Chlorine | 3.22 | Nitrous oxide | 1.977 |
| Ethylene | 1.25 | Oxygen | 1.429 |
| Hydrogen | .0898 | Sulphur dioxide | 2.927 |

**4. The Vapor Pressure** of water vapor in millimeters of mercury is as follows: —

THIS PAGE IS LOCKED TO FREE MEMBERS
Purchase full membership to immediately unlock this page

Get Smart

Over 2,000 years of human knowledge in 797,885 volumes

Instant access $8.99/month

Continue

*Fair usage policy applies

# INDEX


Absolute alcohol, 203.
Acetic acid, 204.
  Glacial, 204.
  Test, 207.
Acetone, 214.
Acetylene, 172, 391.
  Burner, 173.
  Flame, 173.
  From carbide, 178.
  Generator, 173.
Acid calcium carbonate, 166.
Acid, defined, 143.
  Phosphate, 279.
  Reaction, 82.
  Steel, 344.
Acidity, 145.
Acids, 79, 81.
  Dibasic, 145.
  Dissociation, 151.
  General properties, 142.
  Monobasic, 145.
  Names, 84.
  Salts, 145.
  Tests, 82.
  Tribasic, 145.
Actinium, 386.
Agate ware, 246.
Air, 104, 391.
  A mixture, 105.
  Composition, 106.
  Liquid, 109.
  Nitric acid, 94.
  *See* Atmosphere.
  Weight of liter, 105, 390.
Albumin, 212.
  And mercury, 362.
Albuminoids, 212.
Alchemists, 80.
Alcohol, 202.
  Absolute, 203.
  And water, 43.
  Beverages, 204.
  Denatured, 203.
  Ethyl, 202.
  Fermentation, 203.
  Grain, 202.
  Manufacture, 203.
  Methyl, 202.
  Wood, 202.
Alizarin, 176.
Alkali metals, 288, 300.
Alkaline earth metals, 318.
Alkaline reaction, 83.
Allotropism, 161.
  Carbon, 161.
Allotropy, 161.
Alloys, antimony, 284.
  Chromium, 374.
  Copper, 307.
  Lead, 370.
  Silver, 311.
  Steel, 346.
  Tin, 366.
Alpha particles, 384.
Alum, 333.
  And water, 37.
  Baking powder, 334.
  Chromium, 376.
  Iron, 349.
Alumina, 331.
Aluminates, 332.
Aluminium, 328.
  Bronze, 307.
  Chloride, 334.
  Cleaning by, 311.
  Hydroxide, 332.
  Metallurgy, 328.
  Oxide, 328, 331.
  Properties, 329.
  Sulphate, 333.
  Test, 332.
  Uses, 330.
Aluminum. *See* Aluminium.
Alundum, 332.

Amalgamation process, silver, 309.
Amalgams, 361.
Ammonia, 89, 391.
As refrigerant, 92.
Composition, 91.
Formation, 89.
Liquid, 90, 92.
Preparation, 89, 90.
Properties, 90, 91.
Test, 90, 91.
Water, 90.
Ammoniacal liquor, 89.
Ammonium, 94, 300.
As metal, 94.
Carbonate, 302.
Chloride, 91, 300.
Chloroplatinate, 381.
Compounds, 93, 94, 300.
Dichromate, 87.
Ferric citrate, 350.
Hydroxide, 93.
Nitrate, 301.
Sulphate, 301.
Test, 300.
Amorphous, carbon, 154, 157.
Sulphur, 229.
An atmosphere, 104.
Anæsthetic, 172, 214.
Nitrous oxide, 101.
Anhydride, 42, 166.
Anhydrite, 323.
Anhydrous compounds, 46.
Aniline, 176.
Animal charcoal, 159, 160.
Anions, 137, 149.
And anode, 149.
Anode, 137.
Anthracene, 176.
Anthracite coal, 157.
Antimony, 283.
Alloys, 284.
Compounds, 283, 284.
Test, 284.
Apatite, 266.
*Aqua fortis*, 98.
*Regia*, 80.
Argol, 206.
Argon, 108, 355.
And nitrogen, 105.
Atom in molecule, 123.
Discovery, 108.
Aristotle, 104.
Arrhenius, 137.
Arsenic, 282.
Compounds, 282, 283.
Test, 283.
White, 282.
Arsenious oxide, 282.
Arsenopyrite, 282.
Arsine, 283.
Asbestos, 354.
Atmosphere, 86, 104.
Ingredients, 105.
Rare gases, 109.
Atmospheric pressure, 104, 105.
Atom and radicals, 83.
And radioactivity, 58.
Weight, 60.
Atomic theory, 57.
And chemical change, 58.
And laws, 58.
Atomic weight, 57.
And valence, 132.
Problems, 125.
Atomic weights, 60.
Approximate, 116.
Determination, 116–120.
Formula, 62.
International, 120.
Symbols, 60.
Table, inside back cover.
Atoms, 57.
And ions, 137.
In molecule, 115, 116, 123.
Automatic sprinkler, 285.
Avogadro's hypothesis, 114, 115, 117.
Azurite, 303, 309.

Babbitt metal, 370.
Bacteria, 88.
In soil, 88, 98.
Baking powder, 206, 293.
Phosphate, 279.
Tartrate, 206.
Balancing equations, 68.
Balard, 270.

Barium, 325.
Compounds, 326.
Test, 326.
Barometer, 104, 105.
Base, 83.
Defined, 143.
Diacid, 145.
Dissociation, 151.
General properties, 142.
Monacid, 145.
Names, 84.
Triacid, 145.
Basic, salt, 145.
Steel, 344.
Basicity, 145.
Bauxite, 328.
Beer, 204.
Beet sugar, 194.
Benzaldehyde, 214.
Benzene, 122, 176.
Benzine, 122, 175, 176.
Benzol, 176.
Berthollet, 56.
Bessemer steel, 343.
Beta particles, 385.
Bismuth, 284.
Alloys, 285.
Compounds, 286.
Test, 286.
Bitter almonds, 214.
Bittern, 270.
Bituminous coal, 157.
Bivalent element, 127.
Black damp, 171.
Lead, 155.
Blast furnace, 339.
Blasting gelatin, 210.
Bleaching by chlorine, 75, 76.
Hydrogen dioxide, 54.
Sulphur dioxide, 233.
Bleaching powder, 75.
Blood, 213.
And carbon monoxide, 169.
Blowpipe, 191.
Acetylene, 173.
Flame, 191.
Oxy-hydrogen, 27.
Blue print paper, 350.
Blue stone, 308.
Bluing, 351.
Body, elements in, 8.
Boiling point, solutions, 139.
Bomb calorimeter, 220.
Bone black, 160.
Bones, 275, 280.
Borax, 245.
Beads, 246.
Test, 247.
Bordeaux mixture, 308.
Boric acid, 246.
Boron, 245.
Oxides, 245.
Test, 247.
Bort, 155.
Boyle's law, 32.
Brandy, 204.
Brass, 307.
Bread, and dextrin, 200.
Composition, 215.
Making, 199.
Brimstone, 227.
Brine, 77, 92.
Britannia metal, 367.
Bromides, 270.
Bromine, 269.
Compounds, 270.
Water, 270.
Bronze, 307.
Bunsen, 188.
Burner, 188.
Flame, 188, 189, 190.
Bureau of Mines, 20.
Burettes, 144.
Butter, 209.
Acids, 205.
Composition, 215.
Fat, 209.
Butyric acid, 205, 209.

Cadmium, 360.
Atom in molecule, 123.
Caffeine, 214.
Calcite, 319.
Calcium, 318.
Acid sulphite, 234.
Carbide, 178.

THIS PAGE IS LOCKED TO FREE MEMBERS
Purchase full membership to immediately unlock this page

HISTORY

Tens of thousands of important historical sources, many previously unobtainable, are now available for the first time with a Forgotten Books Full Membership.

Unlimited Access
$8.99/month

Continue

*Fair usage policy applies

Chemical change, substitution, 24.
Chemical properties, 4.
Reaction, 65.
Chemistry, 1.
Chile saltpeter, 295.
Chinese white, 359.
Chloride of lime, 76.
Chlorides, 75, 77, 80.
Names, 81.
Test, 81.
Chlorination process, 314.
Chlorine, 73, 390.
And ammonia, 91.
Atomic weight, 119.
Manufacture, 294.
Molecular formula, 123.
Preparation, 73.
Properties, 74, 75.
Water, 74.
Chloroform, 172.
Chlorophyl, 165, 337.
Chocolate, 214.
Choke damp, 171.
Chrome iron ore, 374.
Chromic acid, 377.
Chromite, 374.
Chromium, 374.
Alum, 376.
Compounds, 373, 374, 376.
Preparation, 330.
Steel, 374.
Test, 375, 376.
Cider, 205.
Cinnabar, 360, 363.
Citric acid, 207.
Clay, 328, 335.
Coal, 157.
Anthracite, 157.
Bituminous, 157.
Calorific value, 157.
Composition, 157.
Fire, 168.
Formation, 158.
Lignite, 157.
Soft, 89.
Tar, 176, 182.
Coal gas, 181.
Manufacture, 181.
Cobalt, 351.
Compounds, 351, 352.
Test, 352.
Cocoa, 214.
Coffee, 214.
Coke, 160, 176.
Ovens, 90.
Cold storage, 92, 93.
Colemanite, 245.
Collagen, 212.
Collodion, 201.
Colloids, silicic acid, 254.
Combination, 15.
Valence, 129.
Combining number, 133.
Weight, 133.
Combustion, 16, 162.
Spontaneous, 16.
Common salt, 290.
Deliquescence, 47.
Composition, air, 106.
Ammonia, 91.
Constant, 59.
Gases, 113.
Hydrogen chloride, 80.
Nitric acid, 97.
Nitric oxide, 102.
Nitrous oxide, 101.
Percentage, 62, 63.
Water, 23.
Compound, defined, 5.
Concentration, ore, 304.
Concrete, 322.
Condenser, water, 37, 38.
Conservation, energy, 221.
Matter, 55, 58.
Constant composition, 55, 59.
Converter, copper, 305.
Iron, 343.
Cooking food, 224.
Copper, 303.
Alloys, 307.
And nitric acid, 98.
And sulphuric acid, 232, 240.
Blister, 305.
Compounds, 303, 307, 308.
Electrolytic, 305.
Metallurgy, 303.

Copper, nitrate, 98, 308.
Ores, 303.
Oxides, 308.
Properties, 306.
Refining, 305.
Sulphate, 308.
Sulphide, 308.
Tests, 306.
Uses, 307.
Copper nitrate, 98, 308.
Copper sulphate, 308.
Anhydrous, 308.
Electrolysis, 149, 305.
Fehling's solution, 197.
Hydrolysis, 147.
Copperas, 348.
Coquina, 320.
Cordite, 210.
Corpuscles, 385.
Corrosive sublimate, 362.
Corundum, 331.
Cosmetics, 286.
Cotton seed oil, 209, 210.
Courtois, 271.
Cream of tartar, 206.
Crocus, 347.
Cryolite, 266, 328.
Crystallization, 44.
Crystals, 44.
Cullinan diamond, 155.
Cupric sulphate, 308.
Cuprous oxide, 197.
Curie, Madame, 384.
Cyanide process, 314.
Cyanogen, 179.
Compounds, 350.

Dalton, 57.
Davy, 74, 101, 171, 272, 288, 296.
Decomposition, 13.
Double, 65.
Decrepitation, 290.
Deflagration, 100.
Deliquescence, 47.
Denatured alcohol, 203.
Desiccator, 47.
Dew point, 106.
Dewar flask, 110, 197.
Dextrin, 200.
Dextrose, 195.
Reducing by, 196.
Test, 197.
Diamond, 154, 177, 383.
Diastase, 198.
Diatoms, 249.
Dibasic acid, 145.
Diffusion, 24.
Disinfectant, 214.
Displacement, 24.
Dissociation, electrolytic, 137.
Acids, bases, salts, 151.
Distillation, destructive, 160.
Fractional, 175.
Water, 37.
Divalent element, 127.
Dolomite, 354, 357.
Double decomposition, 65.
Dulong and Petit, 119.
Dyad, 127, 129.
Dyeing, 334.
Dynamite, 210.

Earthenware, 336.
Earth's crust, 8.
Effervescence, 42.
Efflorescence, 46, 47.
Eggs, 212.
Decayed, 229.
Preserving, 253.
Electric furnace, 177, 178.
Calcium carbide, 178.
Carbon disulphide, 243.
Phosphorus, 276.
Electricity and solutions, 136.
Electrodes, 137.
And ions, 149.
Electrolysis, 148, 150.
Aluminium oxide, 328.
Calcium chloride, 318.
Carnallite, 354.
Copper sulphate, 149, 305.
Gold, 315.
Illustrations, 148.
Interpretation, 148.
Lead, 369.
Sodium chloride, 73, 293.

Electrolytes, 136.
And electrolysis, 148.
Boiling point, 139.
Chemical behavior, 140.
Freezing point, 139.
Electrolytic cell, 148.
Electrolytic dissociation, 137.
Acids, bases, salts, 137, 151.
And salts, 146.
Facts, 139.
Electrons, 385.
Electroplating, 151.
Electro-silicon, 251.
Electrotyping, 150, 156.
Element, 6.
And atoms, 57.
Elements, classification, 259.
Distribution, 7, 8.
In body, 8, 218.
Inert, 87.
Molecular formulas, 123.
Molecular weights, 123.
Radioactive, 386.
Table 7, inside back cover.
Emery, 331.
Energy, conservation, 221.
From food, 218.
Enzymes, 196, 216.
Epsom salts, 356.
Equations, 65–70, 123, 124.
Ionic, 141.
Thermal, 161.
Volumetric, 124.
Equivalents, 132–134.
Esters, 207.
Fats, 208
Etching, 268.
Ether, 214.
And water, 43.
Ethyl, 193.
Acetate, 207.
Alcohol, 202, 203, 207.
Ether, 214.
Ethylene, 172, 391.
Explosions, coal mine, 171.

Factors, 66.
Fat, 208.
Fat, digestion, 217.
Fehling's solution, 197.
Fermentation, 163, 196.
Acetic, 205.
Alcoholic, 196, 203.
Lactic, 198.
Maltose, 198.
Sugar, 196.
Ferric chloride, 349.
Compounds, 347.
Ferrocyanide, 350.
Hydroxide, 348.
Oxide, 347.
Sulphate, 348.
Sulphide, 349.
Sulphocyanate, 351.
Ferrite, iron, 348.
Ferrochrome, 346, 374.
Ferrosilicon, 346.
Ferrous compounds, 347.
Carbonate, 349.
Chloride, 349.
Ferricyanide, 350.
Hydroxide, 348.
Oxide, 347.
Sulphate, 348.
Sulphide, 349.
Fertilizer, nitrogen, 88, 94.
Calcium nitrate, 94.
Cyanamide, 325.
Phosphate, 281.
Potassium, 300.
Sodium nitrate, 295.
Fertilizers, calcium, 325.
Filter, water, 37.
Fire damp, 170.
Fire extinguisher, 77, 164.
Fireproof door, 285.
Fireworks, 298, 325, 326.
Fixation of nitrogen, 88.
Flame, 185.
Acetylene, 173.
Bunsen, 188.
Candle, 186.
Cooled, 188.
Hydrogen, 25, 27, 188.
Luminous, 186, 187, 188
Nature, 185.

THIS PAGE IS LOCKED TO FREE MEMBERS
Purchase full membership to immediately unlock this page

Get Smart

Over 2,000 years of human knowledge in 797,885 volumes

Instant access $8.99/month

Continue

*Fair usage policy applies

Gold, plating, 316.
Test, 316.
Grape juice, 206.
Grape sugar, 196.
Graphite, 155.
Manufactured, 156.
Green fire, 326.
Groups, periodic, 262.
Guano, 281.
Gun cotton, 201.
Gun metal, 307.
Gunpowder, 201, 297.
Gypsum, 323.

Halogen family, 266, 273.
Hard water, 167, 324.
Magnesium, 356.
Hardness of water, 324.
Heat of neutralization, 144.
Helium, 109.
And radium, 386.
Helmet, oxygen, 19.
Hemaglobin, 213.
Hematin, 213.
Hematite, 337.
Hexad, 127.
Hexavalent element, 127.
Hydrates, 46.
Hydriodic acid, 273.
Hydrobromic acid, 270.
Hydrocarbons, 170.
Hydrochloric acid, 77.
Commercial, 78.
Electrolysis, 148.
Preparation, 77.
Properties, 78, 79.
Test, 81, 90, 91, 142.
Hydrocyanic acid, 179.
Hydrofluoric acid, 267.
Hydrofluosilicic acid, 255.
Hydrogen, 22, 390.
And electrolysis, 149, 150.
And nitric acid, 98.
Burning, 25, 26.
Explosion, 26.
Flame, 25, 27, 75.
From sodium hydroxide, 289.
Ions, 143.
Molecular formula, 123.
Name, 24.
Occurrence, 28.
Preparation, 22, 23, 24.
Properties, 24, 25.
Reduction by, 26.
Replacing, 145.
Test, 27.
Uses, 27.
Hydrogen chloride, 77, 78, 390.
Composition, 80.
Formula, 120.
Test, 79, 90, 91.
Hydrogen dioxide, 54.
Formula, 121.
Hydrogen fluoride, 267.
Hydrogen sulphide, 229, 390.
Test, 231.
Water, 230.
Hydrolysis, 147.
Aluminium, 333.
Antimony, 284.
Bismuth, 286.
Copper sulphate, 308.
Maltose, 198.
Sodium carbonate, 292.
Sugar, 195.
Hydroquinone, 313.
Hydrosulphuric acid, 230.
Hydroxides, 83.
Hydroxyl, 83.
Groups, 145.
Ions, 143.
Hyposulphite, 313.

Ice, 38.
Making, 92, 93.
Iceland spar, 319.
Illuminating gas, 181.
Candle power, 184.
Composition, 184.
Infusorial earth, 249, 251.
Ingots, 344.
Ink, indelible, 312.
Spots, 205.
Writing, 348.
Insecticides, 283.
Sulphur, 229.

Invertase, 196.
Iodides, 273.
Iodine, 271.
Compounds, 273.
Molecular weight, 123.
Test, 272.
**Iodoform, 172.**
Ionic equation, 141.
Ionium, 386.
Ionization, 151.
Per cent, 151.
Table, 151.
Ions, 137, 138.
And atoms, 137.
Kinds, 137.
Migration, 149.
Representation, 138.
Simple, 152.
Solutions, 140.
Table, 151, 152.
Iridium, 381.
Iron, 337.
Alum, 349.
Cast, 338, 340.
Chlorides, 349.
Compounds, 337, 347.
Cyanides, 349.
Ferrite, 348.
Galvanized, 358.
Hydroxides, 348.
Metallurgy, 338.
Ores, 335.
Oxides, 347.
Pig, 340.
Pure, 337.
Russia, 348.
Rust, 338.
Stains, 205.
Sulphates, 348.
Sulphides, 349.
Tests, 350.
Varieties, 338.
Wrought, 341.
Isomerism, 197.
Ivory black, 160.

Jelly making, 202.
Junket, 213.

Kainite, 296.
Kaolin, 335.
Keratins, 212.
Kerosene, 175.
Flashing point, 175.
Kieserite, 354, 356.
Kilogram, 388, 389.
Kindling temperature, 17.
Kipp apparatus, 22.
Krypton, 109.

Lactic acid, 198, 206, 213.
Lactose, 197.
Lampblack, 161.
Lard, 208, 210.
Laughing gas, 101.
Lavoisier, 17, 23, 87.
Law, 55.
Boyle, 32.
Charles, 31.
Conservation of energy, 221.
Conservation of matter, 55, 58.
Constant composition, 55, 59.
Definite proportions, 56.
Dulong and Petit, 119.
Gay-Lussac, 114, 115.
Multiple proportions, 56, 59.
Periodic, 263, 264.
Specific heat, 119.
Lead, 367.
Acetate, 372, 373.
Alloys, 370.
And radium, 386.
Arsenate, 283.
Black, 155, 368, 369.
Carbonate, 371.
Chloride, 372.
Chromate, 373, 374, 376.
Compounds, 368, 369, 372.
Dioxide, 371.
Fluosilicate, 369.
Metallurgy, 368.
Monoxide, 370.
Nitrate, 372.
Oxides, 370.
Pencils, 156.
Properties, 369.
Sulphate, 372.

Lead, tests, 372, 373.
Tetroxide, 370.
Uses, 370.
White, 371.
Le Blanc process, 291.
Legumes and nitrogen, 88.
Lemonade, 207.
Levulose, 196.
Life and nitrogen, 88.
And carbon dioxide, 164.
And oxygen, 18.
Lignite, 157.
Lime, 320.
And water, 41.
Hydraulic, 322.
Light, 28.
Milk of, 323.
Phosphate, 281.
Limekiln, 321.
Limestone, 319, 320.
Solution, 166, 167.
Limewater, 323.
Limonite, 337.
Liquid air, 109.
Liter of gases, weight, 390.
Litharge, 370.
Litmus, 82, 83.
And salts, 146.
Loadstone, 348.
Lockyer, 109.
Lubricating oil, 175.

Magnalium, 331.
Magnesia, 356, 357.
Alba, 357.
Magnesite, 357.
Magnesium, 354.
Bromide, 269.
Carbonate, 354, 357.
Chloride, 356.
Compounds, 354.
Hard water, 324.
Hydroxide, 356.
Nitride, 87, 91, 355.
Oxide, 355, 356.
Sulphate, 356.
Test, 357.
Magnetite, 337, 348.
Malachite, 303, 309.
Malic acid, 206.
Malt, 198.
Maltose, 198.
Manganese, 377.
Compounds, 377, 378.
Dioxide, 377.
Steel, 346.
Test, 378.
Marble, 319.
Marsh gas, 170.
Matches, 14, 280, 298.
Matte, 304.
Mendelejeff, 264.
Mercuric compounds, 362, 363.
Mercurous compounds, 362, 363.
Mercury, 360.
Alloys, 361.
Atom in molecule, 123.
Chlorides, 362.
Compounds, 360, 362.
Nitrates, 363.
Oxide, 11, 12, 362.
Poisoning, 362.
Properties, 361.
Tests, 362, 367.
Uses, 361.
Metabolism, 216.
Metal and non-metal, 259, 260.
Metalloids, 259.
Metals, 259, 260.
Alkali, 288, 300.
Alkaline earth, 318.
Displacement, 316.
Electrothermal, 316.
Fusible, 285.
Metaphosphoric acid, 278.
Metasilicic acid, 252.
Methane, 170, 391.
Methyl, 193.
Methyl alcohol, 202.
Metric system, 388.
Mexican onyx, 320.
Migration of ions, 149.
Milk, 197, 209.
Casein, 213.
Composition, 215.
Sour, 206.

THIS PAGE IS LOCKED TO FREE MEMBERS
Purchase full membership to immediately unlock this page

HISTORY

Tens of thousands of important historical sources, many previously unobtainable, are now available for the first time with a Forgotten Books Full Membership.

Unlimited Access
$8.99/month

Continue

*Fair usage policy applies

Nitrous oxide, 100, 302, 390.
Composition, 101.
Non-electrolytes, 136.
Boiling point, 139.
Freezing point, 139.
Non-metals, 259, 260.
Normal pressure, 104.
Normal salts, 145.
Nutrients, 215.
Comparative cost, 224.
Table, 223.
Nutrition, 214, 215.

Occlusion, 24.
Ocean, composition, 8.
Water, 36.
Oils, mineral, 176.
Natural, 208.
Oleic acid, 205.
Olein, 208.
Oleomargarin, 209.
Olive oil, 205, 208, 210.
Opal, 249.
Open-hearth process, 344.
Orange mineral, 371.
Ores, 303.
Treatment, 304.
Organic compounds, 193.
Orpiment, 282.
Orthophosphoric acid, 278.
Orthosilicic acids, 252.
Osmiridium, 381.
Osmium, 381.
Oxalic acid, 206.
Oxidation, 15, 76, 367.
And combustion, 16.
And reduction, 26, 27.
Blood, 213.
Flame, 190.
In body, 162.
Oxides, 15.
Oxidizing agent, 15.
*Aqua regia*, 97.
Chromic acid, 377.
Fuming nitric acid, 102.
Nitric acid, 96.
Oxidizing flame, 190, 191.
Oxygen, 11, 390.
And blood, 213.
And electrolysis, 150.
And life, 18, 213.
And vapor density, 115.
Atoms in molecule, 115, 116.
Cycle, 165.
Equivalent weight, 132.
From sodium hydroxide, 289.
Helmet, 19.
In air, 105, 106.
In liquid air, 110, 111.
In water, 74.
Molecular formula, 123.
Molecule, 115.
Name, 17.
Occurrence, 11.
Preparation, 11.
Properties, 13, 14.
Test, 14.
Uses, 18.
Weight of liter, 33, 390.
Oxy-acetylene flame, 173.
Oxy-hydrogen, blowpipe, 27.
Flame, 27.
Ozone, 20.

Paint, 326, 371.
Palladium, 24, 381.
Palmitin, 208.
Palm oil, 210.
Paper, 201.
Paraffin, 176.
Paris green, 283.
Parkes process, 310.
Pearlash, 299.
Pectic acid, 202.
Pectin, 202.
Pectocellulose, 202.
Pentad, 127, 129.
Pentavalent element, 127.
Percentage composition, 62, 63.
Periodic classification, 260.
Families, 262.
Halogens, 273.
Law, 263.
Table, 261.
Permanent hardness, 324.
Petroleum, 174.

Petroleum, ether, 175.
Pewter, 367.
Phenol, 176.
Phlogiston, 17.
Phosphate 281.
Rock, 281.
Test, 279.
Phosphates, 275, 279, 280, 281.
Phosphoproteins, 213.
Phosphoric acid, 278, 281.
Phosphorus, 275.
And air, 86.
And life, 218, 280.
And oxygen, 14.
Compounds, 279.
Fertilizer, 281.
Matches, 280.
Molecular weight, 123.
Ordinary, 276.
Oxides, 277.
Pentoxide, 86.
Red, 277.
Yellow, 276.
Photography, 242, 312, 350.
Radium, 383.
Physical change, 2.
Physical properties, 4.
Picromerite, 296.
Pig iron, 340.
Pins, 366.
Pintsch gas, 181.
Pitchblende, 382.
Plants, and nitrogen, 88.
And carbon dioxide, 163.
Plaster, 323.
Of Paris, 323.
Platinum, 380.
Compounds, 381.
Metals, 380, 381.
Plumbago, 155.
Polariscope, 197.
Polonium, 386.
Porcelain, 335.
Positive electrode, 137.
Portland cement, 322.
Potash, 299.
Caustic, 299.
Potassium, 295.
And life, 299.
And water, 23.
Atom in molecule, 123.
Carbonate, 298.
Chlorate, 298.
Chloride, 296.
Chloroplatinate, 381.
Chromate, 374, 375.
Cyanide, 179, 299.
Dichromate, 374, 375.
Ferricyanide, 350.
Ferrocyanide, 350.
Hydroxide, 299.
Manganate, 378.
Nitrate, 296.
Nitrite, 100, 297.
Permanganate, 378.
Sulphate, 299.
Test, 296.
Precipitate, 81.
Precipitation, 81.
Pressure, normal, 30.
Standard, 30.
Priestley, 11.
Producer gas, 168.
Products, equation, 67.
Properties, 1, 4.
Protamins, 212.
Proteid, 211.
Protein, 211.
Composition, 211.
Digestion, 217.
Function, 217.
Groups, 211.
Nitrogen in, 86.
Plants, 98.
Proust, 55.
Prussian blue, 350.
Prussic acid, 179.
Puddling, 341.
Pulmotor, 19.
And carbon monoxide, 169.
Purple of Cassius, 316.
Pyrene fire extinguisher, 77.
Pyroligneous acid, 204.
Pyrophosphoric acid, 278.
Pyrosulphuric acid, 242.

Quadrivalent element, 127.
Quartation, 314.
Quartz, 249.
Vessels, 250, 251.
Quicklime, 322.
Quicksilver, 360.
Quinquivalent element, 127.

Radical, 83.
Ammonium, 94.
Organic, 193.
Valence, 128.
Radioactivity, 383, 384, 385.
And atoms, 58.
Radium, 382.
Compounds, 382.
Discovery, 384.
Disintegration, 385.
Products, 386.
Ramsay, 108.
Rayleigh, 108.
Reaction, 65, 69.
Acid, 82.
Alkaline, 83.
Basic, 83.
Neutral, 82.
Realgar, 282.
Red fire, 325.
Red lead, 370.
Reducing agent, 26.
Reducing flame, 190, 191.
Reduction, 26, 27, 367.
Carbon, 162.
Carbon monoxide, 169.
Flame, 190.
Relative humidity, 106.
Rennet, 198, 213.
Rennin, 213.
Replacement, 24, 130.
Respiration, 18.
Calorimeter, 220.
Reverberatory furnace, 341.
Richards, 56, 119.
Rocks, 252.
Rose's metal, 285.
Rouge, 347.
Rum, 204.
Rusting, iron, 338.
Rusting tinware, 366.
Rutherford, 87.

Saccharose, 194.
Safety lamp, 171.
Sal ammoniac, 301.
Saleratus, 293.
Sal soda, 291.
Salt, common, 290.
Dairy, 290.
Glauber's, 294.
Saltpeter, 297.
Chile, 271, 295.
Salts, 82.
Acid, 145.
Basic, 145.
Dissociation, 151.
Formation, 145.
General properties, 142.
Names, 84.
Normal, 145.
Preparation, 97, 98.
Properties, 145.
Varied properties, 146.
Sand, 248, 251.
Glass, 255.
*See* Silica.
Seidlitz powder, 206.
Selenite, 323.
Shot, 282.
Siderite, 337.
Silica, 249.
And life, 251.
Yellowstone Park, 254.
Silicates, 251.
Silicic acid, 251.
Colloidal, 254.
Silicides, 248.
Silicon, 248.
Carbide, 177.
Test, 255.
Tetrafluoride, 250, 255, 268.
Silicon dioxide, 249.
Properties, 250.
Uses, 251.
Silver, 309.
Alloys, 311.
And dextrose, 196.

THIS PAGE IS LOCKED TO FREE MEMBERS
Purchase full membership to immediately unlock this page

Get Smart

Over 2,000 years of human knowledge in 797,885 volumes

Instant access $8.99/month

Continue

*Fair usage policy applies

Stalactite, 320.
Stalagmite, 320.
Standard conditions, 30.
Formula, 33.
Standard dietary, 222.
Standard pressure, 104.
Stannic compounds, 367.
Stannous compounds, 367.
Starch, 198.
And alcohol, 203.
Animal, 200.
Baking powder, 206.
Test, 199, 272.
Starching clothes, 200.
Stas, 56.
Stassfurt salts, 354.
Deposits, 296.
Steam, 39.
Stearic acid, fats, 208.
Stearin, 208.
Steel, 342.
Alloys, 346.
And aluminium, 330.
Bessemer, 343.
Cementation, 346.
Composition, 346.
Crucible, 345.
Electric, 346.
Manufacture, 342.
Open hearth, 344.
Properties, 346.
Special, 346.
Uses, 347.
Sterling silver, 311.
Stibnite, 283.
Stove polish, 156.
Strontium, 325.
Compounds, 325.
Test, 326.
Sublimation, 272, 301.
Substances, 1.
Substitution, 24, 145.
Valence, 129.
Sucrose, 194.
Sugar, 194.
Beet, 194.
Cane, 194.
Fermentation, 196, 203.
Grape, 196.
Manufacture, 195.
Milk, 197.
Reducing, 197.
Refining, 195.
Test, 197.
Sulphates, 226, 289.
Acid, 241.
Normal, 241.
Test, 242
Sulphides, 226, 229, 231.
Sulphites, 234.
And sulphur dioxide, 232.
Sulphur, 226.
Amorphous, 228.
Crystals, 228.
Dioxide, 232, 390.
Extraction, 227.
Flowers, 227.
Louisiana, 227.
Modifications, 228.
Molecular weight, 123.
Properties, 227.
Purification, 227.
Roll, 227.
Trioxide, 234.
Uses, 229.
Sulphuretted hydrogen, 229.
Sulphuric acid, 235.
And copper, 232, 240.
Chamber process, 236.
Contact process, 238.
Fuming, 242.
Manufacture, 235–239.
Properties, 239.
Pyro-, 242.
Test, 142, 242.
Uses, 241.
Sulphurous acid, 233.
Superphosphate of lime, 281.
Supersaturation, 45.
Sylvite, 296.
Symbol, 6.
Symbols, 60, inside back cover.

Tallow, 208, 210.
Tar, 176, 182.
Tartar, 206.

Tartar, cream, 206.
Emetic, 284.
Tartaric acid, 206.
Tea, 214.
Temperature, gas volumes, 30, 31.
Normal, 30.
Standard, 30.
Tempering, 347.
Temporary hardness, 324.
Tetrad, 127, 129.
Tetravalent element, 127.
Thein, 214.
Theobromin, 214.
Theory, 55.
Atomic, 57.
Electrolytic dissociation, 137.
Thermal, equation, 161.
Thermit, 330, 331.
Thermometer, 389.
Mercury, 361, 362.
Thermos bottle, 197.
Thomas-Gilchrist process, 344.
Thorium, 373, 386.
Oxide, 190.
Tin, 365.
Alloys, 366.
Block, 38.
Chlorides, 367.
Compounds, 366, 367.
Crystals, 367.
Disease, 366.
Metallurgy, 365.
Oxide, 365, 366, 367.
Plate, 366.
Test, 367.
Travertine, 320.
Triad, 127, 129.
Tribasic acid, 145.
Trivalent element, 127.
Tungsten, 346, 377.
Turnbull's blue, 350.
Tuyères, 339.
Type metal, 284.

Univalent element, 127.
Upward displacement, 89.
Uranium, 377.
And radium, 385, 386.
Urea, 217.

Valence, 126.
And atomic weight, 132.
Atom, 127.
Atomic groups, 127.
Combination, 129.
Element, 127, 128.
Equivalent weight, 132.
Exceptions, 131.
Exercises, 134.
Formulas, 130.
Multiple, 130.
Radicals, 127, 128.
Representation, 127, 131.
Substitution, 129.
Tables, 128.
Terms, 127.
Vanadium steel, 346.
Vanillin, 214.
Vapor density, molecular weight, 115.
And oxygen, 115.
Vapor pressure, 39, 40.
And deliquescence, 47.
And efflorescence, 47.
Formula, 41.
Table, 391.
Temperature, 40.
Vaseline, 176.
Venetian red, 347.
Vermilion, 363.
Vinegar, 204, 205.
Vitriol, blue, 308.
Green, 348.
White, 359.
Volume, and pressure, 30, 32.
And temperature, 30, 31.
Volumetric equation, 124.

Water, 36.
Ammonia, 90.
And alcohol, 43.
And ions, 147.
And sodium, 22, 289.
Chemical properties, 41.
Chlorine, 74.
Composition, 23.

Water, distilled, 37, 38.
Drinking, 36, 37.
Electrolysis, 150.
Filter, 37.
Glass, 253.
Hard, 36, 167, 324, 356.
In body, 217.
Natural, 36.
Neutralization, 143.
Occurrence, 36.
Ocean, 36.
Of crystallization, 46.
Oxygen, 74.
Physical properties, 38.
Purification, 333.
Rain, 36.
River, 36.
Settling, 37, 333.
Soft, 36, 324.
Solvent power, 42.
Vapor in air, 106, 107.
Vapor pressure, 39, 391.
Water gas, 168, 182.
Poisonous, 169, 184.
Weathering, 254.
Weights of gases, 390.
Welding, 18, 174, 342.
Welsbach light, 190.
Mantle, 190, 373.
Whey, 198.
Whisky, 204.
White lead, 371.
Whitewash, 323.
Wine, 204.
Wood alcohol, 202.
Wood, petrified, 249.
Wood's metal, 285.
Writing equations, 67.
Wrought iron, 341.

Xenon, 109.

Yeast, 196.
And alcohol, 203.
And bread, 199.

Zinc, 357.
Alloys, 359.
And nitric acid, 99.
Atoms in a molecule, 123.
Chloride, 359.
Compounds, 357, 359.
Granulated, 358.
Hydroxide, 359.
Metallurgy, 357.
Oxide, 358, 359.
Properties, 358.
Sulphate, 359.
Sulphide, 359, 385.
Tests, 360.
Uses, 358.
White, 359.
Zincates, 358, 360.
Zymase, 196, 203.

THIS PAGE IS LOCKED TO FREE MEMBERS
Purchase full membership to immediately unlock this page

HISTORY

Tens of thousands of important historical sources, many previously unobtainable, are now available for the first time with a Forgotten Books Full Membership.

Unlimited Access
$8.99/month

Continue

*Fair usage policy applies

COPYRIGHT, 1914
BY LYMAN C. NEWELL

IF4

# PREFACE

THE experiments in this book are designed primarily to accompany the author's General Chemistry — Principles and Applications. They are cited throughout that book and are referred to by number as being in Part II. The selection, arrangement, and subdivisions of the experiments are such, however, that teachers will find this book itself serviceable under various conditions.

Teachers should notice several things about the experiments in this book. First, as a whole they are divided into two kinds — regular and supplementary. Second, the regular experiments include not only those acknowledged as of fundamental value in a general course, but also practical and novel experiments which emphasize the relation of chemistry to everyday experiences of students. Third, the supplementary set includes experiments suited for beginners, but varying widely in length, difficulty, and utility. These experiments are just what their name implies — supplementary. They will serve numerous uses: *e.g.* to lay special emphasis on certain principles and applications, to provide additional opportunity to acquire skill in manipulation, to supplement information gained by the regular experiments, to provide illustrative demonstrations for the classroom, to furnish material for individuals who prefer or need special experiments or who are compelled to meet specific requirements, to present attractive laboratory work to students who cannot (or will not) pursue chemistry scientifically, and to stimulate those who are interested in the practical applications of chemistry. Fourth, this

liberal provision for laboratory work not only permits the selection of a sufficient number of experiments adapted to a wide range of equipment, but also enables teachers to accomplish one or more aims, *e.g.* giving general mental training, inculcating the scientific point of view, meeting college preparatory requirements, teaching the fundamental principles of chemistry, emphasizing relations of chemistry to household arts and to industries, and utilizing chemistry as a factor in vocational education. These aims, varied as they seem, can be accomplished by judicious utilization of text and experiment, not only because adequate material is available but also because the text-book and laboratory manual have been made flexible in content and arrangement. On page xiii there are suggestions which will assist teachers in selecting experiments suitable for different kinds of courses.

The directions for performing the early experiments are rather full. Experience has convinced the author that beginners need adequate directions at the outset. The directions for performing the semi-quantitative experiments are also full, for time and annoyance are saved by avoiding repetitions necessitated by inadequate directions.

The Introduction contains directions for preparing, constructing, and arranging apparatus and for performing many general laboratory operations. Students should be required to familiarize themselves with this part of the book and to use it as occasion demands. In the Introduction there will also be found information about the procedure in case of accidents and some suggestions about laboratory note books. Annotated lists of the supplies needed for the experiments will be found at the end of the book.

L. C. N.

BOSTON, MASS.,
May, 1914.

THIS PAGE IS LOCKED TO FREE MEMBERS
Purchase full membership to immediately unlock this page

Get Smart

Over 2,000 years of human knowledge in 797,885 volumes

Instant access $8.99/month

Continue

*Fair usage policy applies

EXPERIMENT PAGE

25 s. Water in Substances . . . . . 37
26 s. Distilled Water . . . . . 37
27 s. Solubility of a Solid . . . . . 38
28 s. Supersaturation . . . . . 39
29. Qualitative Composition of Water . . . . . 40
30. Electrolysis of Water . . . . . 41
31 s. Hydrogen Dioxide . . . . . 42
32 s. Combination of Oxygen with Magnesium . . . . 43
33. Preparation and Properties of Chlorine . . . 45
34. Bleaching Powder . . . . . 47
35. Preparation and Properties of Hydrochloric Acid . . . . . 47
36. Tests for Chlorides . . . . . 49
37. General Properties of Acids . . . . . 49
38. General Properties of Bases . . . . . 50
39. A Property of Many Salts . . . . . 50
40. Neutralization . . . . . 50
41 s. Preparation of Chlorine from Various Substances . . . . . 51
42 s. Preparation of Hydrogen Chloride from Various Substances . . . . . 52
43 s. Aqua Regia . . . . . 52
44 s. Litmus Reaction of Common Substances . . . . 53
45. Preparation and Properties of Nitrogen . . . . 54
46. Ammonia and Ammonium Hydroxide . . . . . 55
47. Preparation of Nitric Acid . . . . . 57
48. Properties of Nitric Acid . . . . . 58
49. Test for Nitric Acid and Nitrates . . . . . 59
50. Nitric Oxide and Nitrogen Dioxide. . . . . 60
51. Properties of Nitrates . . . . . 61
52 s. Preparation of Nitrogen from Various Substances . . . . . 62
53 s. Preparation of Ammonia from Various Substances . . . . . 62
54 s. Interaction of Nitric Acid and Metals . . . . 63
55 s. Sodium Nitrite . . . . . 63
56 s. Preparation and Properties of Nitrous Oxide . . 64
57. Per Cent of Oxygen and Nitrogen in Air . . . 66

EXPERIMENT PAGE

58. Water Vapor in the Air . . . . . 67
59. Carbon Dioxide in the Air . . . . . 68
60 s. Testing Air . . . . . 68
61. Equivalent of Zinc to Hydrogen . . . . . 69
62. Equivalent of Magnesium to Hydrogen . . . . 71
63 s. Equivalent of Iron to Copper . . . . . 72
64 s. Equivalent of Aluminium to Hydrogen . . . . 72
65 s. Equivalent of Calcium to Hydrogen . . . . . 72
66. Chemical Behavior of Electrolytes in Solution 73
67. Chemical Behavior of Electrolytes in Solution 73
68. General Properties of Acids, Bases, and Salts 74
69. Litmus Reaction of Different Salts . . . . . 74
70. Electrolysis of Copper Sulphate . . . . . 74
71. Electrolysis of Sodium Sulphate . . . . . 75
72 s. Electrolytes and Non-Electrolytes . . . . . 76
73 s. Chemical Behavior of Electrolytes in Solution 76
74 s. Electrolysis of Potassium Iodide . . . . . 76
75 s. Electrolysis of Water . . . . . 77
76 s. Colored Ions . . . . . 77
77 s. Migration of Ions . . . . . 77
78 s. Neutralization by Titration . . . . . 78
79 s. Preparation of Salts . . . . . 79
80. Distribution of Carbon . . . . . 81
81. Properties of Coal . . . . . 81
82. Properties of Charcoal . . . . . 82
83. Preparation and Properties of Carbon Dioxide. 83
84. Carbon Dioxide and Respiration . . . . . 84
85. Acid Calcium Carbonate . . . . . 84
86. Testing for Carbonates . . . . . 85
87. Preparation and Properties of Acetylene . . . 85
88 s. Properties of Graphite . . . . . 85
89 s. Preparation of Carbon Dioxide by Different Methods . . . . . 86
90 s. Carbonic Acid . . . . . 87
91 s. Preparation and Properties of Carbon Monoxide . . . . . 87
92 s. Principle of the Davy Safety Lamp . . . . . 88
93 s. Properties of Carbonundum . . . . . 89

| EXPERIMENT | | PAGE |
|---|---|---|
| 94. | Preparation and Properties of Coal Gas | 90 |
| 95. | Candle Flame | 90 |
| 96. | Bunsen Burner and Flame | 91 |
| 97. | Reduction and Oxidation with the Blowpipe | 93 |
| 98 s. | Combustion of Illuminating Gas | 94 |
| 99 s. | By-Products of Illuminating Gas Manufacture | 95 |
| 100 s. | Testing Illuminating Gas | 95 |
| 101 s. | Testing Metals with the Blowpipe | 95 |
| 102 s. | Welsbach Burner, Mantle, and Flame | 95 |
| 103. | Composition of Organic Compounds | 96 |
| 104. | Properties of Sucrose (Cane Sugar) | 96 |
| 105. | Properties of Dextrose (Glucose) | 97 |
| 106. | Fehling's Test for Sugar | 98 |
| 107. | Testing for Glucose | 98 |
| 108. | Properties of Starch | 98 |
| 109. | Properties of Alcohol | 99 |
| 110. | Properties of Acetic Acid | 100 |
| 111. | Test for Acetic Acid | 100 |
| 112. | Properties of Vinegar | 100 |
| 113. | Testing Baking Powder | 100 |
| 114. | General Properties of Fats | 102 |
| 115. | Preparation of Soap | 102 |
| 116. | Properties of Soap | 103 |
| 117. | Composition of Proteins | 103 |
| 118. | Testing for Proteins | 104 |
| 119. | Testing Food | 105 |
| 120. | Testing Flour | 105 |
| 121 s. | Preparation of Invert Sugar from Sucrose | 106 |
| 122 s. | Testing for Sugar in Vegetables and Fruits | 106 |
| 123 s. | Detection of Starch by Iodine | 106 |
| 124 s. | Conversion of Starch into Sugar by an Enzyme | 107 |
| 125 s. | Properties of Dextrin | 107 |
| 126 s. | Guncotton, Collodion, and Celluloid | 107 |
| 127 s. | Preparation and Properties of Ethyl Alcohol | 108 |
| 128 s. | Formaldehyde | 109 |
| 129 s. | Ether | 109 |
| 130. | Physical Properties of Sulphur | 110 |
| 131. | Preparation of Crystallized Sulphur | 110 |

THIS PAGE IS LOCKED TO FREE MEMBERS
Purchase full membership to immediately unlock this page

HISTORY

Tens of thousands of important historical sources, many previously unobtainable, are now available for the first time with a Forgotten Books Full Membership.

Unlimited Access
$8.99/month

Continue

*Fair usage policy applies

EXPERIMENT PAGE

165 s. Properties of Antimony . . . . . 132
166 s. Interaction of Antimony and Acids . . . . . 132
167 s. Properties of Bismuth . . . . . 133
168 s. Bismuth Trichloride . . . . . 133
169 s. Fusible Alloys . . . . . 133
170. Tests for Sodium . . . . . 134
171. Properties of Sodium Chloride . . . . . 134
172. Properties of Sodium Hydroxide . . . . . 135
173. Properties of Potassium . . . . . 135
174. Tests for Potassium . . . . . 136
175. Properties of Ammonium Chloride . . . . . 136
176 s. Properties of Sodium . . . . . 136
177 s. Sodium Bicarbonate . . . . . 137
178 s. Testing for Sodium and Potassium Carbonates . 138
179 s. Potassium Nitrate . . . . . 138
180 s. Properties of Ammonium Compounds . . . . . 138
181. Properties of Copper . . . . . 139
182. Tests for Copper . . . . . 139
183. Properties of Copper Sulphate . . . . . 140
184. Displacement of Metals — Copper . . . . . 140
185. Tests for Silver . . . . . 141
186. Properties of Gold . . . . . 141
187. Test for Gold . . . . . 142
188 s. Tests for Copper in Alloys . . . . . 142
189 s. Cuprous Oxide . . . . . 143
190 s. Deposition of a Silver Film . . . . . 143
191 s. Displacement of Metals — Silver . . . . . 143
192 s. Tarnishing and Cleaning Silver . . . . . 143
193 s. Silver Halides . . . . . 143
194 s. Testing for Copper, Silver, and Gold . . . . . 144
195. Properties of Calcium . . . . . 145
196. Tests for Calcium . . . . . 146
197. Testing for Calcium . . . . . 146
198. Plaster of Paris . . . . . 146
199. Hard Water . . . . . 147
200. Tests for Strontium . . . . . 147
201. Tests for Barium . . . . . 147
202 s. Acid Calcium Carbonate . . . . . 148

EXPERIMENT PAGE

203 s. Calcium Oxide and Hydroxide . . . . . 148
204 s. Red and Green Fire . . . . . 149
205. Properties of Aluminium . . . . . 150
206. Aluminium Hydroxide . . . . . 150
207. Clarification of Water . . . . . 151
208. Thermit . . . . . 151
209. Tests for Aluminium . . . . . 152
210 s. Aluminium Salts as Mordants . . . . . 152
211 s. Potassium Alum . . . . . 152
212 s. Displacement of Metals — Aluminium . . . . . 153
213 s. Equivalent of Aluminium . . . . . 153
214 s. Hydrolysis of Aluminium Salts . . . . . 153
215 s. Alum Baking Powder . . . . . 153
216. Properties of Iron . . . . . 154
217. Ferrous Compounds . . . . . 154
218. Ferric Compounds . . . . . 155
219. Interrelation of Iron Compounds . . . . . 155
220 s. Testing for Iron . . . . . 156
221 s. Blue Print Paper . . . . . 156
222 s. Test for Nickel . . . . . 157
223 s. Test for Cobalt . . . . . 157
224. Tests for Magnesium . . . . . 158
225. Tests for Zinc . . . . . 158
226. Mercurous and Mercuric Compounds . . . . . 159
227 s. Properties of Magnesium and Zinc . . . . . 159
228 s. Equivalent of Magnesium and Zinc . . . . . 159
229 s. Physical Properties of Mercury . . . . . 160
230 s. Displacement — Magnesium, Zinc, and Mercury . 160
231 s. Test for Cadmium . . . . . 160
232. Test for Tin . . . . . 161
233. Tests for Lead . . . . . 161
234 s. Properties of Tin and Lead . . . . . 161
235 s. Displacement — Tin and Lead . . . . . 162
236 s. Testing for Tin and Lead . . . . . 162
237 s. Analysis of Solder . . . . . 162
238 s. Separation of Lead, Silver, and Mercury . . . 163
239. Tests for Chromium . . . . . 164
240. Potassium Chromate and Dichromate . . . . . 164

EXPERIMENT PAGE

**241.** TESTS FOR MANGANESE . . . . . 165
**242 s.** CHROMATES AND CHROMIC COMPOUNDS . . . . . 165
**243 s.** CHROMIC HYDROXIDE . . . . . 166
**244 s.** OXIDATION WITH POTASSIUM PERMANGANATE . . . . 166

LABORATORY EQUIPMENT . . . . . 167

THIS PAGE IS LOCKED TO FREE MEMBERS
Purchase full membership to immediately unlock this page

Get Smart

Over 2,000 years of human knowledge in 797,885 volumes

Instant access $8.99/month

Continue

*Fair usage policy applies

**50, (52s), (53s), (54s), 56, 57, 61 or 64s, 62 or 65s, (63s), (66), (67 or 73s), (68), (70 or 71), 78s, 79s, 80, 81, 82, 83, 84, 85, 88s, (89s), 90s, 91s, (94s), (95s), (96s), (97s), 99s, (104), (105), (106), (108), (109), 111, (112), 115, 116, (117), (118), 119, 120, 127s, 131, 132, 134, (135), 136, 138s, 139s, (144), (152), 153, (155), 156, (157), (158), (159), (160), (170), (171), 172, 176s, 177s, (178s), 179s, (181), 182, 184, (185), (186), (191s), (193s), 196, (197), (198), 199, 200, 201, 203s, (206), (207), 209, (212s), 217, 218, 219, 220s, (223s), (225), (229s), (230s), (235s), 238s.**

List IV — **Practical Course.** This group includes experiments which emphasize the applications of chemistry. The fundamental experiments in List II may be substituted for certain ones in this list; omissions may also be made as time and equipment determine. Numbers **14, 15, 17, 18, 19, (25s), 26s, 31s, 34; 36, 37, 38, 39, 44s, 49, 52s, 53s, 58, 59, 60s, 69, 70, 79s, 80, 81, 82, 83, 86, 87, 88s, (89s), 92s, 93s, 94, 98s, 99s, 100s, 101s, 102s, 106, 107, 111, 112, 113, 115, 116, 118, 119, 120, 122s, 123s, 124s, 126s, 128s, 136, 137, 140s, 150s, 151s, 159, 169s, 171, 172, 175, 177s, 178s, 179s, 180s, 188s, 190s, 192s, 194s, 197, 198, 199, 203s, 204s, 207, 208, 210s, 216, 220s; 221s, 225, 232, 233, 236s, 237s, 238s.**

List V — **Food Experiments.** The fundamental experiments on the chemistry of food are collected in this group. Numbers **14, 25s, 26s, 84, 103, 104, 105, 106, 107, 108, 109, 110, 111, 112, 113, 114, 115, 116, 117, 118, 119, 120, 121s, 122s, 123s, 124s, 125s, 127s.**

List VI — **Quantitative Experiments.** This group includes the experiments that involve accurate weighing and measuring. Numbers **13s, 22, 27s, 32s, 57, 61, 62, 63s, 64s, 65s, 78s, 88s**(*b*), **130**(*b*), **135**(*a*), **146**(*b*), **151s**(*d*), **165s**(*b*), **181**(*c*), **186**(*c*), **213s, 216**(*c*), **228s, 229**(*c*).

List VII — **Demonstration Experiments.** In this group are placed experiments which may be performed by he teacher before the class. Many of these experiments may be used to supplement the individual work suggested in List II or as substitutes for certain experiments in List I. Numbers **4s, 5s, 14, 26s, 28s, 29, 30, 34, 43s, 44s, 47, 48, 50, 66, 67, 68, 70, 71, 72s, 73s, 74s, 76s, 77s, 85, 90s, 92s, 95, 98s, 102s, 127s, 132, 133, 140s, 142, 145s, 148s, 154, 177s, 190s, 192s, 198, 202s, 204s, 207, 208, 210s, 239, 240, 241, 244s.**

# ENTS

THIS PAGE IS LOCKED TO FREE MEMBERS
Purchase full membership to immediately unlock this page

HISTORY

Tens of thousands of important historical sources, many previously unobtainable, are now available for the first time with a Forgotten Books Full Membership.

Unlimited Access
$8.99/month

Continue

*Fair usage policy applies

of a test tube containing a solid should be raised gradually by moving it in and out of the flame, or by holding it in the flame and rolling it slightly between the thumb and forefinger. Special care must be taken to distribute the heat evenly. If the test tube contains a liquid, as is usually the case, only that part containing the liquid should be heated; the test tube should also be inclined so that the greatest heat is not applied to the thin bottom. When the liquid begins to boil, the test tube should be removed from the flame for an instant or held over it. In some experiments test tubes can be held between the thumb and forefinger without discomfort. As a rule a test tube holder should be used (Fig. 100).

**3. Cutting, Bending, and Drawing Glass Tubing.** — (*a*) *Cutting.* Determine the length needed, lay the tube on the desk, and with forward strokes of a triangular file make a short but deep scratch where the tube is to be cut. Grasp the tube in both hands, and hold the thumbs together behind the scratch; now push gently with the thumbs, pull at the same time with the hands, and the tube will break at the desired point. The sharp ends should be smoothed by rubbing them with emery paper or by rotating them slowly in the Bunsen flame until a yellow color is distinctly seen or until the end becomes red-hot.

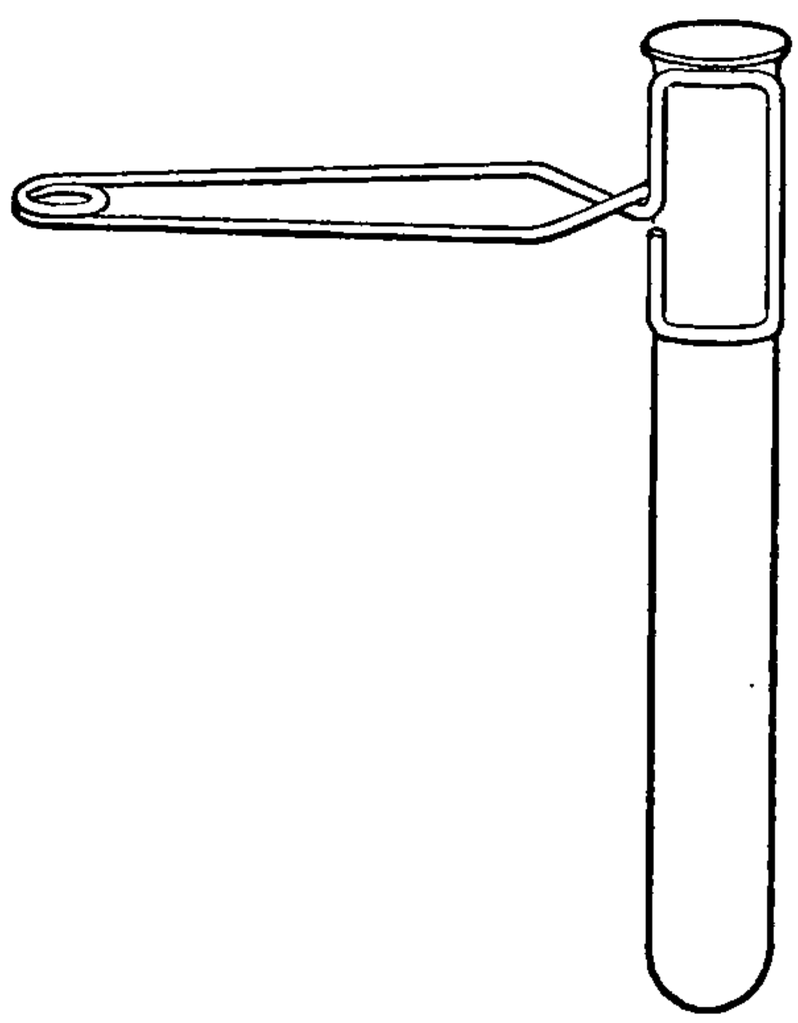

Fig. 100.—Test Tube and Holder.

(*b*) *Bending.* Glass tubes are bent in a flat flame. An ordinary illuminating gas flame may be used, but the Bunsen flame can be flattened by a wing-top attachment, which slips over the top of the burner tube. The flattened Bunsen flame should be slightly yellow and about 7 centimeters (2.5 inches) wide for ordinary bends. A **right-angle bend** is made as follows: Determine the point at which the tube is to be bent. Grasp the tube in both hands, and hold it so that the part to

be bent is directly over the flame. Slowly rotate it between the thumbs and forefingers, and gradually lower it into the flame. Continue to rotate it until the glass feels soft and ready to yield. Then remove it from the flame, and slowly bend it into a right angle. It is convenient to have at hand a block of wood or some other right-angled object to assist the eye in completing the bend into an exact right angle. It is desirable though not always necessary to anneal the bent part of the tube. This is done by holding it in a yellow flame until it becomes coated with soot; it should then be placed on a block of wood, and when cold wiped clean. Tubes can be bent into an **oblique angle** by heating them through about twice the space required for a right angle; a very slight bend, however, is often made by holding the tube across the flame and heating a short space.

(*c*) *Drawing.* Glass tubes can be drawn to a finer bore or into two pointed tubes as follows: Heat the tube as in (*b*) through about 2.5 centimeters (1 inch) of its length, remove from the flame and slowly pull it apart a short distance; let it cool for a few seconds, and then pull it quickly to the desired length. Stirring rods can be made from glass rod in the same way.

**4. Filtering.** — A solid may be separated from a liquid by filtering. A circular piece of porous paper is folded to fit a glass funnel, and when the mixture is poured upon this paper the solid — the residue or precipitate — is retained, while the liquid — the filtrate — passes through and may be caught in a test tube or any other vessel. The filter paper is prepared for the funnel by folding it successively into the shapes shown in Fig. 101— I, II, and then opening the folded paper so that three thicknesses are on one side and one on the other as in III. The cone-shaped paper is next placed in the funnel and moistened with water, so

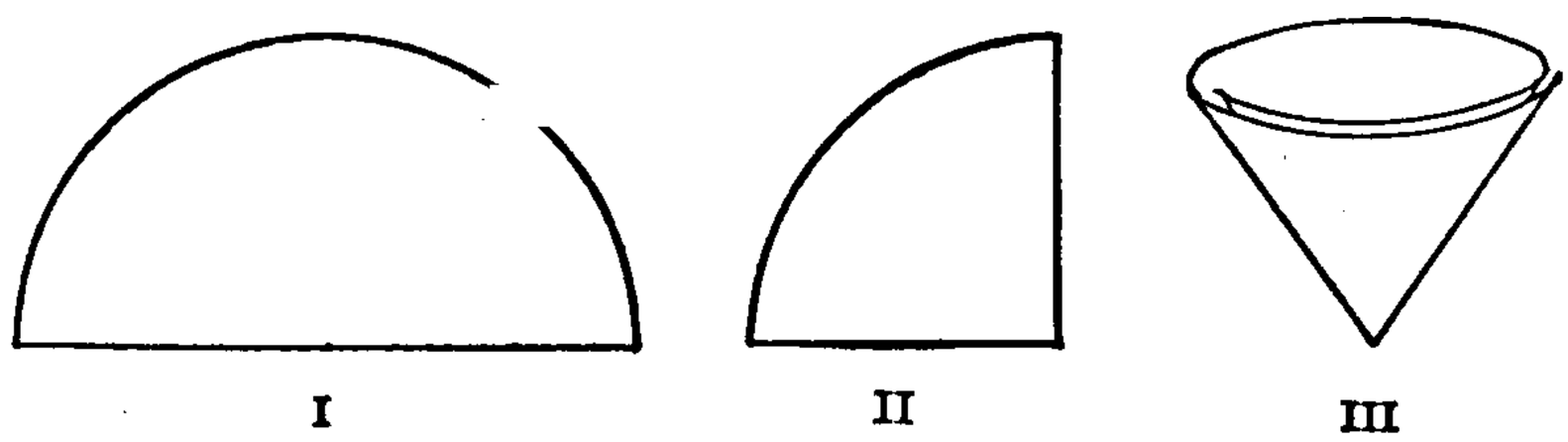

Fig. 101. — Folded Filter Paper.

that it will stick to the sides of the funnel. The liquid to be filtered may be poured directly upon the paper or down a glass rod which touches the edge of the test tube; the lower end of the rod should nearly touch the paper inside the funnel, so the liquid will run down the side and thereby avoid bursting the apex of the filter paper. The funnel can be supported as shown in Fig. 102.

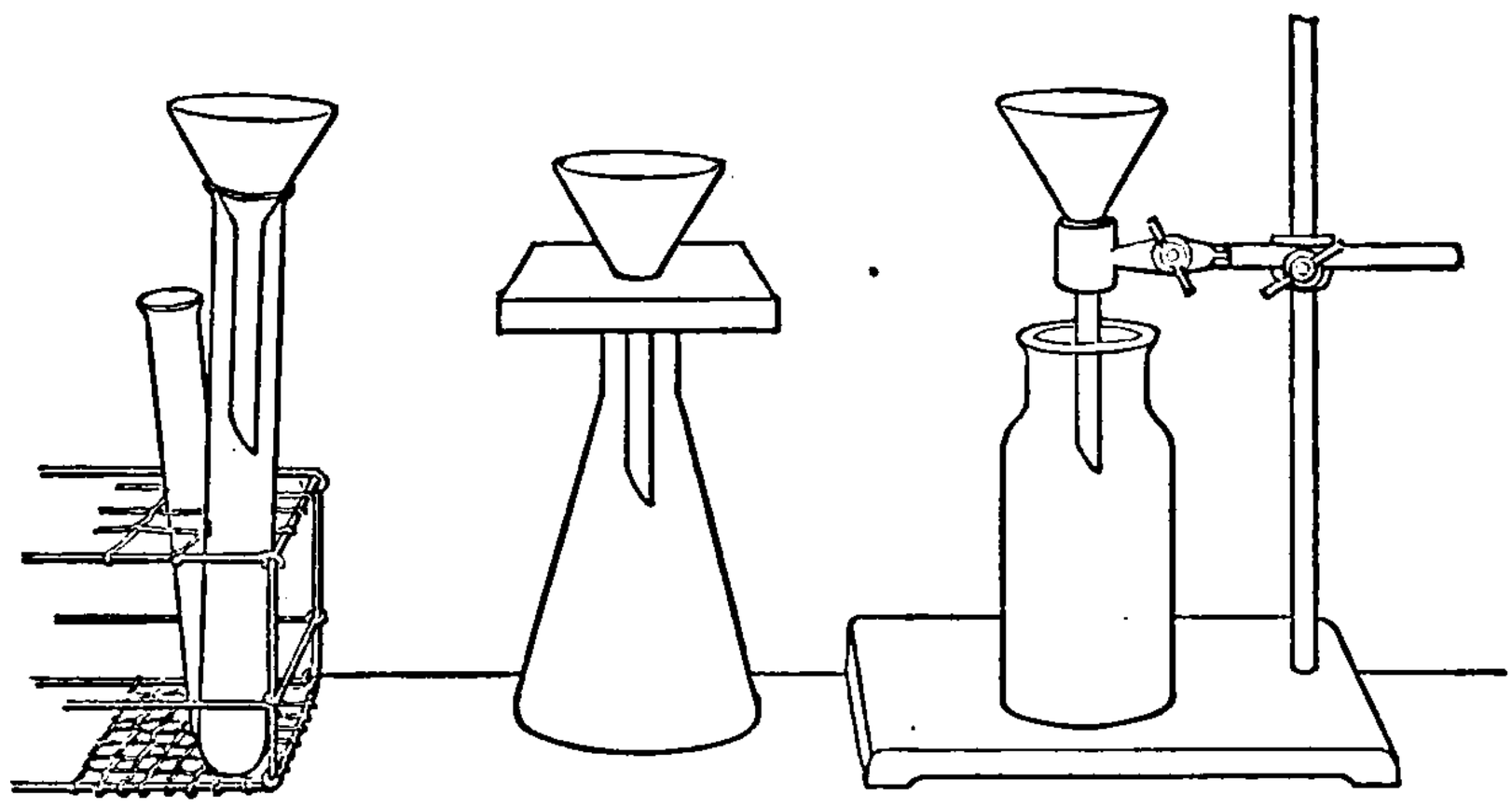

Fig. 102. — Funnel Supported for Filtering.

**5. Constructing and Arranging Apparatus.** — The various parts of an apparatus should be collected, prepared, and put together before starting the experiment in which the apparatus as a whole is used. The parts that are to fit each other should be selected and arranged so that all joints are gas-tight, and as a final precaution, especially in long experiments or those involving weighing, the apparatus should be approved by the Teacher. The following suggestions will be helpful: —

(1) *To insert a glass tube into rubber tubing.* Cut one end of the rubber tubing at an angle, moisten the smoothed end of the glass tube with water, place the end of the glass tube in the angular-shaped cavity so that both tubes are at about a right angle, grasp the rubber tube firmly and slip it slowly up and over the end of the glass tube.

(2) *To fit a glass tube to a stopper.* Moisten one end of the tube with water and grasp it firmly near this end; hold the stopper between the thumb and forefinger of the other hand, and work the tube into the hole by a gradual rotary motion. Proceed in the same manner, if the tube is to be pushed through the stopper. *Never* point the tube toward the palm of the hand that holds the stopper. *Never* grasp a bent tube

THIS PAGE IS LOCKED TO FREE MEMBERS
Purchase full membership to immediately unlock this page

Get Smart

Over 2,000 years of human knowledge in 797,885 volumes

Instant access $8.99/month

Continue

*Fair usage policy applies

a glass rod with the liquid and then pouring it down the rod. The angle at which the rod is held varies with circumstances. This is a convenient way to pour a liquid from a vessel containing a solid without disturbing the solid. (*b*) Liquids should be poured from a bottle by holding the bottle as shown in Fig. 104. Notice that the stopper and bottle are held in the same hand. The stopper is removed by holding palm of the hand upward and grasping the stopper between the the fingers before the bottle is lifted (Fig. 105). All stoppers should be removed this way when possible, and not laid down, because the impurities adhering to the stopper may run down into the bottle and contaminate the solution. The drop on the lip of the bottle should be touched with the stopper before the latter is put into the bottle; this simple operation prevents the drop from running down the outside of the bottle upon the label or upon the shelf. (*c*) Solids should never be poured directly from a large bottle into a test tube, retort, or similar vessel. A convenient method is as follows: Rotate the bottle slowly so that the solid will roll out in small quantities; catch the solid on a narrow strip of paper creased lengthwise, and slide the solid from the paper into the desired vessel.

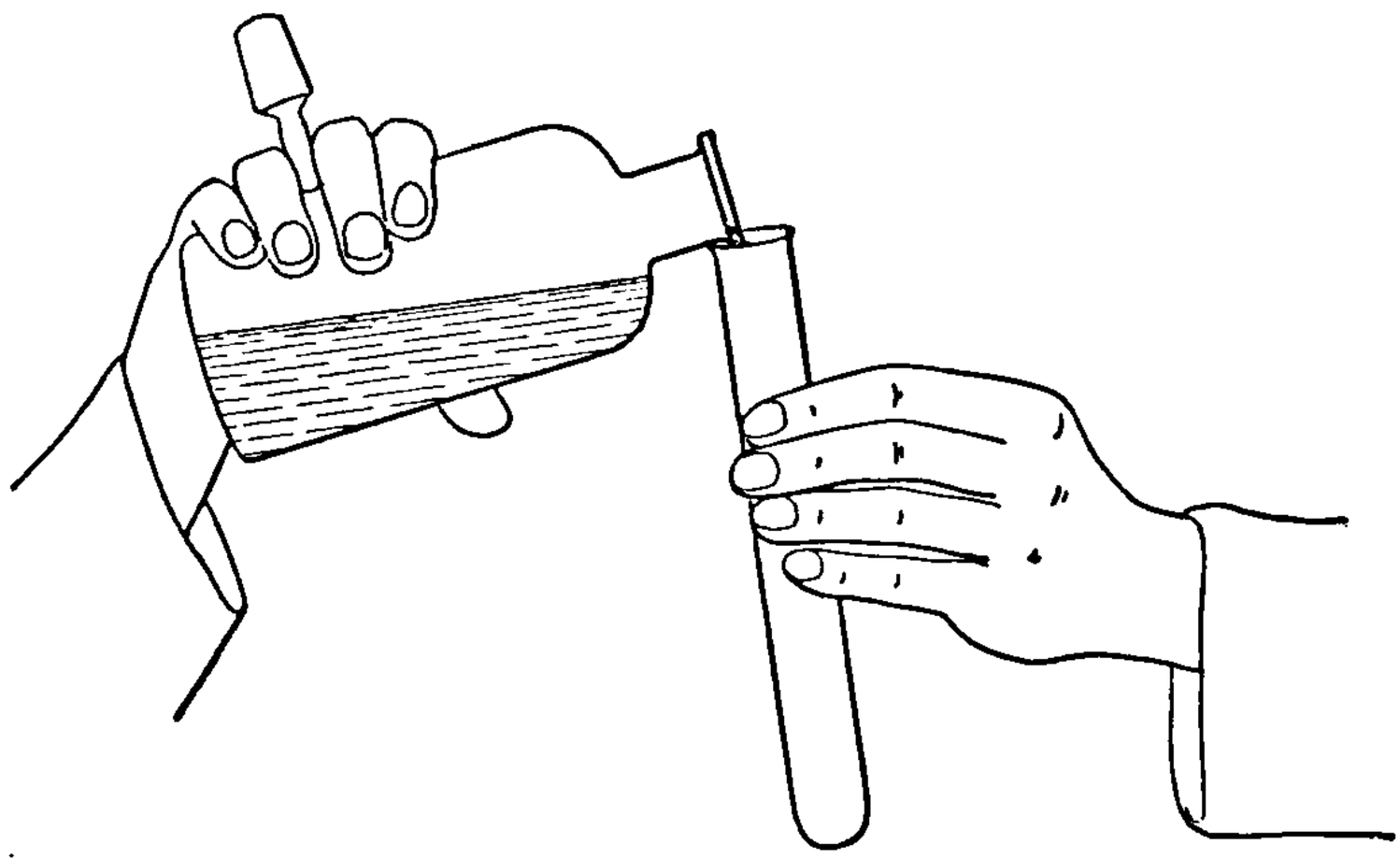

Fig. 104.—Pouring a Liquid from a Bottle.

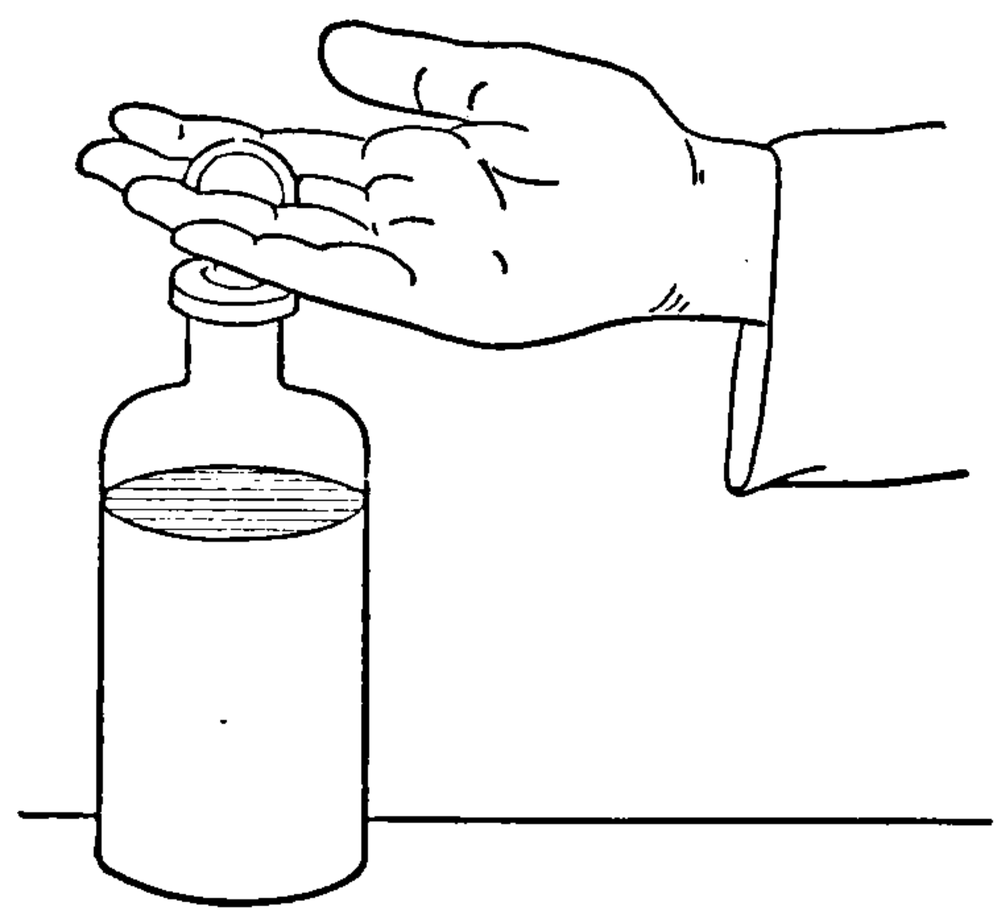

Fig. 105. — Removing the Stopper from a Bottle.

(2) *Collecting gases.* Gases are usually collected over water by means of a pneumatic trough, a common form of

which is shown in Fig. 108. The vessel to be filled with gas is first filled with water, covered with a piece of filter paper, inverted, and placed mouth downward on the support of the trough, which is previously filled with water just above the support. The paper is then removed, and the vessel slipped over the hole in the support. Glass plates instead of filter paper may be used to cover the bottle. The gas which is evolved in the generator passes through the delivery tube, and bubbles up through the water into the vessel, forcing the water out of the vessel as it rises. All gases insoluble in water may be thus collected. Some heavy gases, such as hydrochloric acid, chlorine, and sulphur dioxide, are collected by allowing the gas to flow downward into an empty bottle, and displace the air in the bottle, i.e. by downward displacement (Fig. 122). Ammonia and other light gases are usually collected by allowing the gas to flow upward into a bottle, i.e. by upward displacement (Fig. 125).

**7. Weighing.** — Most experiments in this book involve only approximate weights of substances; a few require accurate weights. Approximate weighings are made on the scales and accurate weighings on the balance.

The following rules should be observed in all weighings: —

(*a*) Before weighing, see that the scales and balance are clean and properly adjusted. If out of order, do not attempt the adjustment yourself, but report the case to the Teacher.

(*b*) Substances are put on the left side and weights on the right. Heavy objects and weights should be put in the center of the pan.

(*c*) Substances should not be placed directly on the platform or pan, except pieces of metal or glass objects. In weighing on the scales, put pieces of paper of about the same size in each platform; the left one should be creased. Take the substance from the bottle with a clean spoon or spatula, or pour it out by rotating the bottle as described in **6** (*c*); if you weigh out too much, do not put it back into the bottle, but throw it into the waste jar or a special bottle. In using

the balance, if the substance should not be placed on the pan, weigh a small watch crystal or crucible and then weigh the substance in this vessel. Sometimes a piece of apparatus is not put on the pan but hung from the balance hook.

The process of weighing is as follows: —

A. Scales. Put the object or the paper and substance on the left side; on the right side put the exact weight if it is known or the approximate weight if the exact weight is not known. Now add or remove substance or weights until the pointer swings the same number of spaces each side of the middle division. Weighings of single grams and fractions are usually made by sliding a rider along a graduated beam on the front of the scales.

B. Balance. Put the substance or object on the left pan and the weight judged to be equal on the right pan. Release the beam carefully by turning the screw or lever, and note the movement of the pointer. If the added weight is incorrect, arrest the beam and change the weights, taking care to add or remove the weights systematically. Then release the beam again and observe as before; if the pointer does not swing the same number of spaces each side of the central line, arrest the beam and change the weights accordingly. Continue until the correct weight is obtained. As soon as the substance or object is weighed, note the weights on the pan and record at once, then compare the weights with those missing from the box; if correct, so indicate in the notebook, and finally check the weight by noting the weights as they are returned to the box. The following should be rigidly observed: —

(*a*) Always arrest the beam before changing the weights or the load (i.e. the object or substance).

(*b*) If on releasing, the beam does not swing, arrest and release again, or fan one pan very gently.

(*c*) Record the result of all weighings in the proper place in a notebook, — never on a scrap of paper.

(*d*) Handle all weights with special forceps, unless otherwise directed.

THIS PAGE IS LOCKED TO FREE MEMBERS
Purchase full membership to immediately unlock this page

HISTORY

Tens of thousands of important historical sources, many previously unobtainable, are now available for the first time with a Forgotten Books Full Membership.

Unlimited Access
$8.99/month

Continue

*Fair usage policy applies

phor near the nose. (7) **Fires** may be extinguished by sand or by carbon tetrachloride. If the clothing catches fire, a damp towel or asbestos blanket should be used. (8) An **emergency box** or cabinet provided with the following articles should be kept in a convenient place: Absorbent cotton, bandages, court plaster, pins, thread, scissors, collodion, carron oil, sodium bicarbonate, vaseline, smelling salts, camphor solution, mustard, boric acid solution, medicine dropper, and a handbook of first aid to the injured. There should also be available a fire extinguisher, a box of sand (including a scoop), and a blanket.

**11. Laboratory Notebooks.** — A neat and accurate record of all experiments performed by the pupil should be made in a notebook provided for this purpose. This record and the form in which it may be kept will vary with conditions. It should contain at least the following: — (1) The number and title of each experiment and the date of performing. (2) A *brief* account of each experiment in such a form that the experiment can be repeated without error or the essential parts subsequently used. (3) Answers to all questions — not merely yes or no, but answers in which the question itself is involved. (4) A simple sketch of the apparatus. (5) All numerical data involved in weighings and calculations. (6) An index.

# EXPERIMENTS

## PROPERTIES — CHANGES

### Experiment 1 — Properties of Copper Sulphate

MATERIALS. — Copper sulphate, test tubes and rack, Bunsen burner, test tube holder, iron nail, ammonium hydroxide, barium chloride solution.

(*a*) Examine some copper sulphate and observe its properties. What is its physical state, i.e. is it a solid, a liquid, or a gas? What is its color? Drop a small piece into a test tube half full of water; is it heavier or lighter than water? Is it soluble in water? Conclusive evidence regarding its solubility may be obtained by heating the test tube. If you are unfamiliar with the method of heating usually employed in a chemical laboratory, proceed as follows: Connect the Bunsen burner with one end of the rubber tube and slip the other end tightly over the gas outlet, turn on the gas and light it; rotate the ring at the base of the burner until the flame is colorless or faint blue, and finally adjust the gas pressure until the flame is about 10 centimeters, or four inches, high. Attach the test tube holder to the test tube just below the lip (Fig. 107), put the lower part of the test tube in the flame and move the test tube slowly up and down, taking care to incline it slightly and to heat only the part that contains the liquid; if the liquid boils too vigorously, the test tube should be removed from the flame or held above it. Continue to heat gently until there is conclusive evidence of the solubility of the copper sulphate. Does copper sulphate dissolve readily in water? Stand the test

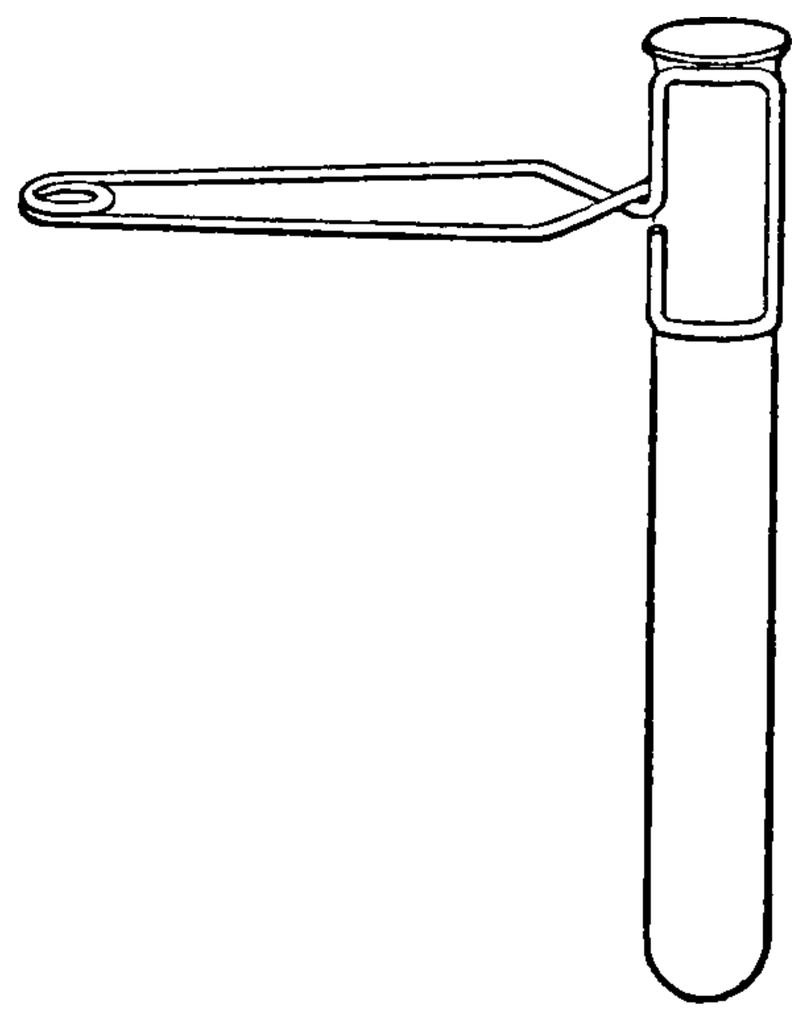

Fig. 107. — Test Tube and Holder.

tube in the test tube rack to let the liquid cool, or cool it by holding the test tube in a stream of water.

(*b*) Determine the properties of copper sulphate exhibited when different substances act upon it. If the liquid formed by heating copper sulphate and water is not uniformly colored, pour it into another test tube and then back again into the original test tube. When the liquid is thoroughly mixed, divide it into three equal parts, using test tubes as containers. Incline one test tube, carefully slip a clean iron nail into it, and let the test tube stand in the rack several minutes. Meanwhile add ammonium hydroxide solution to the second part until the test tube is about half full, and mix the liquids by shaking or by stirring with a glass rod. Add a little barium chloride solution to the third part, shake well, and let this test tube also stand undisturbed in the rack. Examine the three test tubes in succession. Pour the liquid out of the first test tube, remove and examine the nail. What does the deposit resemble? What is the deposit? If you are in doubt, compare the deposit with a piece of copper. The deep blue liquid in the second test tube contains a dissolved substance which is formed when copper sulphate and ammonium hydroxide act upon each other. Likewise in the third test tube, the white substance which settles to the bottom is formed from the sulphate portion of the copper sulphate when copper sulphate acts upon barium chloride.

(*c*) Summarize briefly the properties of copper sulphate, dividing them, as far as possible, into physical and chemical properties.

## Experiment 2 — Physical and Chemical Changes

MATERIALS. — Small piece of wood, test tubes and holder, burner, fusible metal, glass rod, sulphur, block of wood.

**A.** *Wood.* Slip a small piece of dry wood into a test tube, attach the holder, and heat cautiously; hold the test tube so that the open end is slightly the lower, and move the test

THIS PAGE IS LOCKED TO FREE MEMBERS
Purchase full membership to immediately unlock this page

Get Smart

Over 2,000 years of human knowledge in 797,885 volumes

Instant access $8.99/month

Continue

*Fair usage policy applies

## Supplementary Experiments

Not all the Supplementary Experiments need be done. Those should be selected that are needed to emphasize certain applications or principles. These Experiments may also be assigned to pupils who work quickly or who need special preparation for examinations.

### Experiment 3 — Properties of Iodine

Materials. — Iodine, alcohol, carbon disulphide.

(*a*) Examine a piece of iodine and observe its physical state, luster, color, and odor. Touch it with the finger and observe the effect upon the skin. Drop a piece into a test tube half full of water. Is it heavier or lighter than water? Stand the test tube in the rack and let it remain undisturbed until needed for (*c*).

(*b*) Drop a piece of iodine into a dry test tube, grasp the test tube near the top with the test tube holder, and gently heat the bottom of the test tube in the upper part of the flame until a definite change occurs in the iodine. What is the effect of heat upon iodine?

(*c*) The solubility of iodine may now be determined. Shake the test tube containing the water and iodine, let any undissolved iodine settle and then pour the liquid into another test tube. Examine this liquid. Is there evidence of dissolved iodine? If the evidence is inconclusive, add a few drops of carbon disulphide and shake well. Carbon disulphide is much heavier than water and sinks to the bottom; at the same time it absorbs any dissolved iodine and becomes violet in color. What final conclusion can be drawn regarding the solubility of iodine in water? Measure 15 cubic centimeters of alcohol in the graduated cylinder, and pour it into the other test tube that contains the piece of undissolved iodine. Shake well, and warm slightly by holding the test tube above a low flame for a minute or two; *take care not to set the alcohol on fire.* Shake well. What is the evidence of the solubility of iodine? Confirm the conclusion by pouring a little of this liquid into a test tube half full of water, adding a few drops of carbon disulphide, and shaking well. What final conclusion can now be drawn regarding the solubility of iodine in alcohol?

(*d*) Summarize briefly the properties of iodine.

## Experiment 4 — Physical and Chemical Changes

MATERIALS. — Copper wire, electric bell apparatus.

(*a*) Examine a piece of clean copper wire and notice especially its color and flexibility. Grasp one end of the wire with the forceps, and hold the other end in the hottest part of the flame until the copper melts and undergoes a definite change. Then remove it from the flame and examine the black product. Compare its properties with those of copper. Is it apparently a different substance from the copper? Why? What kind of a change did the melted copper undergo?

(*b*) Introduce a piece of copper wire into the circuit of an electric bell apparatus. Does copper conduct electricity? Remove the wire and examine it. What kind of a change did it undergo?

(*c*) Roll a piece of copper wire into a ball, drop it into a test tube half full of dilute nitric acid, and warm gently. What is the evidence that the copper is undergoing a change? Verify the observation by utilizing a preceding experiment. What kind of a change did the copper undergo when treated with nitric acid?

## Experiment 5 — Physical and Chemical Changes

MATERIALS. — Magnesium, forceps.

Examine a piece of magnesium and note its properties, especially the luster, color, and flexibility. Grasp one end firmly with the forceps and hold the other end in the flame for an instant and then remove it. Observe the result. Examine the whitish substance that is formed and compare its properties with those of magnesium. Has the essential change in the magnesium been physical or chemical? Why?

## Experiment 6 — Preparation and Properties of Oxygen

MATERIALS. — 15 grams of potassium chlorate, 15 grams of manganese dioxide, 5 bottles (about 250 cubic centimeters each), filter paper, joss stick or splint of wood, sulphur, deflagrating spoon, piece of charcoal fastened to one end of a copper wire (30 centimeters long) and a wad of iron thread (often called "steel wool") to the other end. The apparatus is shown in Fig. 108. *A* is a large test tube provided with a one-hole rubber stopper, to which is fitted a short glass tube *B;* the delivery tube *D* is attached to the short glass tube by the rubber tube *C*.

I. *Preparation.* Weigh the potassium chlorate on a piece of paper creased lengthwise, and slip it into the test tube; do the same with the manganese dioxide. Shake the test tube until the chemicals are thoroughly mixed; then hold the test tube in a horizontal position and roll or shake it until the mixture is spread along about one half of the tube. Insert the stopper with its tubes, and clamp the test tube to the iron stand, as shown in Fig. 108, taking care not to crush the tube.

Fill the pneumatic trough with water, until the support is just covered. Fill the bottles *full* of water, cover each with a piece of filter paper, invert one of them in the trough, remove the filter paper, and stand the inverted bottle upon, or near, the support. The end of the delivery tube *D* should rest on the bottom of the trough, just under the hole in the support.

Before proceeding, ask the Teacher to inspect the apparatus. Heat the whole test tube gently with a flame about 10 centimeters (or 4 inches) high. When the gas bubbles regularly through the water slip the inverted bottle over the hole in the support. The gas will rise in the bottle and force out the water. Move the flame slowly along the test tube, taking care not to heat the tube too long in one place nor too near the rubber stopper. If the gas is evolved too rapidly, lessen the

THIS PAGE IS LOCKED TO FREE MEMBERS
Purchase full membership to immediately unlock this page

HISTORY

Tens of thousands of important historical sources, many previously unobtainable, are now available for the first time with a Forgotten Books Full Membership.

Unlimited Access
$8.99/month

Continue

*Fair usage policy applies

(*c*) Hold the charcoal in the flame long enough to produce a faint glow, then lower it into a bottle of oxygen. Observe the result.

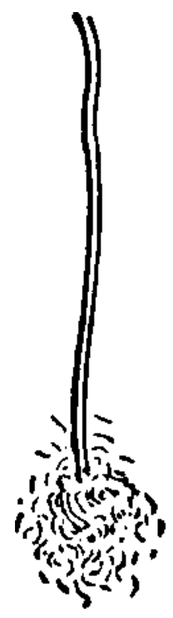

Fig. 109.—Iron Thread Attached to End of Copper Wire.

(*d*) Twist one end of the copper wire (used in (*c*)) firmly around the wad of iron thread (Fig. 109), heat the ends of a few strands of the thread an instant in the flame, and quickly lower it into a bottle of oxygen. The iron thread should change conspicuously. If it does not, heat it a second time in the flame, and lower it again into the bottle of oxygen. Observe the result.

(*e*) With the remaining bottle, repeat any of the above experiments.

NOTE.—Clean the test tube used in **6** I with a little warm water.

**Required Exercises.**—1. Write a brief account of Exp. **6** I in your note book.

2. Write a brief account of Exp. **6** II, answering all questions.
3. Sketch the apparatus used to prepare oxygen.

## Experiment 7—Oxidation of Copper

MATERIALS.—Copper borings, evaporating dish, gauze-covered ring, iron stand, test tube and cork.

Put about 4 gm. of copper borings in an evaporating dish and stand the dish on a gauze-covered ring, which is attached to an iron stand (Fig. 110). Heat the dish carefully but strongly about ten minutes; then direct the free flame of the burner upon the contents of the dish for about five minutes, stirring occasionally with a glass rod. Describe any marked change in the copper. When the dish is cool, pour the contents into a test tube, cork the test tube tightly, and save for use in Exp. **11**.

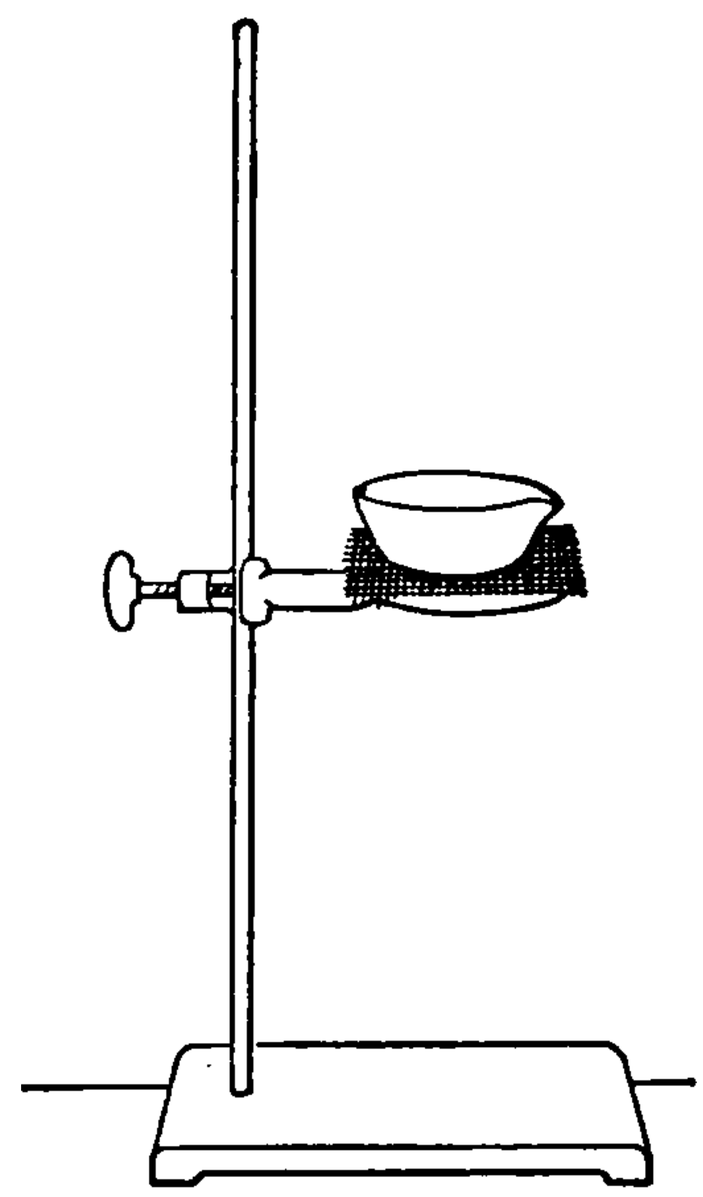

Fig. 110.—Evaporating Dish on a Gauze-covered Ring.

Describe the experiment briefly. What chemical compound was formed? What elements combined?

What general name is given to this kind of chemical change? What special name?

NOTE. — The dish can be cleaned by warming dilute nitric acid in it.

## SUPPLEMENTARY EXPERIMENTS

(See note on page 14.)

### Experiment 8 — Preparation of Oxygen from Various Substances

*(Each pupil need not perform all of this experiment.)*

MATERIALS. — Mercuric oxide, lead dioxide, barium dioxide, sodium peroxide, hydrogen peroxide, potassium permanganate, joss stick.

**A.** *Mercuric Oxide.* Put a little mercuric oxide on the end of a narrow piece of paper creased lengthwise, and slip the powder into a test tube. The powder should nearly fill the round end of the test tube. Hold the test tube in a horizontal position, shake it to spread the powder into a thin layer, and then clamp the test tube in the position shown in Fig. 111. Heat the test tube strongly with the upper part of the Bunsen flame. Do not heat one place, but move the burner back and forth. As soon as a definite change is noticed inside the tube, insert a glowing joss stick. Observe and describe the change. If there is no change, heat strongly, and test again. What gas is liberated? Examine the deposit inside the tube. What is it? If you are in doubt, scrape out a little, and examine again. State the result of the final observation.

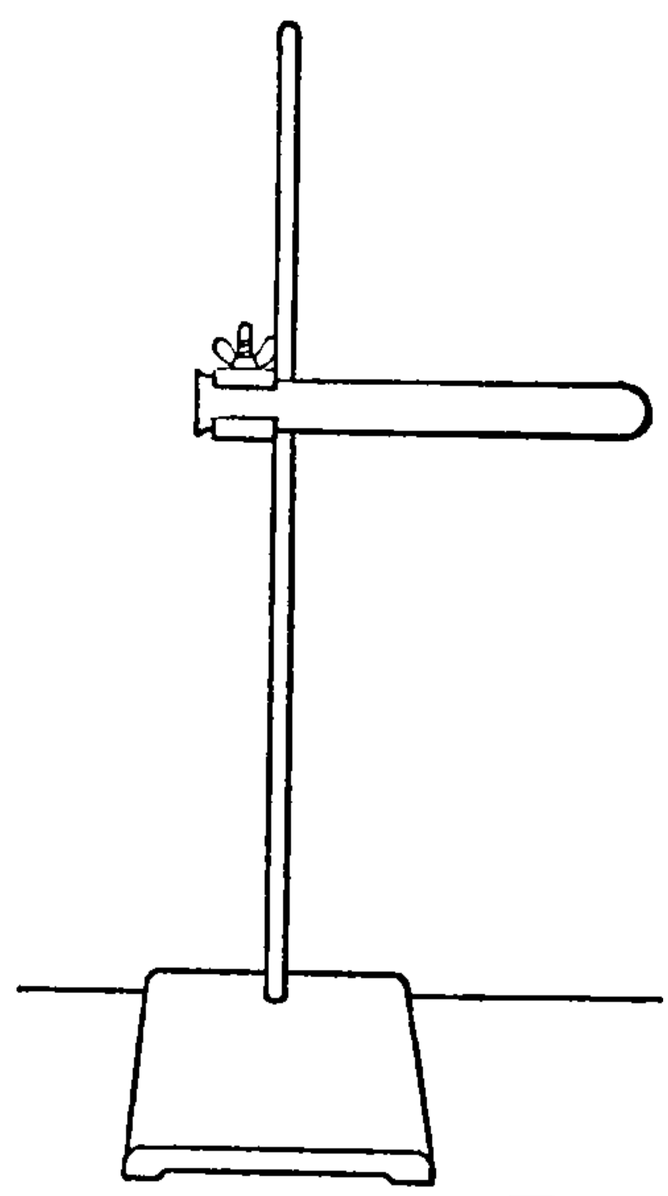

Fig. 111.—Test Tube Clamped in Position for Heating Certain Substances.

**B.** *Lead Dioxide.* Put a little lead dioxide into another test tube and proceed with the heating as in **A.** Test with the joss stick. Observe and state the result.

**C.** *Barium Dioxide.* Proceed as in **B** using barium dioxide.

**D.** *Sodium Peroxide and Water.* Fill a test tube two-thirds full of water and stand it in the test tube rack. Obtain from the Teacher a little sodium peroxide on a creased paper, cautiously slip the sodium peroxide into the water, and then thrust a glowing joss stick into the upper part of the test tube. Observe and state the result.

**E.** *Hydrogen Peroxide and Potassium Permanganate.* Fill a test tube one-third full of hydrogen peroxide, add half the volume of dilute sulphuric acid, and then several drops of potassium permanganate solution. Test as in **D.** State the result.

## Experiment 9 — Effect of Heating a Known Weight of a Metal in Air

MATERIALS. — Porcelain crucible and cover, zinc dust, triangle, scales.

Clean and dry a porcelain crucible and cover, and weigh both on the scales (or on the balance, if desired). Record the weight as shown below. Crease a slip of paper lengthwise, pour zinc dust into the crease and slide the zinc dust into the crucible until about 3 gm. have been added, and then weigh accurately (including the cover). Record as below. Place the covered crucible on the triangle, which may be supported by a ring attached to an iron stand. Heat gently with a low flame to avoid breaking the crucible. Gradually increase the heat until the flame is just above the bottom of the crucible. Heat for about twenty minutes. Lift the cover occasionally by grasping the ring with the forceps. If the zinc glows and a smoke escapes, cover the crucible at once to prevent loss; it is necessary to admit air and to heat the zinc very hot, but little or nothing should be allowed to escape from the crucible. Cool the crucible gradually by moving the flame slowly beneath it. As soon as the crucible is cool, weigh, and record as below. To what is the change in weight due?

RECORD

Weight of crucible, cover, and zinc.....
" " " and cover .....
" " zinc.....
" " crucible and contents before heating .
" " " " " after " ..
Change in weight .....

NOTE. — The crucible can be cleaned with dilute hydrochloric acid.

THIS PAGE IS LOCKED TO FREE MEMBERS
Purchase full membership to immediately unlock this page

Get Smart

Over 2,000 years of human knowledge in 797,885 volumes

Instant access $8.99/month

Continue

*Fair usage policy applies

into the bottle by pinching the clamp; if the acid does not flow freely down the tube into the bottle, loosen the stopper for an instant, and as soon as the acid enters the bottle push the stopper into place. The interaction of the zinc and sulphuric acid produces hydrogen, and the gas will bubble through the water in the trough up into the bottle. Collect and remove the bottles of gas as in the Preparation of Oxygen, taking care to cover each bottle tightly with a piece of wet filter paper. If the evolution of gas slackens or ceases, add a little more acid through the dropping tube. Collect four bottles of hydrogen, and perform II at once.

II. *Properties.* Proceed as follows with the hydrogen gas prepared in I. (*a*) Uncover a bottle for an instant to let a little air in, and then drop a lighted match into the bottle. Observe the result.

(*b*) Remove the paper from another bottle of hydrogen, and allow it to remain uncovered for three minutes — by the clock. Then show the presence or absence of hydrogen by dropping a lighted match into the bottle. Observe the result. What property of hydrogen is shown by this experiment?

(*c*) Verify your answer to the last question, thus: Hold a bottle of air over a covered bottle of hydrogen, remove the paper, and bring the mouths of the bottles together, as shown in Fig. 113. Hold them there for a minute or two, then stand the bottles on the desk and cover them with wet filter paper. Drop a lighted match into each bottle. Observe the result. How does (*c*) verify (*b*)?

Fig. 113 — Transferring Hydrogen.

(*d*) Invert a covered bottle of hydrogen, remove the paper, and quickly thrust a lighted taper up into the bottle. Withdraw the taper, then insert and withdraw it several times, and observe carefully (1) whether the hydrogen burns, and, if so, where? and (2) if the taper burns inside

and outside the bottle. Feel of the neck of the bottle; describe and explain.

NOTE. — As soon as this experiment is completed, pour off the acid from any unused zinc. If Exp. **11** is not to be performed soon, wash the zinc several times, and save it for other experiments.

**Required Exercises.** — 1. Write a brief account of Exp. **10** I.

2. Write a brief account of Exp. **10** II, answering all questions.

3. The apparatus used to prepare hydrogen is called a generator; sketch it (from memory, if possible).

## Experiment 11 — Reduction of Copper Oxide by Hydrogen

MATERIALS. — Copper oxide, apparatus shown in Fig. 114.

Put the copper oxide that was prepared in Exp. **7** in an evaporating dish, stand the dish on a gauze-covered ring attached to an iron stand (Fig. 110), and heat gently. Mean-

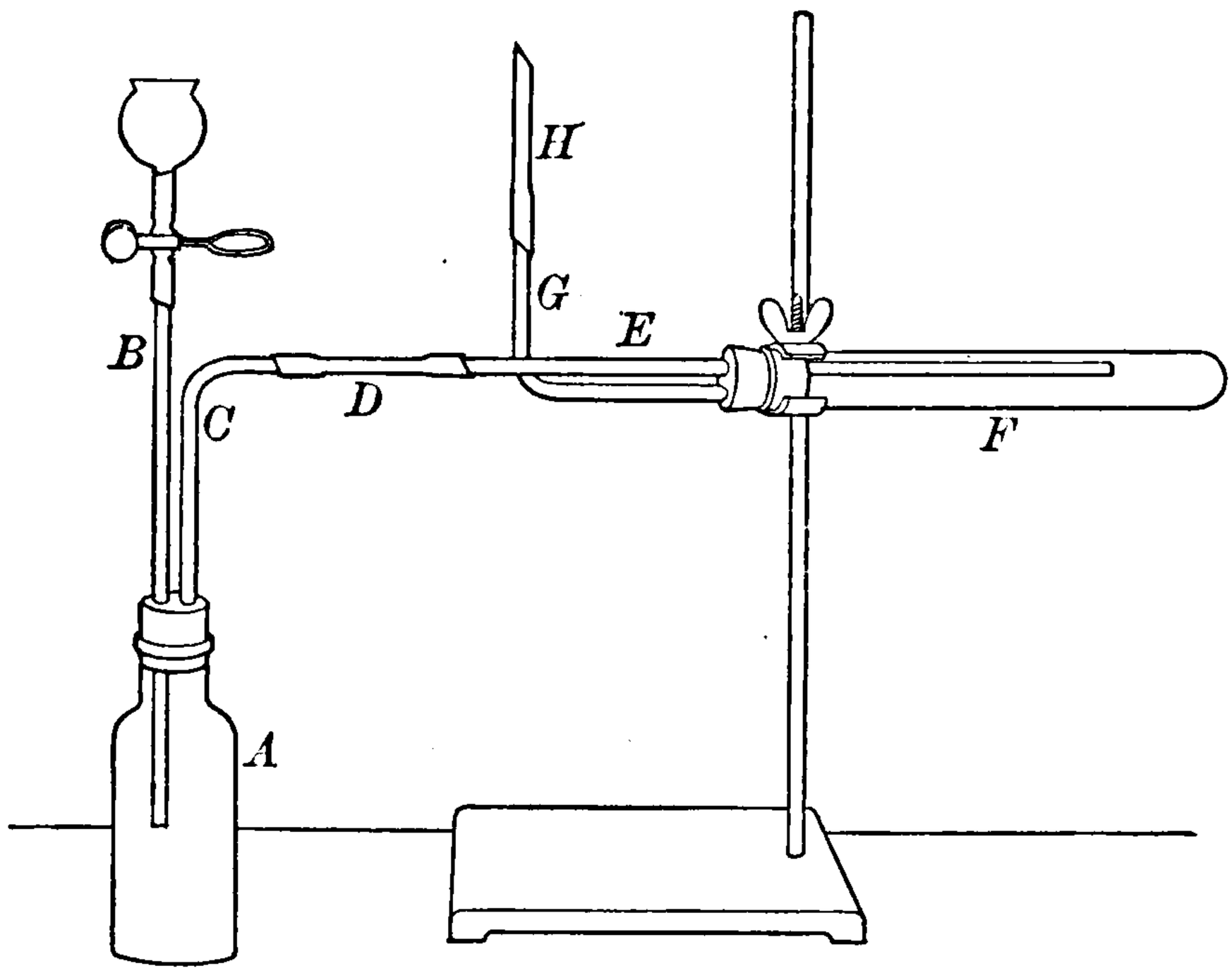


Fig. 114. — Apparatus for the Reduction of Copper Oxide by Hydrogen.

while, arrange the apparatus. The parts lettered *A*, *B*, *C*, *D*, *E*, constitute the hydrogen generator and are the same as those used in Exp. **10** I. *F* is a large test tube fitted with a two-hole stopper; the delivery tube *E* passes through one

hole and extends nearly to the bottom, and the right-angle tube *G* passes just through the other hole; the tube *G* is lengthened by the rubber tube *H*.

Slip the copper oxide into the test tube *F*, hold the test tube in a horizontal position and tap it gently to spread the solid into a long, thin layer. Connect the test tube with the rest of the apparatus, and clamp it into the proper position, taking care not to crush the tube.

Ask the Teacher to inspect the apparatus, and do not proceed until permission is given. After obtaining permission, fill the cup of the generator nearly full with dilute sulphuric acid, pinch the clamp, and let about half the acid run into the generator bottle. Allow the gas to flow steadily for at least two minutes before lighting the Bunsen burner; then introduce a little more acid. Now, heat gently the lower part of the test tube where the copper compound is located. *Do not let the flame come near the rubber tube H.* The gas must flow slowly through the apparatus during the heating; if it does not (as you can tell by the bubbles in the bottle or by smelling the gas at the end of the rubber exit tube), introduce a little more acid. If the test tube *F* should break, pinch the rubber tube *D* an instant to cut off the flow of hydrogen, and then extinguish the Bunsen burner flame. When a marked and permanent change is observed inside the test tube *F*, stop heating, and extinguish the Bunsen burner flame *at once.* Observe the entire contents of the test tube; what, in all probability, are both products?

**Required Exercises.** — 1. Describe briefly the whole experiment, and sketch the apparatus.

2. What chemical compound was formed in *F*?

3. How was the copper compound changed? What special name is given to this kind of a change?

4. Recall Exp. **7**; in Exps. **7** and **11**, what was oxidized, what was reduced, and what substances accomplished the oxidation and the reduction? Summarize in a few words how Exps. **7** and **11** illustrate oxidation and reduction.

THIS PAGE IS LOCKED TO FREE MEMBERS
Purchase full membership to immediately unlock this page

HISTORY

Tens of thousands of important historical sources, many previously unobtainable, are now available for the first time with a Forgotten Books Full Membership.

Unlimited Access
$8.99/month

Continue

*Fair usage policy applies

full of water, cover and invert it, and clamp it as shown in Fig. 115. Wrap a small piece of clean sodium loosely in a piece of tea lead about 5 centimeters (2 inches) square, make two or three small holes in the tea lead, and then thrust it under the test tube. A gas will rise into the test tube. Proceed similarly with additional pieces of sodium and *dry* tea lead until the test tube is full of gas; then unclamp it, remove, and invert. Hold a lighted match, for an instant, at the mouth of the tube. Observe the result, especially at the mouth of the tube. What is the gas? What was it source?

**E.** *Calcium and Water.* Arrange the apparatus as in **D.** Drop two or three pieces of calcium into the water in the dish, and push them under the test tube. As soon as the tube is full, or nearly full, remove the tube, and test the gas as in **D.** State the result. Answer the questions asked in **D.**

# PROPERTIES OF GASES

## Supplementary Experiment

### Experiment 13 — Weight of a Liter of Oxygen

(If desired, this Experiment may be postponed until the pupil has acquired more experience in the laboratory. It is suggested that it be performed while Chapter VII or VIII is being studied.)

Materials. — Potassium chlorate, manganese dioxide, calcium chloride, glass wool or shredded asbestos, and the apparatus shown in Fig. 116. *A* is a large test tube attached to the bent tube *F* by a rubber stopper. *B* is a large bottle to be filled with water; it is provided with a two-hole rubber stopper, through which pass *F* and *C*, the latter being connected with a rubber tube *C′* to which is attached the short glass tube *G*. A Hofmann screw is attached at the point *E*. Another large bottle *D* serves to catch the water forced over from *B* through *CC′* by the oxygen generated in *A*. A hook (*S*) of aluminium wire permits *A* to be hung from the balance beam in weighing.

Fill the space 1 in *A* with a mixture of manganese dioxide and potassium chlorate (about equal parts). Each substance must be powdered and free from organic matter (e.g. paper, cork, straw). The mixture should be dried by heating it in an oven to about 110° C., on a radiator, or on some convenient heated object. Push glass wool, or shredded asbestos (previously ignited to a red heat), into the space 2 in *A*. Put small lumps of calcium chloride into 3 and glass wool into 4. Push the stopper well into the test tube. Wipe *A* carefully with soft paper, and then weigh *AF* on the balance. Weigh the empty, dry, clean bottle *D* to a decigram on the scales.

Fill *B* with water nearly to the neck. Fill *CC′* with water and tighten the Hofmann screw to prevent the water from running out. Insert *F* into the stopper of *B*. Push the stopper into the bottle, slowly at first, then hard; if water rises in *F*, loosen the screw at *E* slightly, remove *A*, and blow gently into *F* to force the water back into *B*. When properly adjusted, the water should be in *B* and *CC′*, but not in *F*. Replace *A*, taking care not to crush the thin glass by

pushing it too hard upon its stopper; open the screw at *E*. If the apparatus is tight, little or no water will flow out. It should be adjusted until air tight. Leave the screw open.

Heat *A* gently with a low flame, keeping the flame back of the space 2. The liberated oxygen will force the water from *B* into *D*. Heat *A* just hot enough to cause a gentle flow of water into *D*. When *D* is about three-fourths full, decrease the heat gradually. While *A* is cooling sufficiently to weigh, stand a thermometer in *D;* also read the barometer. When *A* is cold, raise *B* until the water is at the same level in *B* and *D*, pinch *C'* tight and remove it from *D*. Read and remove the thermometer. Dry *D* on the outside, if necessary, and then weigh it, using the same large weights as before; the gain in weight (in grams) of *D* gives the volume (since 1 gm. of water = 1 cc.) of oxygen liberated. Weigh *AF;* its loss in weight is the weight of the oxygen that passed into *B*.

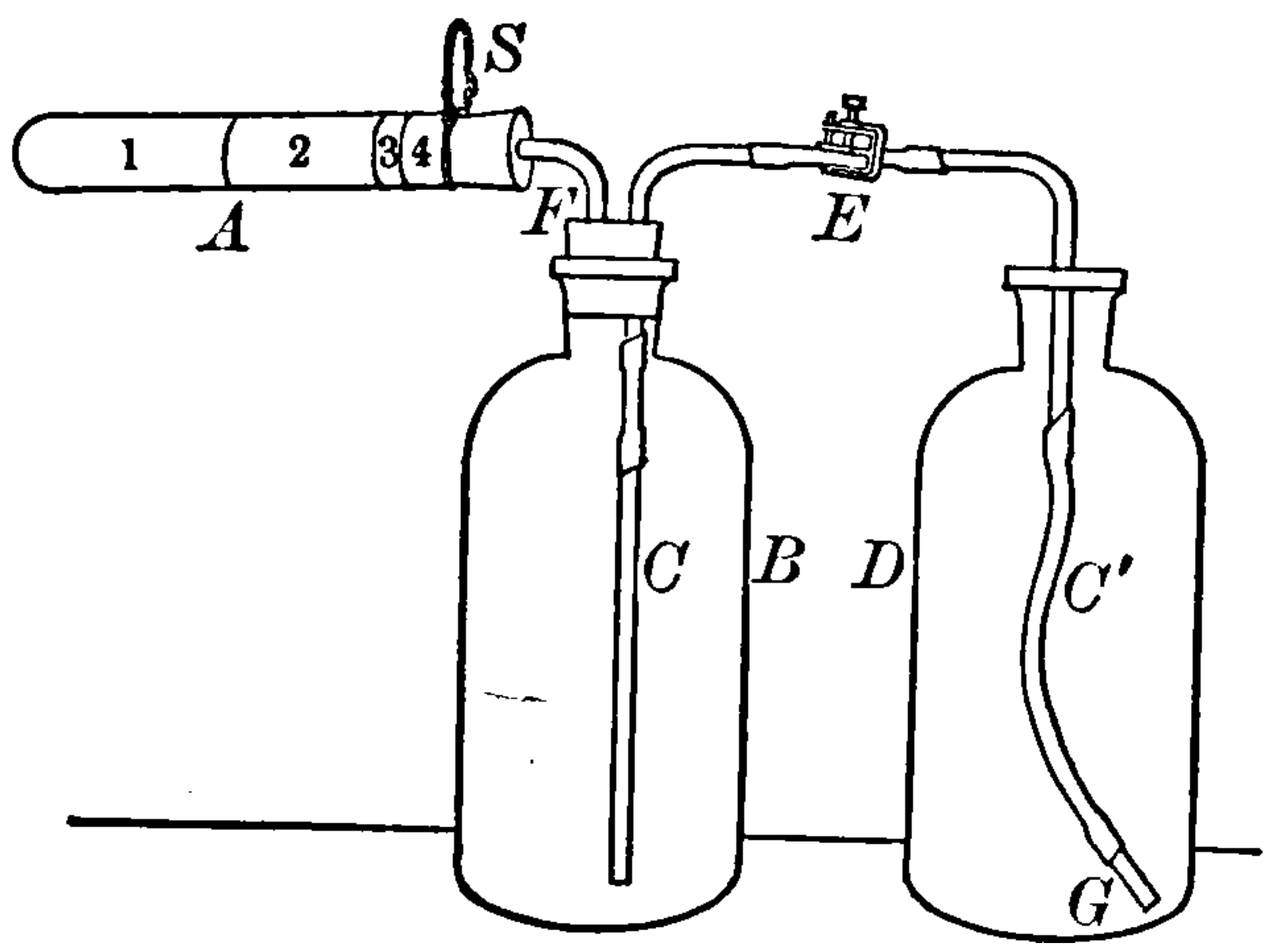

Fig. 116.—Apparatus for Finding the Weight of a Liter of Oxygen.

Reduce the observed volume to the volume it would occupy, if it were at 0 C., 760 mm., and in the dry state. This is done by the formula —

$$V = \frac{V' (P' - a)}{760(1 + (.00366 \times t))}$$

Substitute the proper values in this formula, and solve for V — the corrected volume of oxygen liberated. (See Part I, **33, 34, 40.**)

Since 1 liter contains 1000 cubic centimeters, then V/1000 is the actual volume of liberated oxygen expressed in liters. The weight of liberated oxygen is found by subtracting the weight of *AF* after heating from its weight before heating. And finally the weight of 1 liter of oxygen in grams is found by dividing the weight of liberated oxygen by its volume.

THIS PAGE IS LOCKED TO FREE MEMBERS
Purchase full membership to immediately unlock this page

Get Smart

Over 2,000 years of human knowledge in 797,885 volumes

Instant access $8.99/month

Continue

*Fair usage policy applies

lower the thermometer until the bulb touches the boiling water, note the highest temperature, and then remove the thermometer. Compare the two maximum readings. Average them and record the result.

**D.** *Freezing Point.* (*a*) Put several small pieces of ice into a 250 cc. bottle, add a little water, and about 10 gm. of coarse salt. Fill a small test tube half full of water, insert a thermometer until the bulb is immersed, and lower the test tube into the mixture of ice and salt. Stir the water with the thermometer, and note the temperature at which ice begins to form in the test tube; remove the test tube, melt the ice, and try again. Make several trials and note each result; take an average of the temperatures observed and record the result.

(*b*) Fill a 250 cc. bottle half full of water, drop in several pieces of ice, and shake for two or three minutes. Insert the thermometer until the bulb is immersed and note the lowest temperature; repeat, and take an average, as in (*a*).

## Experiment 16 — Some Chemical Properties of Water

(*If desired,* **A** *may be performed later as Exp.* **29 B.**)

MATERIALS. — Sodium, potassium, calcium, test wire, zinc sulphate solution, sulphur, calcium oxide.

**A.** *Interaction with Metals.* (*a*) Sodium and potassium. (See *Precaution* in Exp. **12 D.**) Fill an evaporating dish half full of water. Obtain three or four small pieces of sodium from the Teacher; place a mortar over the sodium until needed. Drop a piece of sodium upon the water in the dish, stand back and observe the result, waiting for the slight explosion before approaching the dish again; repeat with the rest of the sodium, piece by piece. When the chemical action is over, stand the dish on a gauze-covered ring attached to an iron stand (see Fig. 110), and heat until the water is entirely evaporated.

Meanwhile, proceed with the potassium. Fill a pneumatic trough half full of water. Obtain a small piece of potassium from the Teacher, and drop the potassium upon the water.

Stand back and observe the result, waiting for a slight explosion as in the case of sodium.

As soon as the water has been evaporated from the dish, examine the residue as follows: (1) Moisten the end of a glass rod, touch the residue with it, and then draw this end across a piece of moistened red litmus paper. Observe the change in color of the litmus paper; this change in color of red litmus paper is always caused by the strong hydroxides — sodium hydroxide in this case. (2) Moisten the looped end of a clean test wire (Fig. 103), touch it to the residue, and hold the end of the wire in the lower and outer part of the Bunsen flame. Observe the color of the flame; it is caused by the sodium in the residue. The production of this color is one of the tests for sodium. (3) Dissolve the residue in 5 cc. of water, pour a little of the solution into a test tube, add a few drops of zinc sulphate solution, and shake. Observe the result. Now pour the rest of the solution into the test tube and shake well. Observe the result. This is a test for the hydroxide part of sodium hydroxide.

**Required Exercises.** — 1. What property of water is shown by Exp. **16 A** (*a*)?

2. State the chemical change involved in the interaction of sodium and water.

3. The interaction of potassium and water is analogous to that of sodium and water; express the essential chemical change in the form of an equation (using the names of the substances).

(*b*) Calcium. Fill a small test tube nearly full of water, — warm slightly and stand the test tube in the rack. Drop a small piece of clean calcium into the test tube, and observe the result. If the action is not marked, add another piece of calcium or warm the water. In a minute or two, test the gas evolved. What is it? Examine the contents of the test tube for evidence of another product. If the evidence is doubtful, let the action continue and examine the test tube subsequently, especially the lower part.

Recalling the chemical change in (*a*), what chemical change has in all probability taken place in (*b*)?

**B.** *Combination with Oxides.* (*a*) Put a little water in a bottle. Set fire to a small piece of sulphur in a deflagrating spoon and lower the burning sulphur into the bottle. Let it burn a minute or two, then extinguish it by dipping the spoon into the water. Remove the spoon, cover the bottle with the hand, and shake well. Dip a glass rod into the liquid, touch the moistened end to a piece of blue litmus paper, and observe the change in color. This change in the color of blue litmus is caused by acids; in this case the acid is sulphurous acid, which was produced by the combination of the sulphur oxide and water.

(*b*) Boil a small piece of calcium oxide with a little water in a test tube. Test with red litmus paper. If the result is indifferent, put the paper in the test tube and shake well. Observe the result. Recall, or review, the explanation in **A** (*a*) (1).

**Required Exercises.** — 1. State briefly the essential chemical change that took place in Exp. **16 B** (*a*). Also in (*b*).

2. State these chemical changes in the form of equations (using the names of the substances).

## Experiment 17 — Solubility of Gases

MATERIALS. — As below.

(*a*) Fill a test tube half full of water, close with the thumb and shake the test tube vigorously up and down several minutes. Warm the test tube very gently. What is the immediate evidence of dissolved gas? What effect has increased heat on the dissolved gas?

(*b*) Heat the following in separate test tubes as in (*a*): Faucet water, ammonia solution, hydrochloric acid solution. Do the results resemble those in (*a*)? As soon as the observation is made, pour the liquids down the sink and flush it well with water.

## Experiment 18 — Solubility of Liquids

MATERIALS. — Alcohol, kerosene, glycerin, aniline, ether, carbon disulphide.

(*a*) To a test tube half full of water add a little alcohol and shake. Is there evidence of solution? Add a little more and

THIS PAGE IS LOCKED TO FREE MEMBERS
Purchase full membership to immediately unlock this page

HISTORY

Tens of thousands of important historical sources, many previously unobtainable, are now available for the first time with a Forgotten Books Full Membership.

Unlimited Access
$8.99/month

Continue

*Fair usage policy applies

(*b*) Heat I, and add gradually 4 more gm. of powdered copper sulphate. Does it all dissolve? Heat II and add 4 more gm. of powdered potassium chlorate. Does it all, or most all, dissolve? What general effect has increased heat on the solubility of solids? Save the solutions for (*c*).

(*c*) Heat I and II nearly to boiling, and as the temperature increases add the respective solids. (Do not boil the solution; keep it near the boiling point by frequent heating.) Is there a limit to their solubility? Draw a general conclusion from these typical results.

**B.** *Special.* (*a*) Fill a test tube half full of clear calcium hydroxide solution, and heat it to boiling. Observe the result. Compare with the cold solution. What effect has heat upon the solubility of calcium hydroxide?

(*b*) Prepare a saturated solution of sodium chloride by heating about 5 gm. in 10 cc. of water; shake frequently, and finally bring the solution to the boiling point, but do not evaporate much of the water. Let the test tube stand a minute, and then pour the solution into another test tube. Observe its general appearance. When cool, examine and compare with the clear, hot solution. Answer as in (*a*).

## Experiment 20 — Crystallization

MATERIALS. — Copper sulphate, alum, potassium dichromate, potassium ferrocyanide, sodium chloride, borax.

Prepare a hot, concentrated solution of one or more of the following substances, using about 25 cc. of water and the number of grams indicated: Copper sulphate (25), alum (25), potassium dichromate (15), potassium ferrocyanide (25), sodium chloride (10), borax (5). Pulverize the solid, if it is not provided as a powder. Prepare the solution by boiling the mixture of water and the solid in a large test tube several minutes. Let any undissolved solid settle, and then pour most of the clear solution down a moistened glass rod (see Int. **6** (1) ) into an evaporating dish, or another small shallow vessel, taking care not to let any undissolved solid get into

the dish. Suspend a piece of thread across the dish and push it down into the solution. Stand the whole aside to crystallize. Examine at intervals, and when well-shaped crystals have formed, especially on the thread, remove them. Dry the crystals carefully with filter paper. Examine them, using a lens if the crystals are small, and observe the properties, particularly the shape, luster, and color. (Save the crystals for later experiments.)

### Experiment 21 — Testing for Water of Crystallization in Various Substances

MATERIALS. — See below.

Test several of the crystallized substances enumerated below for water of crystallization by heating a dry specimen of each in a test tube inclined so that the open end is the lower: Sodium carbonate, potassium dichromate, ferrous sulphate, borax, barium chloride, alum, zinc sulphate, sodium sulphate, calcium sulphate, sodium chloride, potassium nitrate, sugar, magnesium sulphate, potassium bromide, and any of the crystallized substances prepared in Exp. **20**.

Observe in each case (1) the change in appearance of the solid during the heating, (2) relative amount of water liberated (if appreciable), (3) appearance of the residue.

### Experiment 22 — Per Cent of Water of Crystallization in Crystallized Copper Sulphate

MATERIALS. — Crystallized copper sulphate, evaporating dish.

Clean and dry an evaporating dish and weigh it to a decigram. Record the weight at once in the notebook. (See below.) Powder some copper sulphate and put it into the dish until about 10 gm. have been added; then weigh to a decigram. Record the weight at once (see below). Stand the dish with its contents on a gauze-covered ring attached to an iron stand (see Fig. 110) and heat gently for five or ten minutes, and then strongly until the blue color disappears and

the substance turns to a powder. Do not touch the substance, and take special pains not to lose any. Cool slowly and weigh as before. Record the weight at once, and calculate the per cent of water of crystallization. Submit the result to the teacher for criticism.

RECORD

| | | | |
|---|---|---|---|
| Weight of dish and substance before heating | = | | gm. |
| Weight " " " " | = | | gm. |
| Weight " " " " | = | | gm. |
| Weight " " " " after " | = | | gm. |
| Weight " water of crystallization | = | | gm. |
| Per cent of water of " | = | | per cent |

## Experiment 23 — Efflorescence

MATERIALS. — As below.

Put a fresh, or a recently broken, crystal of several of the following substances on a piece of filter paper, and leave them exposed to the air for an hour or more: Sodium carbonate, sodium sulphate, borax, ferrous sulphate, alum, potassium ferrocyanide, barium chloride, potassium chromate, magnesium sulphate. Describe any marked change. What does the change, if any, show about the air? About the crystal? To what is the change due?

## Experiment 24 — Deliquescence

MATERIALS. — As below.

Put on a glass plate or a block of wood a small piece of several of the following substances: Sodium hydroxide, calcium chloride, potassium hydroxide, magnesium chloride, table salt, rock salt, zinc chloride, potassium carbonate, sodium nitrate. Leave them exposed to the air for an hour or more. Describe any marked change which takes place. What does the change show about the air? About the substance? Compare the general change with that of Exp. **23**. To what is the change due?

THIS PAGE IS LOCKED TO FREE MEMBERS
Purchase full membership to immediately unlock this page

Get Smart

Over 2,000 years of human knowledge in 797,885 volumes

Instant access $8.99/month

Continue

*Fair usage policy applies

will be changed to brown. Test in the same way some of the impure water used in I. Compare the results.

(*d*) Test separate portions of distilled water for mineral matter. (1) *Chlorides.* Add a few drops of nitric acid and of silver nitrate solution to a little distilled water. Proceed in the same way with some of the impure water used in I. Compare the results. The white, curdy solid is silver chloride, which is formed by the chemical action between silver nitrate and the dissolved chloride. All soluble chlorides produce the same result. (2) *Sulphates.* Add a few drops of barium chloride solution to a little distilled water. Proceed in the same way

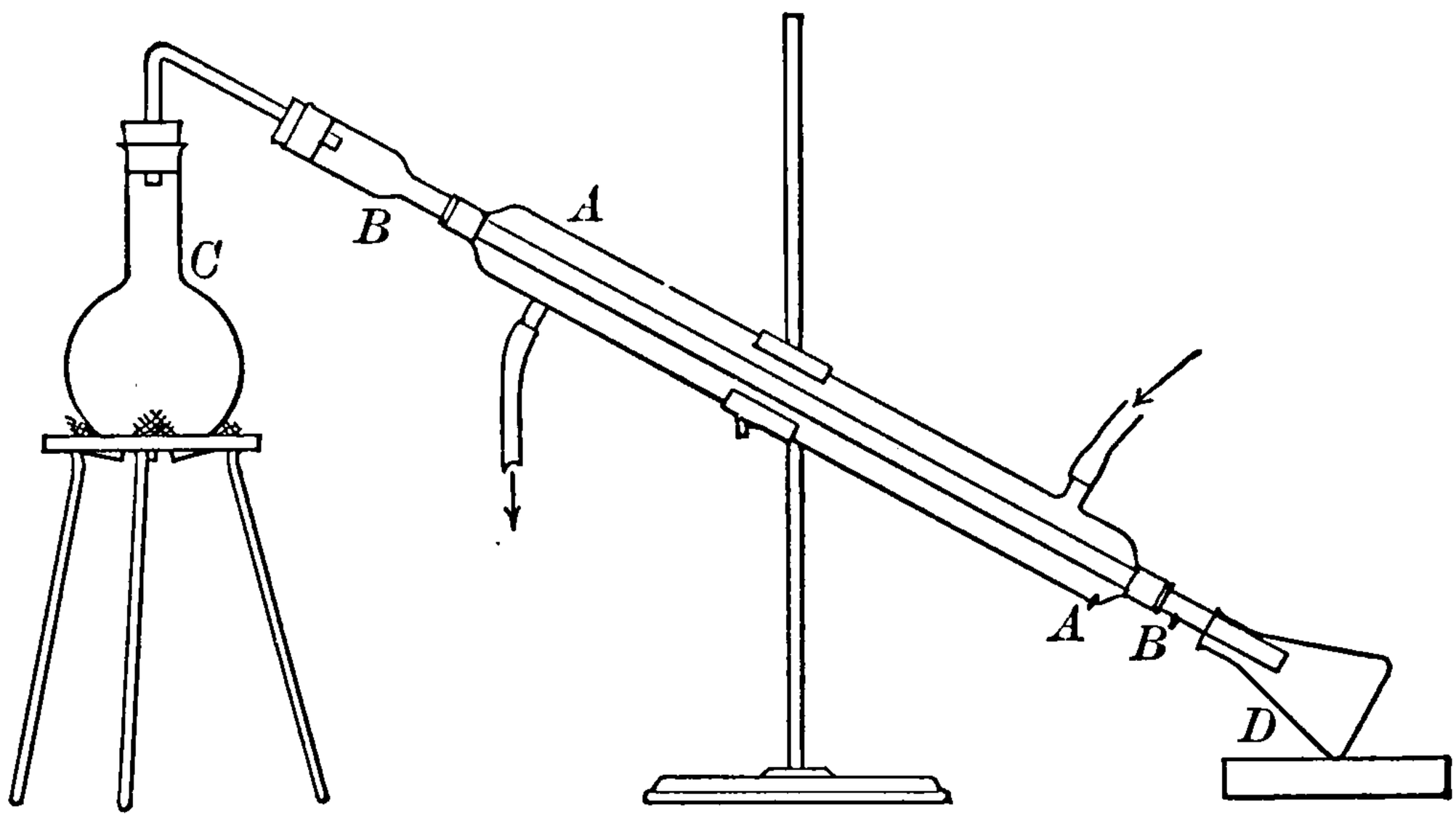


Fig. 117. — Condenser.

with some of the impure water used in I. Compare the results. The white, fine precipitate is barium sulphate, which is formed by the chemical action between barium chloride and the dissolved sulphate; its formation is a test for any sulphate in solution. (3) *Calcium (or lime) compounds.* Add a few drops of ammonium oxalate solution to some distilled water and also to some of the impure water used in I. Compare the results. The white precipitate is calcium oxalate. Its formation serves as a test for dissolved calcium compounds.

(*e*) If time permits, test samples of water from various sources for organic and mineral matter.

## Experiment 27 — Solubility of a Given Solid

MATERIALS. — Solution of potassium dichromate, evaporating dish, gauze-covered ring and iron stand, water bath.

Weigh an evaporating dish on the scales, and record the weight in the notebook (see below). Obtain from the Teacher about 50 cc.

of a concentrated solution of potassium dichromate of known concentration. Transfer about 25 cc. into the weighed dish by a graduate, noting exactly the volume taken. (Ask for instructions if this operation is not familiar.) Weigh the dish and contents, and record the weight. Stand the dish on a water bath and evaporate to dryness. While the solution is evaporating, the form of record may be prepared as shown below; complete the evaporation by transferring the dish to a gauze-covered ring (Fig. 110) and heating strongly. When the dish is cool, weigh, and record the weight as shown below. Heat again on the gauze, cool, and weigh; if the two weights are the same (or nearly so), accept the first weighing, but if the weights are considerably different, heat intensely, cool, and weigh until the weight is nearly constant.

Complete the entries in the form of record, and calculate the weight of the solid held in solution by 100 gm. of water.

RECORD

(*a*) Weight of dish .....
(*b*) Volume of solution .....
(*c*) Weight of dish and contents before heating ....
(*d*) Weight of dish and contents after heating .....
(*e*) Weight of solute ($d - a$) .....
(*f*) Weight of solvent ($c - d$) .....

## Experiment 28 — Supersaturation

MATERIAL. — Sodium thiosulphate.

Fill a test tube half full of crystallized sodium thiosulphate and add two or three cubic centimeters of water. Warm slowly. As solution occurs, heat gradually to boiling. When all the solid has dissolved, pour the solution into a warm, clean, dry test tube, insert a cork or a wad of cotton in the test tube, and let it stand undisturbed until cool. Observe the contents and compare with Exp. **20**. Then drop in a small crystal of sodium thiosulphate and watch for any simple but definite change. What happens? Observe and state the final result.

## Experiment 29 — Qualitative Composition of Water

MATERIALS. — As in Exp. **12 D** and **E** for **A**, and in Exp. **16 A** for **B**; also, for **C**, chlorine tube fitted with cork, chlorine water, mortar or porcelain dish, iron stand and clamp, joss stick.

**A.** *Hydrogen.* Recall, perform, or repeat (if necessary) Exp. **12 D** and **E**. State the essential result of each experiment. What evidence do these experiments give about the composition of water?

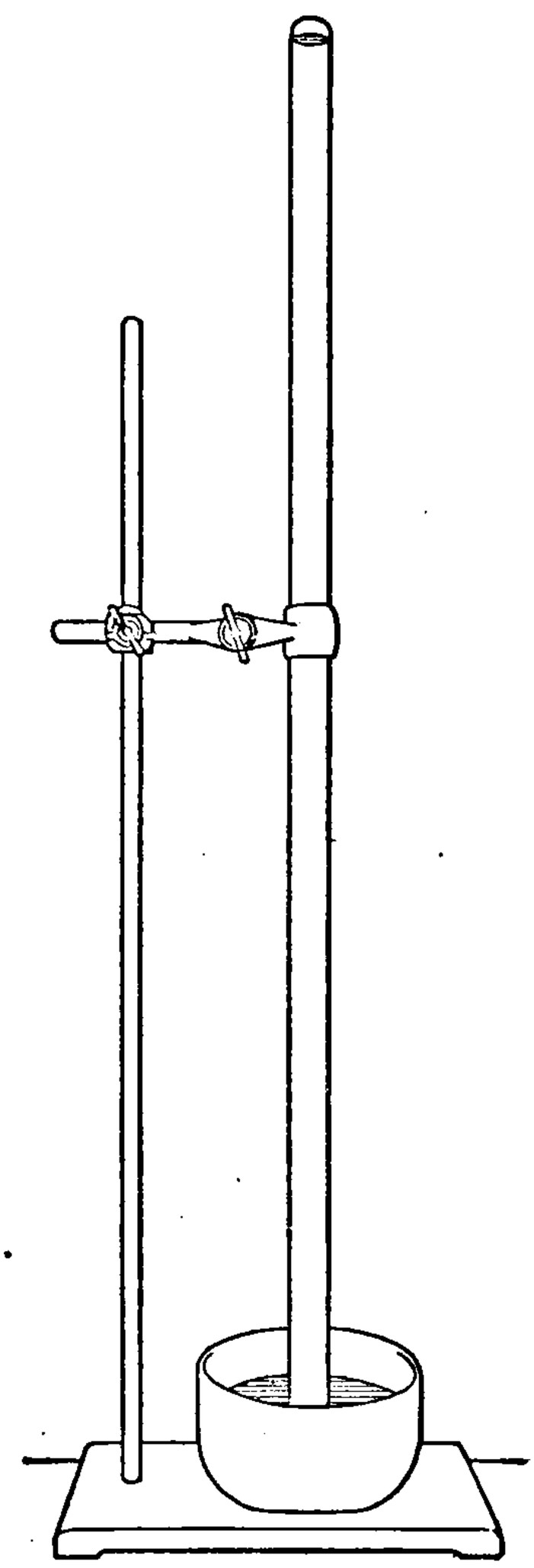

Fig. 118. — Apparatus for Showing that Oxygen is a Constituent of Water.

**B.** *Hydrogen and Oxygen.* Recall, perform, or repeat (if necessary) Exp. **16 A**. State the essential result. What additional evidence does this experiment give about the composition of water?

**C.** *Oxygen.* Obtain 250 cc. of chlorine water from the Teacher. If fresh chlorine water is not available, construct a chlorine generator, as described in Exp. **33 I**, and prepare about 250 cc. of chlorine water by causing the gas to bubble through a bottle of water until the water smells strongly of the gas.

Fill the tube with chlorine water, cover the open end with the thumb or finger, invert the tube, and immerse the open end in a mortar or an evaporating dish, which should be nearly full of chlorine water (Fig. 118). Clamp the tube in an upright position, and stand the whole apparatus where it will receive the direct sunlight for several hours. Bubbles of gas will soon appear, rise, and collect at the top. When sufficient

THIS PAGE IS LOCKED TO FREE MEMBERS
Purchase full membership to immediately unlock this page

HISTORY

Tens of thousands of important historical sources, many previously unobtainable, are now available for the first time with a Forgotten Books Full Membership.

Unlimited Access
$8.99/month

Continue

*Fair usage policy applies

close to the end of the glass tip. Open the stopcock again, let out a little gas slowly, then hold a lighted match for an instant at the end of the tip, and immediately thrust a taper into the small and almost colorless flame. Repeat several times. What is the gas?

**Required Exercises.** — 1. Describe the whole experiment and sketch the apparatus.

2. What does this experiment show about the composition of water?

## Supplementary Experiment

### Experiment 31 — Preparation and Properties of Hydrogen Dioxide

Materials. — Three gm. of barium dioxide, manganese dioxide, potassium permanganate solution, joss stick, lead nitrate solution, hydrogen sulphide solution.

I. *Preparation.* Pour about 25 cc. of dilute hydrochloric acid into a bottle and cool in running water. Add slowly about 3 gm. of powdered barium dioxide; stir constantly during the mixing and for several minutes after. Let the mixture stand until the solid settles somewhat, then filter. If the filtrate is not clear, repeat the filtration through the same paper until it is clear.

II. *Properties.* (*a*) Heat a little of the filtrate from I; observe the result. Now add a little powdered manganese dioxide to the heated liquid and observe the result. Test the escaping gas for oxygen. What is the result?

(*b*) Add several drops of potassium permanganate solution to a little of the filtrate from I and observe the result. Is a gas evolved? If not, add more potassium permanganate solution, and test the gas for oxygen.

(*c*) Prepare a little lead sulphide by adding a few drops of hydrogen sulphide solution to dilute lead nitrate solution. Shake well, add hydrogen dioxide solution (preferably the commercial solution), and warm gently. Observe the result.

(*d*) Examine the inner end of the cork stopper of a bottle of hydrogen dioxide. Explain.

# LAW OF CONSTANT COMPOSITION

## Supplementary Experiment

(See note to Exp. **13**.)

### Experiment 32 — The Combination of Oxygen with Magnesium

Materials. — Porcelain crucible and cover, powdered magnesium, forceps, pronged tripod (or iron ring and triangle), crucible block.

Clean and dry the crucible and cover, and weigh both together on the balance. Record the weight in the notebook as shown below. Put from .4 to .5 gm. of magnesium in the crucible, and weigh again (including cover). Record the weights thus: —

Weight of crucible, cover, and magnesium .....
Weight of crucible and cover .....
Weight of magnesium .....

Stand the crucible on the tripod, as shown in Fig. 120 (or on a triangle supported by a ring), and heat for five minutes with a flame which just touches the bottom of the crucible. Grasp the cover firmly by the ring with the clean forceps, cautiously lift it, and if the magnesium glows, cover the crucible instantly. Repeat this operation at frequent intervals, gradually increasing the heat, until the glow ceases to spread through the mass; then adjust the cover so that a small opening is left between the cover and the crucible, and heat strongly for ten or fifteen minutes. If the contents has ceased to glow, heat the crucible, uncovered, for five or ten minutes. Take care not to upset the cover by accident or insecure handling with the forceps. At no time, should the flame touch the cover of the crucible; generally speaking, the flame should reach as high outside as the magnesium does inside.

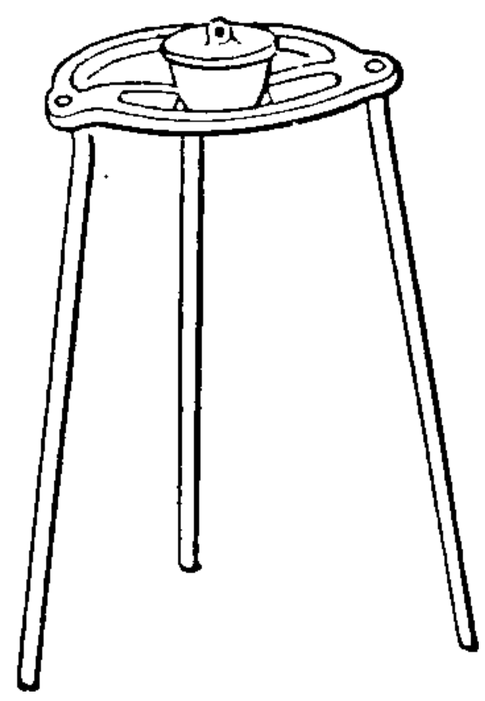

Fig. 120.—Covered Crucible Supported on a Tripod.

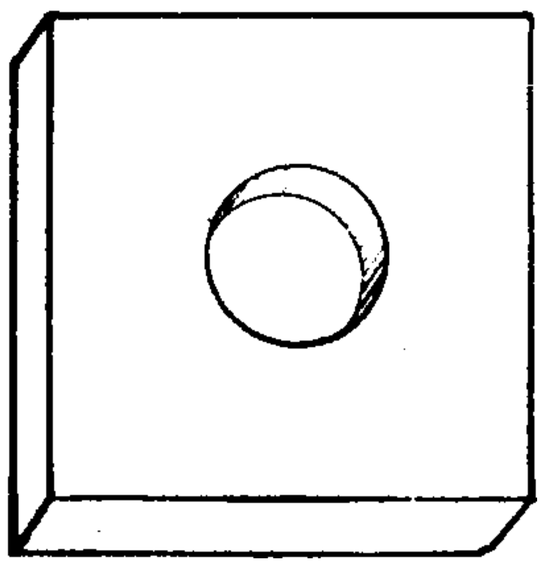

Fig. 121.—Crucible Block for Carrying a Crucible.

Cool the crucible gradually. When cool enough to touch, it is cool enough to weigh. In carrying the crucible to and from the balance, it should be placed in the crucible block (Fig. 121). Weigh and record in the notebook thus: —

Weight of crucible, cover, and contents, after heating .....
Weight of crucible, cover, and contents, before heating .....
Weight of oxygen which has combined with the magnesium ..

Heat the uncovered crucible again strongly for five or ten mintues, cool, and weigh as before. If the weight is not the same, continue until the last two weights are approximately equal. Record each weight.

From the weights of the magnesium taken and the oxygen found, calculate the ratio in which the two elements combined. Submit the result to the Teacher for criticism before throwing away the contents of the crucible.

NOTE. — The crucible, if blackened, can be cleaned by heating a little sodium hydroxide in it and then washing thoroughly with water.

THIS PAGE IS LOCKED TO FREE MEMBERS
Purchase full membership to immediately unlock this page

Get Smart

Over 2,000 years of human knowledge in 797,885 volumes

Instant access $8.99/month

Continue

*Fair usage policy applies

II. *Properties.* (*a*) Twist one end of the copper wire around a wad of iron thread (Fig. 123), heat the edge of the wad for an instant in the flame, and quickly lower it into a bottle of chlorine. Observe the result. Dissolve the contents of the bottle in a little water, filter if not clear, and test the clear solution for a chloride (see Exp. **26** II (*d*) (1)). State the result.

(*b*) Into a bottle of dry chlorine put a piece of calico, litmus paper (both colors), and paper containing writing in black and in red ink. Allow the whole to remain undisturbed for a few minutes and then observe the change in the materials, if any. Add several drops of water, shake the bottle, and then observe the change. Draw a general conclusion from the whole experiment.

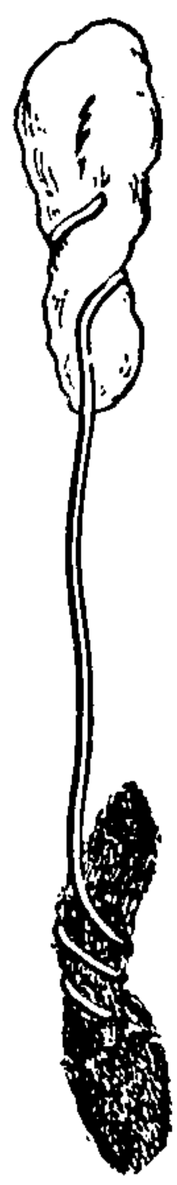

Fig. 123. — Wads of Cotton and Iron Thread.

(*c*) Lower a burning taper a short distance into a bottle of chlorine, and observe the two products as the taper burns. Draw a conclusion. Verify it thus: Twist the other end of the copper wire used in (*a*) around a piece of cotton (Fig. 123); cautiously heat about 10 cubic centimeters of turpentine in a large test tube,[1] saturate the cotton with the hot turpentine, and lower the cotton into a bottle of chlorine. Observe the result, especially at the beginning of the reaction.

NOTE. — As soon as II (*c*) is performed, pour the contents of the flask into a waste jar in the hood. The bottle used in the latter part of (c) may be cleaned by adding water, a little sand, and several pieces of paper, and then shaking vigorously.

[1] Hold the test tube with the holder. Remember that turpentine ignites easily. If the turpentine catches fire, press a damp towel over the mouth of the test tube.

### Experiment 34 — The Characteristic Property of Bleaching Powder

MATERIALS. — Bleaching powder, dilute sulphuric acid, colored cloth, unbleached cloth, glass rod, evaporating dish, two bottles.

Put a little bleaching powder into an evaporating dish, and add enough water to make a thin paste. Add 10 cubic centimeters of dilute sulphuric acid to a bottle half full of water. Fill the other bottle nearly full of water. Tear off a small piece of the colored cloth for a sample. Dip the rest of the colored cloth into the bleaching powder and then into the acid, passing it back and forth several times. Finally wash the cloth thoroughly in the bottle of water, squeeze out the excess of water, let the washed cloth dry somewhat, and then compare its color with that of the sample. Describe the change in the appearance of the cloth.

Proceed in the same way with the unbleached cloth, and state the result.

### Experiment 35 — Preparation and Properties of Hydrogen Chloride and Hydrochloric Acid

(*Perform this experiment in the hood.*)

MATERIALS. — The *apparatus* shown in Fig. 122; 20 grams of sodium chloride, concentrated sulphuric acid, joss stick, litmus paper (blue), ammonium hydroxide.

I. *Preparation.* (*a*) Hydrogen chloride. Put 8 cubic centimeters of water into a small bottle or an evaporating dish, cautiously add 12 cubic centimeters of concentrated sulphuric acid, and stir until the two are mixed. While this mixture is cooling, weigh the sodium chloride, slip it into the flask, and arrange the apparatus as shown in Fig. 122. Introduce half the cold acid mixture through the tube, let it settle through the sodium chloride, and then introduce the remaining acid. Heat the flask gently with a low flame, as in the preparation of chlorine. Hydrogen chloride is evolved, and passes into the bottle, which should be removed when full, as directed under chlorine. A piece of moist blue litmus paper

held at the mouth of the bottle will show when it is full. Collect three bottles of the gas, cover each, when filled, with a glass plate, and set aside until needed for II.

(*b*) Hydrochloric acid. As soon as the third bottle of gas has been collected, removed, and covered, put in its place a bottle one fourth full of water. Adjust the delivery tube *E* so that the lower end is a short distance above the surface of the water. Continue to heat the flask at intervals, and the gas will be absorbed by the water. Shake the bottle occasionally. Meanwhile perform II.

II. *Properties of hydrogen chloride.* Proceed as follows with the gas prepared in I (*a*): — (*a*) Insert a blazing joss stick once or twice into one bottle, and observe the result. Compare the behavior of hydrogen chloride with that of hydrogen and oxygen under similar conditions.

(*b*) Hold a piece of wet filter paper near the mouth of the same bottle. Observe and describe the result. What is the cause?

(*c*) Invert a bottle of the gas, and stand it in a vessel of water (e.g. the pneumatic trough). Observe any change inside the bottle after a few minutes. What property of the gas does the result illustrate? Verify the observation by a simple test applied to the contents of the bottle.

(*d*) Drop into the remaining bottle of gas a piece of filter paper wet with ammonium hydroxide. Describe the result. What is the name of the product?

(*e*) State other properties of hydrogen chloride which you have observed, e.g. color, odor, density, behavior with litmus.

III. *Properties of hydrochloric acid.* Remove the bottle in which the hydrogen chloride is being absorbed, and study the aqueous solution of the gas as follows: — (*a*) Determine its general properties, e.g. taste (cautiously), action with litmus, and with magnesium. State the results.

(*b*) Add to a test tube half full of the hydrochloric acid a few drops of nitric acid and of silver nitrate solution. Describe the precipitate. What is its name? Shake the test tube

THIS PAGE IS LOCKED TO FREE MEMBERS
Purchase full membership to immediately unlock this page

HISTORY

Tens of thousands of important historical sources, many previously unobtainable, are now available for the first time with a Forgotten Books Full Membership.

Unlimited Access
$8.99/month

Continue

*Fair usage policy applies

### Experiment 38 — General Properties of Bases

MATERIALS. — Sodium hydroxide and potassium hydroxide solutions, ammonium hydroxide, litmus paper (both colors), glass rod.

Determine the general properties of bases as follows: —

(*a*) Rub a little of each solution between the fingers, and describe the feeling.

(*b*) *Cautiously* taste each liquid by touching to the tip of the tongue a rod moistened with each, and describe the result.

(*c*) Test each solution with litmus paper. Describe the result.

(*d*) Summarize the general results of this experiment. Compare acids and bases as to taste and to reaction with litmus.

### Experiment 39 — A Property of Many Salts

MATERIALS. — Litmus paper (both colors), glass rod, dilute solutions of chemically pure sodium chloride, potassium nitrate, potassium sulphate, barium chloride, potassium chlorate, potassium bromide, and strontium nitrate.

Test the solutions with litmus paper. Describe the result in each case. Compare the litmus reaction of these salts with the reaction of acids and bases.

### Experiment 40 — Neutralization

MATERIALS. — Sodium hydroxide (solid), hydrochloric acid, blue litmus paper, glass rod, evaporating dish, gauze-covered ring.

Dissolve a small piece of sodium hydroxide in an evaporating dish one-third full of water. Add a little dilute hydrochloric acid, and stir well; continue to add the acid, until a drop of the well mixed solution taken from the dish upon a clean glass rod just reddens blue litmus paper. Then evaporate the solution to dryness by heating the dish on a gauze-covered ring (Fig. 110). Since the residue retains traces of the excess of hydrochloric acid added, it is necessary to evaporate all of this acid before applying any test. Heat the dish until the yellow color disappears, then moisten the

whole residue carefully with a litte warm water, and heat again to evaporate the last traces of acid; it is advisable to add and evaporate two portions of water.

Test a portion of the residue with moist litmus paper to find whether it has acid, basic, or neutral properties. Taste a little. Test (*a*) a solution of a little of the residue for a chloride, and (*b*) a portion of the solid residue for sodium by heating a little on a test wire in the flame. What is the residue?

## Supplementary Experiments

### Experiment 41 — Preparation of Chlorine from Various Substances

(*Each pupil need not perform all of this experiment.*)

Materials. — Sodium chloride, manganese dioxide, concentrated hydrochloric acid, potassium chlorate, potassium permanganate, potassium dichromate, lead tetroxide, lead dioxide.

**A.** Put a little sodium chloride and manganese dioxide in a test tube, mix thoroughly by shaking, add a little dilute sulphuric acid, and warm gently. Observe the color of the liberated gas, its odor (very cautiously), and its action upon moist litmus paper. What is the gas?

**B.** Put a few crystals of potassium chlorate in a test tube, add a little dilute hydrochloric acid, and warm gently. Observe and test the gaseous product as in **A.** What is the gas?

**C.** Put a few crystals of potassium permanganate in a test tube, add not more than 5 cc. of concentrated hydrochloric acid, and observe and test the gaseous product as in **A.** What is the gas?

**D.** Proceed as in **C**, using potassium dichromate. Warm gently. What gas is produced?

**E.** (*a*) Proceed as in **D**, using lead tetroxide (red lead). What gas is produced? (*b*) Repeat (*a*), using lead dioxide.

## Experiment 42.— Preparation of Hydrogen Chloride from Various Substances

(*Each pupil need not perform all of this experiment.*)

MATERIALS. — Concentrated hydrochloric acid, concentrated sulphuric acid, silver nitrate solution, litmus paper, ammonium chloride, barium chloride, calcium chloride.

**A.** Put a little concentrated hydrochloric acid into a test tube, add a few drops of concentrated sulphuric acid, and test the escaping gas with (*a*) moist blue litmus paper, (*b*) moist filter paper, and (*c*) a glass rod to the end of which a little silver nitrate solution adheres. State the results. What is the gas.

**B.** Put a little ammonium chloride into a test tube, add a few drops of concentrated sulphuric acid, warm slightly, if necessary, and test the escaping gas as in **A.** State the results. What is the gas?

**C.** Repeat **B**, using several chlorides, e.g. barium chloride, calcium chloride. State the results. Draw a general conclusion.

## Experiment 43 — Aqua Regia

MATERIALS. — Gold leaf, concentrated nitric and hydrochloric acids, glass rod.

Touch a small piece of gold leaf with the end of a moist glass rod, and wash the gold leaf into a test tube by pouring a few cubic centimeters of concentrated hydrochloric acid down the rod. Warm gently. Does the gold dissolve? Wash another piece of gold leaf from a clean glass rod very carefully into another test tube with concentrated nitric acid. Heat as before. Does the gold dissolve? Pour the contents of one tube cautiously into the other. Warm gently, if no change occurs. Does the gold dissolve?

**Required Exercises.** — 1. What compound of gold is formed by its interaction with *aqua regia?*

2. Would chlorine water act like *aqua regia* upon gold? (If in doubt, try the experiment.)

THIS PAGE IS LOCKED TO FREE MEMBERS
Purchase full membership to immediately unlock this page

Get Smart

Over 2,000 years of human knowledge in 797,885 volumes

Instant access $8.99/month

Continue

*Fair usage policy applies

## Experiment 45 — Preparation and Properties of Nitrogen

MATERIALS. — Apparatus as shown in Fig. 124, three bottles, joss stick, iron thread, small piece of sulphur and a deflagrating spoon, 10 grams of ammonium chloride and 10 grams of sodium nitrite.

I. *Preparation.* Weigh the two substances, put them in the flask, and add 50 cc. of water. Arrange the apparatus as shown in Fig. 124. Fill the cup of the dropping funnel with water, and then ask to have the apparatus inspected.

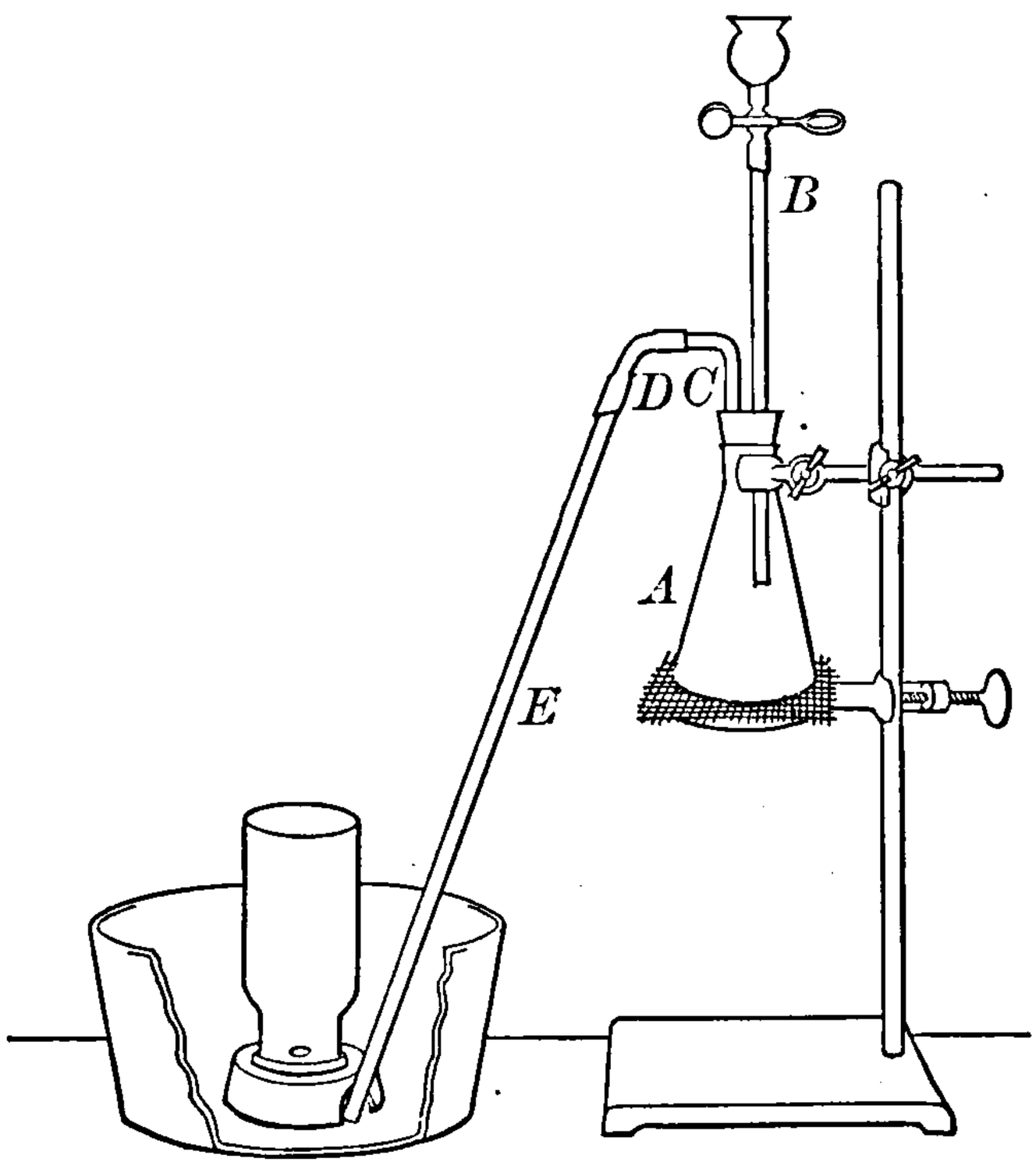

Fig. 124. — Apparatus for Preparing Nitrogen.

Heat the flask gently with a low flame and as soon as the nitrogen bubbles regularly through the water, slip the collecting bottle over the hole in the support. Heat gently, but enough to keep the gas bubbling slowly through the water. Collect three bottles of nitrogen. *Caution.* — If the mixture in the flask begins to froth or the gas comes off too rapidly, remove the flame and let in a little water; if it continues to froth, pinch the clamp and let out the excess of gas. As soon as the frothing ceases, close the clamp and continue to heat. Remove the delivery tube as soon as the three bottles of nitrogen have been collected. Proceed at once with II.

II. *Properties.* (*a*) Thrust a *blazing* joss stick into a bottle of the gas. Observe and state the result.

(*b*) Put a small piece of sulphur in a deflagrating spoon, light the sulphur, lower it into a bottle of nitrogen, and keep

it there about half a minute. Observe the result. Withdraw, and observe the result. State the results.

(*c*) Wind one end of a copper wire around a wad of iron thread, kindle it along one edge, and quickly thrust the glowing iron into a bottle of nitrogen. Observe and state the result.

**Required Exercises.** — 1. Describe briefly the preparation of nitrogen.

2. Sketch the apparatus, if time permits.

3. Compare the characteristic properties of nitrogen with those of oxygen found by similar experiments.

## Experiment 46 — Preparation and Properties of Ammonia Gas and Ammonium Hydroxide

(*Perform this experiment in the hood.*)

MATERIALS. — 15 grams of lime (calcium oxide), 15 grams of ammonium chloride, 3 bottles, 2 glass plates, pneumatic trough filled as usual, litmus paper, joss stick, filter paper. The *apparatus* is shown (in part) in Fig. 125. The flask *A* is provided with a one-hole rubber stopper to which is fitted the right-angle bend *C* connected with a glass tube *B* (12 centimeters or 5 inches long) by the rubber tube *D*.

I. *Preparation.* (*a*) Ammonia gas. Weigh the lime and ammonium chloride separately, and mix them thoroughly on a piece of paper. Slip the mixture into the flask, and add a little water, thereby transforming the calcium oxide into calcium hydroxide. Quickly insert the stopper with its tubes, and clamp the flask as shown in Fig. 125.

Slip the glass delivery tube *B* into a bottle, invert the bottle, and hold it so that the tube is in the position shown in the figure. Heat the flask gently with a low flame. Ammonia gas will pass up into the bottle, which should be removed, when full, and covered with a glass plate. A piece of moist red litmus paper held near the mouth will show (by change in color) when the bottle is full. *Do not smell at the mouth of the bottle.* Collect two bottles and set them aside until needed for II.

(*b*) Ammonium hydroxide. As soon as the last bottle has been collected, rearrange the apparatus to absorb the ammonia gas in water, as in the case of hydrochloric acid (see Exp. **35** I (*b*)). Replace the glass tube *B* by the delivery tube *E*, which should pass through the wooden block *F* into a bottle *G* one-fourth full of water, so that the end is just above the surface of the water. Continue to heat the flask gently at intervals, and the gas will be absorbed by the water. Shake the bottle occasionally. Meanwhile perform II.

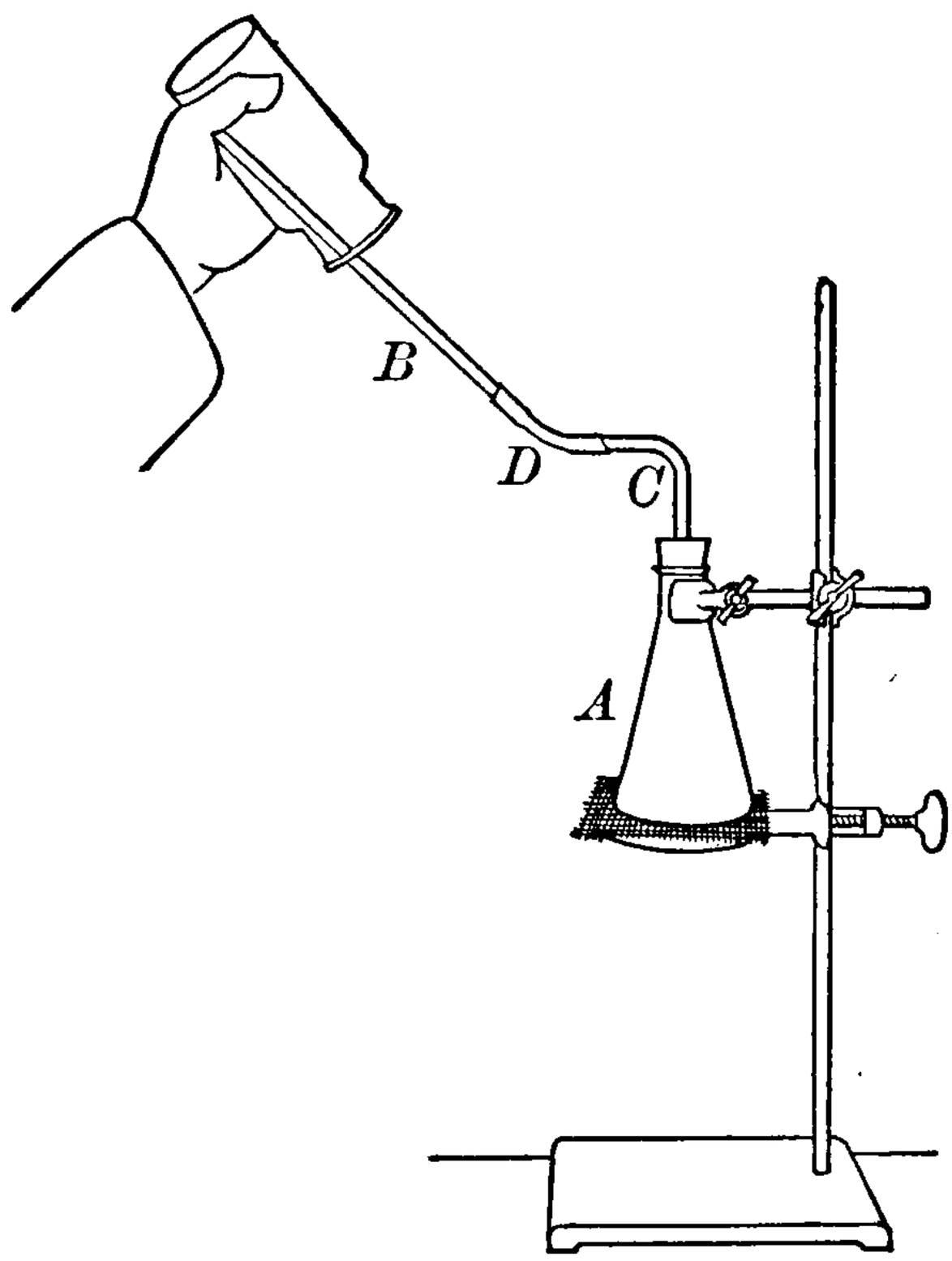

Fig. 125. — Apparatus for Preparing Ammonia.

II. *Properties of ammonia gas.* Proceed as follows with the ammonia gas prepared in I (*a*): — (*a*) Test the gas in one bottle with a blazing joss stick. Observe the result. Compare the behavior of ammonia gas with that of hydrogen, oxygen, and hydrogen chloride under similar circumstances.

(*b*) Invert the same bottle in the pneumatic trough, and shake it vigorously, taking care to keep the mouth under water. Observe any change noticed inside the bottle after a few minutes. What property of the gas is revealed? Is it a marked property? Test the contents of the bottle with litmus paper (both colors), and state the result.

(*c*) Pour a few drops of concentrated hydrochloric acid into an empty, warm, dry bottle. Rotate the bottle until the inside is well moistened with the acid. Cover it with a glass plate, invert it, and stand it upon a covered bottle of ammonia gas. Remove both plates at once, and hold the bottles together by grasping them firmly about their necks. Observe the result.

THIS PAGE IS LOCKED TO FREE MEMBERS
Purchase full membership to immediately unlock this page

HISTORY

Tens of thousands of important historical sources, many previously unobtainable, are now available for the first time with a Forgotten Books Full Membership.

Unlimited Access
$8.99/month

Continue

*Fair usage policy applies

nitric acid runs down the neck into the test tube. Then unclamp the retort, and remove the test tube carefully. Leave the nitric acid in the test tube until needed for Exp. **48**, corking the test tube unless the acid is to be used soon.

NOTE. — Allow the contents of the retort to cool, add a little water, boil until the solid in the bulb is reduced to a small bulk or dissolved, and pour it into a waste jar in the hood.

### Experiment 48 — Some Properties of Nitric Acid

MATERIALS. — Concentrated and dilute nitric acid, quill toothpick, sulphur, zinc, magnesium.

**A.** *Concentrated.* (*a*) Observe the color of the concentrated nitric acid prepared in Exp. **47**. Compare it with the concentrated nitric acid in several bottles in the laboratory and with the typical specimen of concentrated nitric acid placed upon the side shelf by the Teacher. State the result.

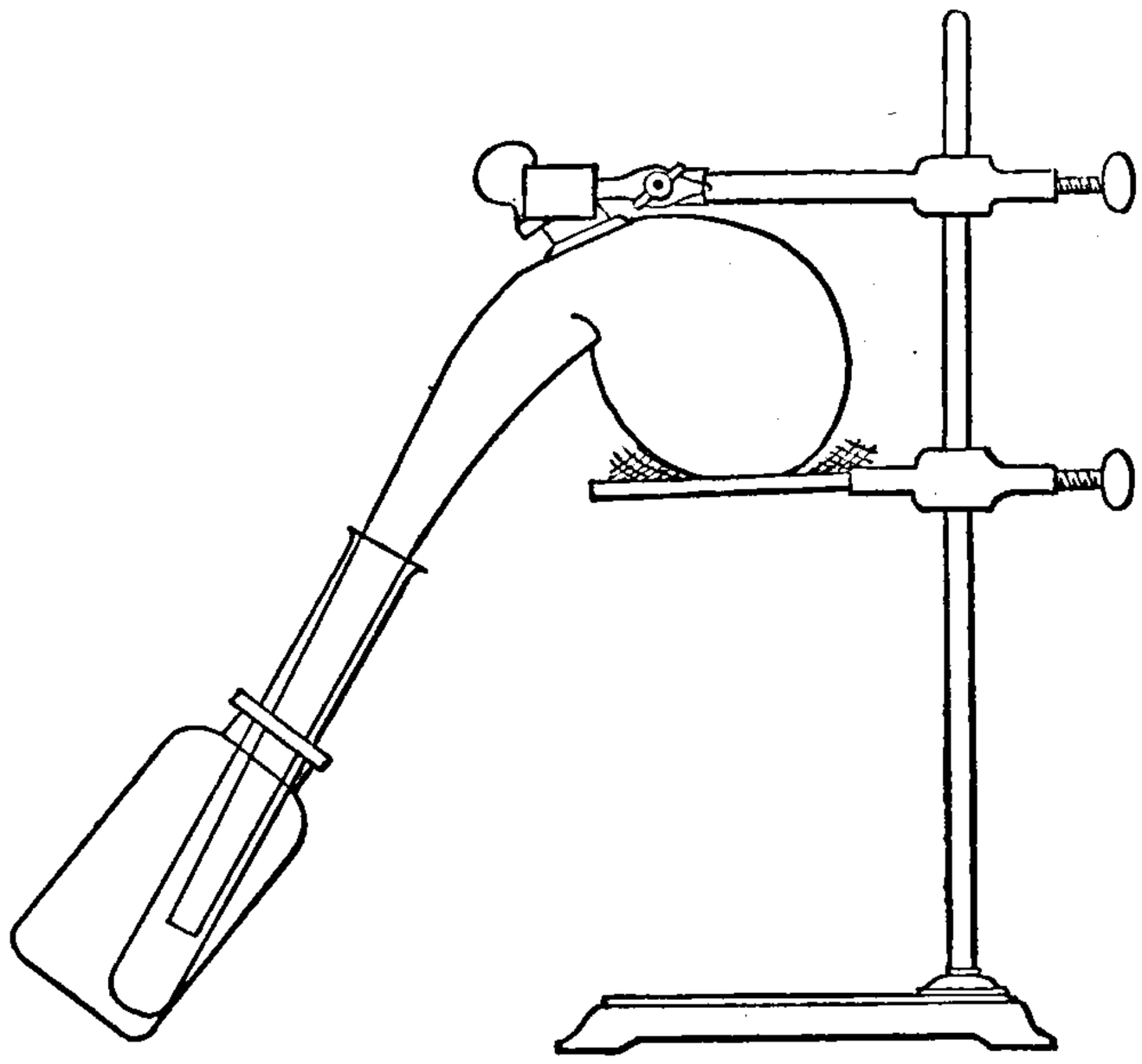

Fig. 126. — Apparatus for Preparing Nitric Acid.

(*b*) Hold a piece of wet filter paper at the mouth of the test tube (or a bottle) of concentrated nitric acid. Observe and state the result. Compare the behavior of nitric acid with that of concentrated hydrochloric acid.

(*c*) Repeat (*b*), using a piece of filter paper moistened with ammonium hydroxide. What is the name of the product?

(*d*) Pour 5 cubic centimeters of concentrated nitric acid very carefully into a test tube, drop in a piece of a quill toothpick, and observe any change in the color of the quill. Heat very gently, and observe the effect upon the quill. State the final result.

(*e*) Put about 1 gram of sulphur in a test tube, add carefully 5 cubic centimeters of concentrated nitric acid, attach the test tube holder, and boil very cautiously — in the hood — for a few minutes. Add 10 to 15 cubic centimeters of water, filter the solution, if it is not clear, and test the filtrate for a sulphate by adding barium chloride solution. State the result.

(*f*) Stand three test tubes in the test tube rack, put a piece of zinc into one, copper into another, and magnesium ribbon (rolled into a ball) into the third. Add a little concentrated nitric acid to each test tube. Observe the result. Test the gaseous product for hydrogen, and state the result.

**B.** *Dilute.* (*a*) Recall the litmus test. State it. Prepare some very dilute nitric acid by pouring a few drops of the ordinary dilute acid into a test tube half full of water, dip a glass rod into the diluted acid, and touch the rod very cautiously to the tongue. State the result.

(*b*) Recall, perform, or repeat (if necessary) one or more experiments illustrating the formation of salts of nitric acid. State the results of these experiments.

(*c*) Add dilute nitric acid to zinc, to copper, and to magnesium, as in **A** (*f*). State the results.

**Required Exercises.** — 1. What property of nitric acid was shown by **A** (*b*)? By (*d*)? By (*e*)?

2. How does the action in **A** (*b*) and (*c*) compare with that of hydrochloric acid under similar circumstances?

3. Apply question 2 to **A** (*f*). (If in doubt, try the experiment.)

## Experiment 49 — Test for Nitric Acid and Nitrates

MATERIALS. — Concentrated nitric and sulphuric acids, ferrous sulphate, sodium nitrate.

**A.** To a test tube one-fourth full of water add a little concentrated nitric acid and shake. Add an equal volume of concentrated sulphuric acid. Shake until the acids are well mixed, then cool by holding the test tube in running water. Make a cold, dilute solution of fresh ferrous sulphate, and

pour this solution carefully down the side of the test tube upon the nitric acid mixture. Where the two solutions meet, a brown or black layer will appear, consisting of a compound formed by the interaction of the nitric acid and the ferrous sulphate.

**B.** This test can also be used for a nitrate. Proceed as above with a concentrated solution of sodium nitrate in place of nitric acid. Record the result.

## Experiment 50 — Preparation and Properties of Nitric Oxide and Nitrogen Dioxide

MATERIALS. — 10 grams of copper (borings or fine pieces of sheet metal), concentrated nitric acid, pneumatic trough filled as usual, three bottles, three glass plates, matches, piece of copper wire (15 centimeters or 6 inches long); and the *apparatus* shown in Fig. 127.

Put the copper into the bottle, and arrange the apparatus to collect the gas over water (Fig. 127). Adjust the delivery tube, fill three bottles with water, and invert them in the trough. Dilute 25 cubic centimeters of concentrated nitric acid with an equal volume of water, and introduce just enough of this dilute acid through the dropping tube into the bottle to cover the copper. If the action is too vigorous, add water through the dropping tube; if too weak, add a little of the dilute nitric acid. Collect three bottles of the gas. Cover them with glass plates and stand them aside until needed.

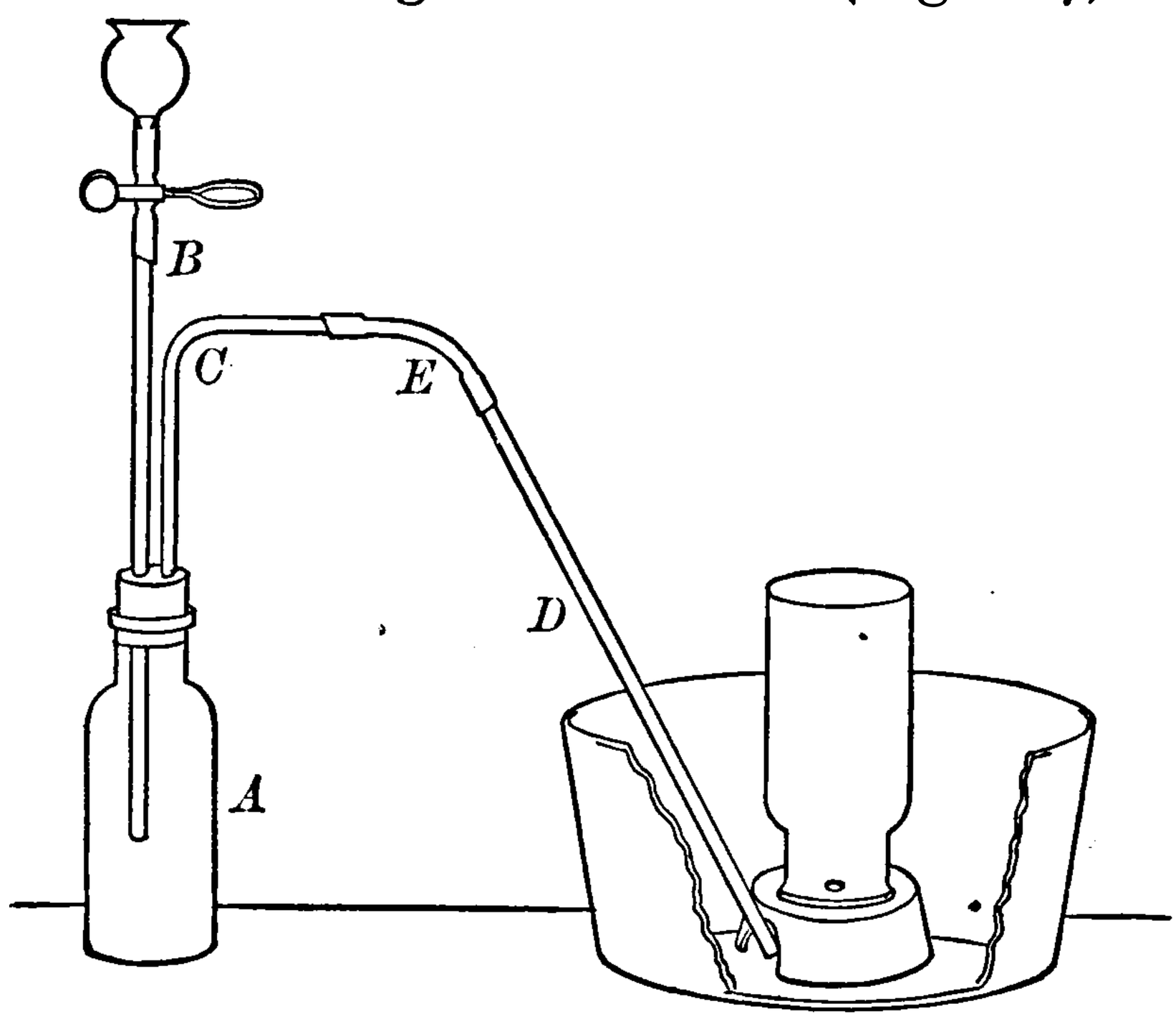


Fig. 127. — Apparatus for Preparing Nitric Oxide.

THIS PAGE IS LOCKED TO FREE MEMBERS
Purchase full membership to immediately unlock this page

Get Smart

Over 2,000 years of human knowledge in 797,885 volumes

Instant access $8.99/month

Continue

*Fair usage policy applies

color of the gaseous product and of the final solid product. Test the gaseous product for oxygen; state the result. Devise an experiment to determine the qualitative composition of the solid product; submit the details to the Teacher before proceeding.

(*b*) Pulverize a little lead nitrate and heat it in a test tube as in (*a*). State the results.

## Supplementary Experiments

### Experiment 52 — Preparation of Nitrogen from Various Substances

Materials. — Ammonium dichromate, sand, sodium nitrate, potassium nitrate, barium nitrate, powdered iron.

Prepare nitrogen by one or more of the following methods: —

**A.** *Ammonium Dichromate.* Put about 2 grams of ammonium dichromate in a test tube, add 5 grams of dry clean sand, and mix the two substances thoroughly by shaking. Attach a test tube holder, heat the mixture gently, and test the escaping gas for nitrogen. State the result.

**B.** *Nitrates and Iron.* Mix thoroughly about 1.5 grams of sodium nitrate, 1.5 grams of potassium nitrate, 2 grams of barium nitrate, and 10 grams of iron; each substance must be dry and powdered. Put the mixture in a test tube, attach a test tube holder, spread the mixture along the test tube, and heat gently. Test the escaping gas for nitrogen. State the result.

### Experiment 53 — Preparation of Ammonia Gas from Various Substances

(*Each pupil need not perform all of this experiment.*)

Materials. — Gelatin, soda-lime, substances enumerated in **A** (*b*), ammonium sulphate, sodium hydroxide solution, ammoniacal liquor.

**A.** *Nitrogenous Substances.* (*a*) Mix a little gelatin and soda-lime on a piece of paper, slip the mixture into a test tube, attach a test tube holder, heat, and test the escaping gas with moist red litmus paper. State the result.

(*b*) Repeat (*a*), using soda-lime with hair, feather, leather scraps, pieces of horn, or hide powder. Observe and state the results.

**B.** *Ammonium Salts.* (*a*) Dissolve a little ammonium chloride in water, add a little sodium hydroxide solution, warm gently, and test (cautiously) the liberated gas by its odor. What is the gas?

(*b*) Repeat (*a*), using ammonium sulphate and sodium hydroxide or potassium hydroxide solution. State the result.

(*c*) Mix and grind together in a mortar a little ammonium sulphate and calcium oxide (lime). Test (by the odor) the gaseous product, and state the result.

**C.** *Ammoniacal Liquor.* Add powdered calcium oxide (lime) to a test tube half full of ammoniacal liquor, warm gently, and test the escaping gas for ammonia. State the result.

## Experiment 54 — Interaction of Nitric Acid and Metals

MATERIALS. — Zinc, copper, tin, iron, concentrated nitric acid.

Stand four test tubes in the test-tube rack. Slip into one a few pieces of zinc, into another a small piece of tin, into the third a small quantity of copper borings, and into the fourth a small quantity of clean iron filings. Add to each test tube in succession enough concentrated nitric acid to cover the metal. Observe the changes, particularly (1) the vigor of the action, (2) the properties of the solid products, especially color and solubility, and (3) properties of the gaseous products. Tabulate these observations.

**Required Exercise.** — Name the solid product of the reaction in each case. The gaseous product.

## Experiment 55 — Preparation and Properties of Sodium Nitrite

MATERIALS. — 5 grams of sodium nitrate, 5 grams of lead, iron crucible, glass rod.

Heat the mixture of lead and sodium nitrate in an iron crucible, which is supported on the ring of an iron stand. Stir the melted mass occasionally with a glass rod, and continue the heating until most of the lead has disappeared. Allow the mass to cool, cover it with water, heat the water to boiling, let the crucible cool, and then filter; add a little water to the residue in the crucible, boil, and filter this portion. This operation extracts the sodium nitrite. Add to the combined

filtrates several drops of concentrated sulphuric acid. Observe the result. How does the result compare with the action of concentrated sulphuric acid on sodium nitrate?

**Required Exercises.** — 1. What chemical change did the sodium nitrate undergo?

2. What is the test for a nitrite?

3. What is the name of the yellowish residue?

## Experiment 56 — Preparation and Properties of Nitrous Oxide

MATERIALS. — 10 grams of ammonium nitrate, pneumatic trough, wad of iron thread, copper wire, three bottles, three glass plates, sulphur, deflagrating spoon, joss stick. The apparatus is shown in Fig. 128. The parts *A*, *C*, *D*, *E* have been used before; *F*, *G*, *H* are exactly the same as *C*, *D*, *E* respectively; *B* is a large test tube.

Construct and arrange the apparatus as shown in Fig. 128. Put 10 grams of ammonium nitrate in the flask *A*. The large test tube *B* remains empty. The end of *H* rests on the bottom of the pneumatic trough, which is filled as usual. Be sure the apparatus is gas-tight.

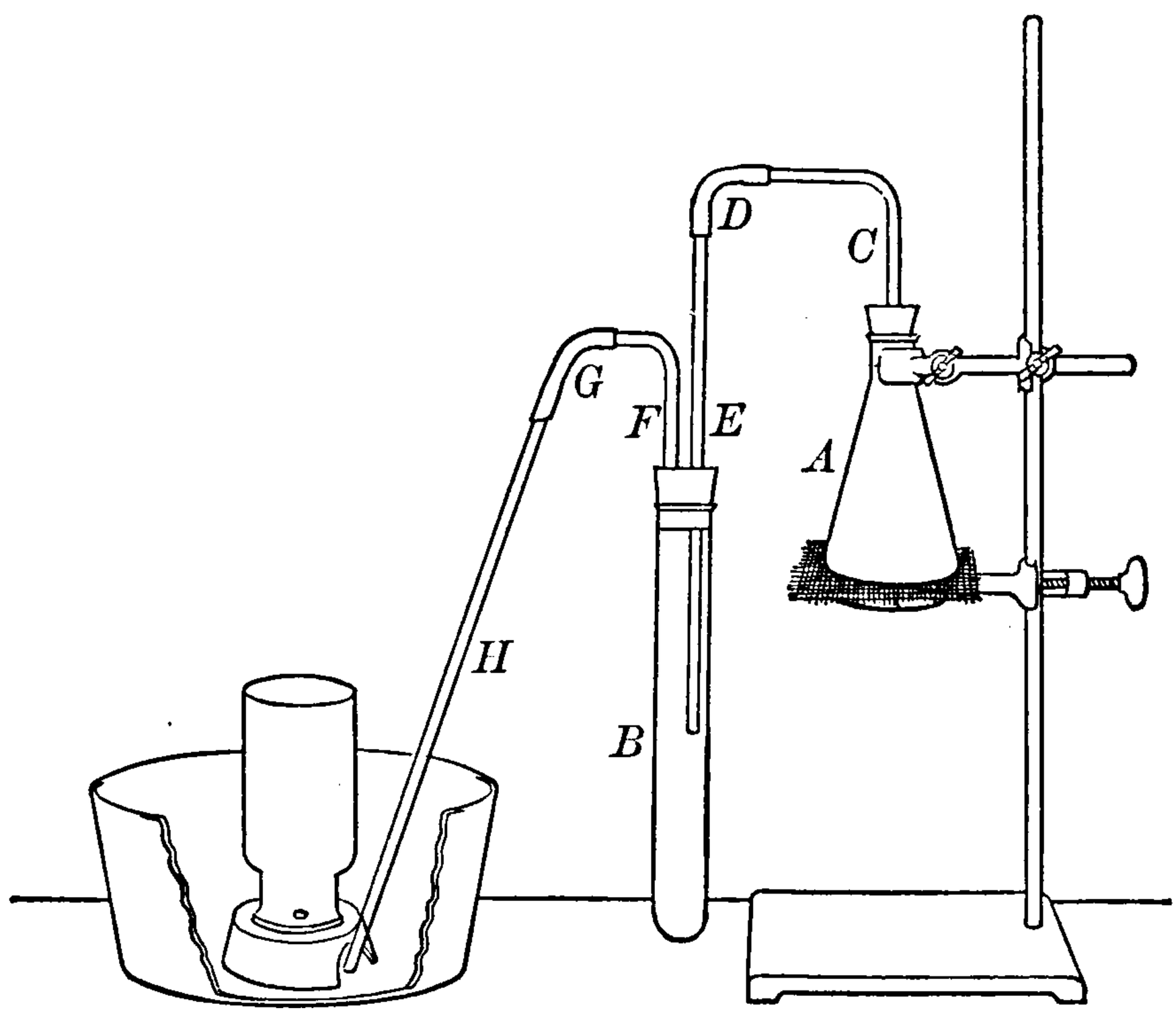


Fig. 128. — Apparatus for Preparing Nitrous Oxide.

I. *Preparation.* Heat the flask gently with a low flame, and readjust the apparatus if it leaks. The ammonium nitrate melts at first and then appears to boil. Regulate the heat so that the evolution

THIS PAGE IS LOCKED TO FREE MEMBERS
Purchase full membership to immediately unlock this page

HISTORY

Tens of thousands of important historical sources, many previously unobtainable, are now available for the first time with a Forgotten Books Full Membership.

Unlimited Access
$8.99/month

Continue

*Fair usage policy applies

## Experiment 57 — Per Cent of Oxygen and Nitrogen in Air

MATERIALS. — Solutions of pyrogallic acid (10 per cent) and potassium hydroxide (50 per cent), pneumatic trough half filled with water, 250 and 25 cubic centimeter graduated cylinders. The *apparatus* (Fig. 129) consists of a bottle holding about 250 cubic centimeters provided with a tightly fitting one-hole rubber stopper through which passes a glass plug. The plug, which is made by closing both ends of a glass tube about 10 centimeters (4 inches) long, should fit tight.

The volume of the bottle is found thus: — Fill the bottle full of water from the pneumatic trough. Push the stopper into the bottle as far as it will go, insert the glass plug until the inner end is flush with the inner surface of the stopper, and then draw a line around the stopper with a lead pencil to mark its position. Remove the stopper. Pour water from the bottle into the 250 cubic centimeter graduate until the graduate is full (to the 250 cc. mark) or the bottle is empty; read the volume. If the bottle holds more than 250 cubic centimeters, the last portion of the water in the bottle may be poured into the 25 cubic centimeter graduate. Record the total volume of the bottle as shown below.

Fig. 129. — Apparatus for finding Per Cent of Oxygen and Nitrogen in Air.

Measure exactly 10 cubic centimeters of pyrogallic acid in the 25 cubic centimeter graduate, and pour it into the bottle. Add 20 cubic centimeters of potassium hydroxide solution, insert the rubber stopper quickly to the proper mark, and then push the glass plug through the stopper until the inner end is flush with the inner surface of the stopper. Shake the bottle

vigorously a few minutes, and then invert it and watch the surface of the liquid for bubbles of air, which will enter if the apparatus leaks. If a leak is detected, ask the Teacher for directions before proceeding. If the apparatus is tight, continue the shaking for about half an hour. During this operation the oxygen is absorbed by the solution.

Place the bottle on its side beneath the water in the pneumatic trough, inclining it slightly so that the lower edge of the bottle rests upon the bottom of the trough and the hole in the stopper is *beneath* the surface of the water; grasp the bottle firmly by the neck and stopper, and gradually pull out the plug, taking care (1) not to pull out the stopper and let any of the solution run out, and (2) to keep the hole in the stopper constantly below the surface. After the water has stopped running in, insert the plug, lift out the bottle, and measure carefully the volume of the final liquid in the bottle.

Record and calculate as follows: —

(a) Volume of original solution .....
(b) Capacity of bottle.....
(c) Volume of air taken (b − a) .....
(d) Final volume of liquid .....
(e) Volume of water which entered (d − a) .....
(f) Per cent of water which entered (e ÷ c) .....

The per cent of entering water equals the per cent of gas absorbed, therefore

(g) Per cent of oxygen .....
(h) Per cent of nitrogen (100 − g) .....

NOTE. — This experiment disregards the argon and carbon dioxide in the air.

### Experiment 58 — Water Vapor in the Air

(*a*) Perform, recall, or repeat (if necessary) Exp. **24** (Deliquescence). What does the result show about the air?

(*b*) Place a piece of lime upon a glass plate or a block of wood and let it remain exposed to the air an hour or more. State the result. Does this experiment verify the result in (*a*)? If so, how?

(*c*) Devise other experiments to show that air contains water vapor. Submit the details to the Teacher before performing the experiment.

### Experiment 59 — Carbon Dioxide in the Air

MATERIALS. — Calcium hydroxide solution, barium hydroxide solution, bottle, air blast apparatus (for (*b*)).

(*a*) Pour 25 cc. of clear calcium hydroxide solution into a bottle and let it stand exposed to the air an hour or more. Examine the surface of the liquid. State the change that has occurred. Explain the change.

(*b*) If an air blast apparatus is available, force air through a bottle half full of clear barium hydroxide solution until the liquid is conspicuously changed. Describe and explain the change.

(*c*) What do (*a*) and (*b*) show about the air?

## SUPPLEMENTARY EXPERIMENT

### Experiment 60 — Testing Air

(*a*) Apply Exps. **58** and **59** to the air in different parts of the building or to the air outside the building. Start the tests at the same time and obtain comparable results. State the results.

(*b*) Apply Exp. **58** to the air on several days, especially days when the weather varies considerably.

(*c*) If a hygrometer is available, use it in determining the relative humidity of the air out doors and inside the laboratory.

(*d*) Apply Exp. **59** to the air in the laboratory, out doors, and in a recitation room which is in use. Proceed with the testing as in (*a*) (this experiment).

THIS PAGE IS LOCKED TO FREE MEMBERS
Purchase full membership to immediately unlock this page

Get Smart

Over 2,000 years of human knowledge in 797,885 volumes

Instant access $8.99/month

Continue

*Fair usage policy applies

into the bottle *A*, taking the same care as before. Hydrogen will be slowly liberated, and will collect in the receiving bottle. Let the action continue until all the zinc disappears. Then force over into the receiving bottle all gas remaining in the apparatus by admitting water carefully as before. Lay a piece of dry filter paper upon the bottom of the bottle, grasp the bottle firmly, carefully joggle it to dislodge any gas bubbles which may be underneath the support, slide the bottle from the support, and lower it into the water until the water is about the same level inside and outside the bottle; then slip two pieces of filter paper beneath the bottle, cover the mouth firmly, remove the bottle from the trough and stand it, right side up, upon the table. Stand a thermometer in the trough. Fill a 250 cc. graduate exactly to the mark with water, remove the paper cover from the bottle, and very carefully fill the bottle with water from the graduate; read and record (as V′, below) the exact volume of water added — which is, of course, the volume of hydrogen gas liberated. Read the thermometer while the bulb is in the water, and record the reading. Record the barometer reading. Find the vapor pressure corresponding to the recorded temperature (see Appendix, § **4**), and record it as *a* below.

RECORD

Weight of zinc taken (Zn) . . . . . .
Observed volume of hydrogen (V′) . . . . .
Temperature (t). . . . . .
Pressure (P) . . . . . .
Vapor pressure (*a*) . . . . . .
Corrected volume of hydrogen (V) . . . . .
Equivalent of zinc (E) . . . . . .

*Calculation.* Reduce the observed volume (V′) of hydrogen to the volume (V) it would have at 0° C, 760 mm., and dry state by the formula given in Part I, § **40**, viz. —

$$V = \frac{V' (P - a)}{760 (1 + (.00366 \times t))}$$

Since 1000 cc. of dry hydrogen weigh .0898 gm., the weight of the corrected volume (V) is found by 1000: V:: .0898: X. And the weight of zinc equivalent (E) to one gram of hydrogen is found by X: Zn:: 1: E.

Submit the result to the Teacher for criticism (before taking the apparatus apart, if convenient).

## Experiment 62 — Equivalent of Magnesium to Hydrogen

MATERIALS. — A 100 cc. tube and wooden trough, magnesium ribbon, thermometer, barometer.

Weigh accurately between .065 and .075 gm. of magnesium ribbon, preferably in a single piece. Have the wooden trough half full of water. Pour 8 cc. of concentrated hydrochloric acid into the 100 cc. tube and fill the tube completely with cold water. Put the magnesium into the tube, cover the end of the tube with the thumb or finger, invert the tube, stand it in the trough, but keep the end loosely closed to prevent the magnesium from slipping out. As the acid reaches the magnesium, action begins vigorously. Hydrogen rises in the tube and usually carries the magnesium with it. Watch the operation, and agitate the tube to prevent the magnesium from sticking to the inside. The action is very rapid and must be watched constantly, being over in about two minutes. If a piece of magnesium should stick to the inside of the tube, close the end of the tube tightly, lift it from the water, incline it enough to loosen the magnesium, and then quickly straighten the tube and put the end beneath the water.

When all the magnesium has disappeared, close the end of the tube, remove the tube to a tall jar of water, and let it stand five minutes; then, without touching the tube with the bare hands, adjust the height so that the water levels are the same inside and outside of the tube, and read the volume. Read the barometer and the thermometer (keeping the bulb in the water). Calculate the equivalent of magnesium as in Exp. **61**.

## Supplementary Experiments

### Experiment 63 — Equivalent of Iron to Copper

The object of this experiment is to find the weight of copper precipitated by a known weight of iron.

Materials. — Beaker, glass rod, iron powder, copper sulphate solution of known strength, alcohol.

Prepare or obtain about 50 cc. of a copper sulphate solution which contains .1 gm. of copper to 1 cc. Weigh a clean dry beaker. Weigh it in accurately about 2 gm. of iron powder. Add slowly about 25 cc. of the copper sulphate solution. The iron precipitates the copper as a fine powder. Stir occasionally with the glass rod. About one hour is needed for complete precipitation. When it is judged that all the iron has been used up, let the copper settle, and pour off the liquid down the rod into a dish, taking care not to lose any copper. Add water to the beaker, stir, let settle, and decant as before. If the wash water contains particles of copper, let it settle, pour off the water and add the copper to the beaker. Wash until the washings give no test for a sulphate (i.e. no white precipitate of barium sulphate upon addition of barium chloride). Finally add a little alcohol and heat to dryness very cautiously on a piece of asbestos. When dry and cool, weigh quickly before the copper oxidizes.

*Calculation.* Assume 31.8 as the equivalent of copper and calculate the equivalent of iron.

### Experiment 64 — Equivalent of Aluminium to Hydrogen

Materials. — As in Exp. **61**.

Proceed as in Exp. **61** (Equivalent of Zinc), but (*a*) weigh out about .17 gm. of aluminium (taking care to weigh exactly the amount used) and (*b*) use hot concentrated hydrochloric acid instead of dilute sulphuric acid. Record and calculate as in Exp. **61**.

### Experiment 65 — Equivalent of Calcium to Hydrogen

Materials. — As in Exp. **62**.

Proceed as in Exp. **62**, but use about .115 gm. of calcium. Record and calculate as in Exp. **62**.

THIS PAGE IS LOCKED TO FREE MEMBERS
Purchase full membership to immediately unlock this page

HISTORY

Tens of thousands of important historical sources, many previously unobtainable, are now available for the first time with a Forgotten Books Full Membership.

Unlimited Access
$8.99/month

Continue

*Fair usage policy applies

copper sulphate, sodium sulphate, aluminium sulphate, magnesium sulphate, zinc sulphate.

**Required Exercises.** — 1. What *ions* are in solutions of all sulphates?

2. Explain the general result obtained above in terms of the theory of electrolytic dissociation.

## Experiment 68 — General Properties of Acids, Bases, and Salts

MATERIALS. — As in Exps. **37, 38, 39, 40.**

Recall and state the general properties of acids, bases, and salts, or repeat (if necessary) Exps. **37, 38, 39, 40.**

## Experiment 69 — The Litmus Reaction of Different Salts

MATERIALS. — Acid sodium phosphate, acid sodium sulphate, potassium (or sodium) nitrite, sodium acetate, potassium iodide, sodium carbonate, potassium carbonate, potassium dichromate, sodium sulphate, copper sulphate, ferric chloride.

Prepare, or obtain, dilute solutions of the salts mentioned above, and test them with both kinds of litmus paper.

**Required Exercises.** — 1. Classify these salts under the headings *Normal*, *Acid*, and *Basic*.

2. Name the salts used above that undergo hydrolysis. Interpret hydrolysis by the theory of electrolytic dissociation.

## Experiment 70 — Electrolysis of Copper Sulphate

MATERIALS. — Dilute solution of copper sulphate, small battery jar (or beaker), two electrodes (pieces of electric light carbon) and connection wires, battery of four or more cells (or other source of electric current).

Fill the battery jar about two-thirds full of dilute copper sulphate solution. Wind one end of a piece of the wire around one end of each electrode and hang the electrodes in the solution by bending the wire over the edge of the jar (or by the device shown in Fig. 32, Part I). Before turning on the current (or making the final connection), examine each electrode and note the absence of any deposit. (After the apparatus is

set up, the Teacher should mark the anode and cathode.) Turn on the current and observe what takes place at the anode. When the current has run about ten minutes, shut it off, and examine each electrode. Compare with their appearance before the electrolysis took place. Upon which electrode is there a deposit? What is the deposit?

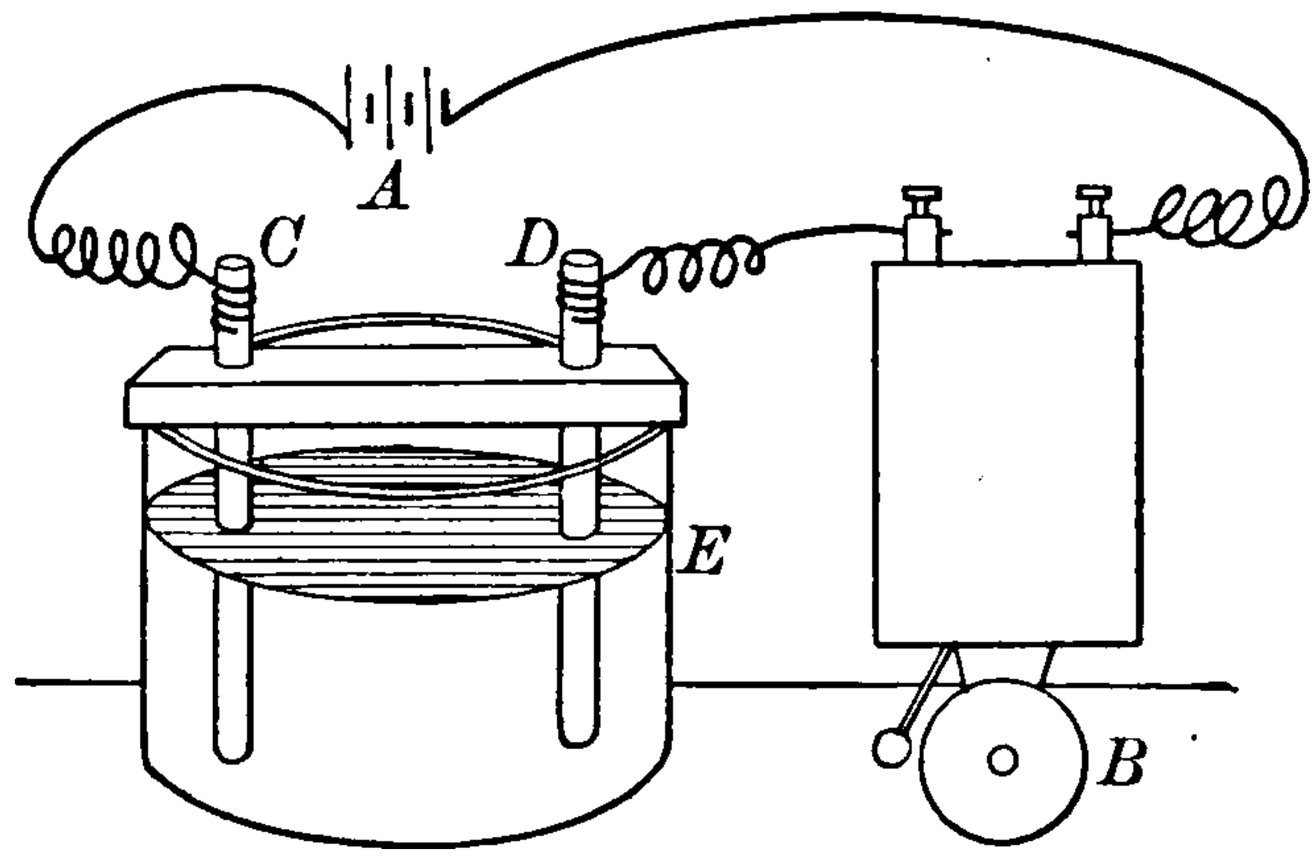


Fig. 131.— Apparatus for Showing the Behavior of Solutions toward an Electric Current.

Sketch the apparatus, and describe the electrolysis of copper sulphate in terms of the theory of electrolytic dissociation, using the sketch in your interpretation.

### Experiment 71 — Electrolysis of Sodium Sulphate

MATERIALS. — Sodium sulphate solution, litmus solution (preferably neutral), U-tube clamped to an iron stand, narrow aluminium electrodes (to fit the U-tube) and connection wires, battery of four or more cells (or other source of electric current).

Fill the U-tube two-thirds full of sodium sulphate solution, and add enough litmus solution to produce a faint color after shaking. Attach the U-tube to the iron stand, insert the electrodes, and note the color of the solution in each arm of the U-tube. (After the apparatus is set up, the Teacher should mark the anode and cathode.) Turn on the current and let it run until there is a change in color in each arm of the U-tube. Note this color and note also whether gas is liberated in each arm of the U-tube.

Sketch the apparatus (except the battery) and interpret the electrolysis of sodium sulphate by the theory of electrolytic dissociation, using the sketch in your interpretation.

## Supplementary Experiments

### Experiment 72 — Electrolytes and Non-Electrolytes

Materials. — See Part I, § **156.** The apparatus is shown in Fig. 131.

Proceed with different solutions as described in Part I, § **156.** Tabulate the results.

### Experiment 73 — Chemical Behavior of Electrolytes in Solution

Materials. — Solutions of silver nitrate, silver sulphate, potassium chloride, barium chloride, barium nitrate, potassium sulphate.

**A.** (*a*) Add a few drops of potassium chloride solution to a little silver nitrate solution. Shake well and observe the result.

(*b*) Repeat (*a*), using potassium chloride and silver sulphate solutions. Compare the results. Are the precipitates identical?

**B.** (*a*) Proceed as in **A** (*a*) with potassium sulphate and barium chloride solutions. Observe the result.

(*b*) Proceed as in **B** (*a*) with potassium sulphate and barium nitrate solutions. Compare the result with that in **B** (*a*). Are the precipitates identical?

**Required Exercises.** — 1. What have solutions of silver nitrate and silver sulphate in common? Solutions of barium chloride and barium nitrate?

2. Name the ionic substances in the solutions in **A.** In **B.**

### Experiment 74. — Electrolysis of Potassium Iodide

Materials. — Starch, potassium iodide, mortar and pestle, filter paper, sheet of metal (tin or iron), battery of two or more cells.

Grind together in a mortar a lump of starch and a crystal of potassium iodide. Add enough water to make a thin liquid. Dip a strip of filter paper into the mixture, and spread the wet paper upon the sheet of metal. Press the end of the wire attached to the zinc (of the battery) upon the metal, and draw the other wire across the sheet of paper. The marks are caused by iodine which is liberated from the potassium iodide and colors the starch.

**Required Exercises.** — 1. Describe briefly this experiment.

2. Iodine is a non-metal. Are iodine ions anions or cations? At what electrode is iodine liberated?

THIS PAGE IS LOCKED TO FREE MEMBERS
Purchase full membership to immediately unlock this page

Get Smart

Over 2,000 years of human knowledge in 797,885 volumes

Instant access $8.99/month

Continue

*Fair usage policy applies

**B.** *Copper Sulphate.* Proceed as in **A** with dilute copper sulphate solution.

**Required Exercises.** — 1. Describe the experiment and sketch the apparatus.

2. Give the name and formula of all the ions and state the electrodes to which each kind of ion migrates.

3. Give the name and formula of the colored ions.

## Experiment 78 — Neutralization by Titration

The object of this experiment is to find the number of grams of the compound HCl in 1 cubic centimeter of a solution of hydrochloric acid (i.e. HCl dissolved in water) by neutralizing the acid with a solution of sodium hydroxide of known concentration.

MATERIALS. — Two burettes (Fig. 132), two beakers, a glass rod, phenol-phthalein solution, and solutions of hydrochloric acid and sodium hydroxide (the latter of known concentration and obtained from the Teacher).

Fill each burette (or start with each full) — one with the acid solution and one with the base solution, as marked. Place the waste beaker under each burette in turn and allow the solution to run out slowly until the bottom of the meniscus rests on the O line when the eye is on a level with the same line. (See Fig. 132.) Set the waste beaker aside. Put a clean beaker under the base burette and let exactly 15 cc. run into the beaker; record as in I below. Remove the beaker, add 2 or 3 drops of phenol-phthalein solution, put the beaker under the acid burette and let the acid solution run in slowly, stirring constantly with the clean rod until the red color just disappears and the solution becomes colorless. Read the exact volume of acid solution added and record as in I. Pour the solution out of this beaker, wash the beaker, and proceed, as before, with a second 15 cc. of NaOH solution. Record as in II. Wash the beaker and proceed with a third 15 cc. of NaOH solution. Record as in III.

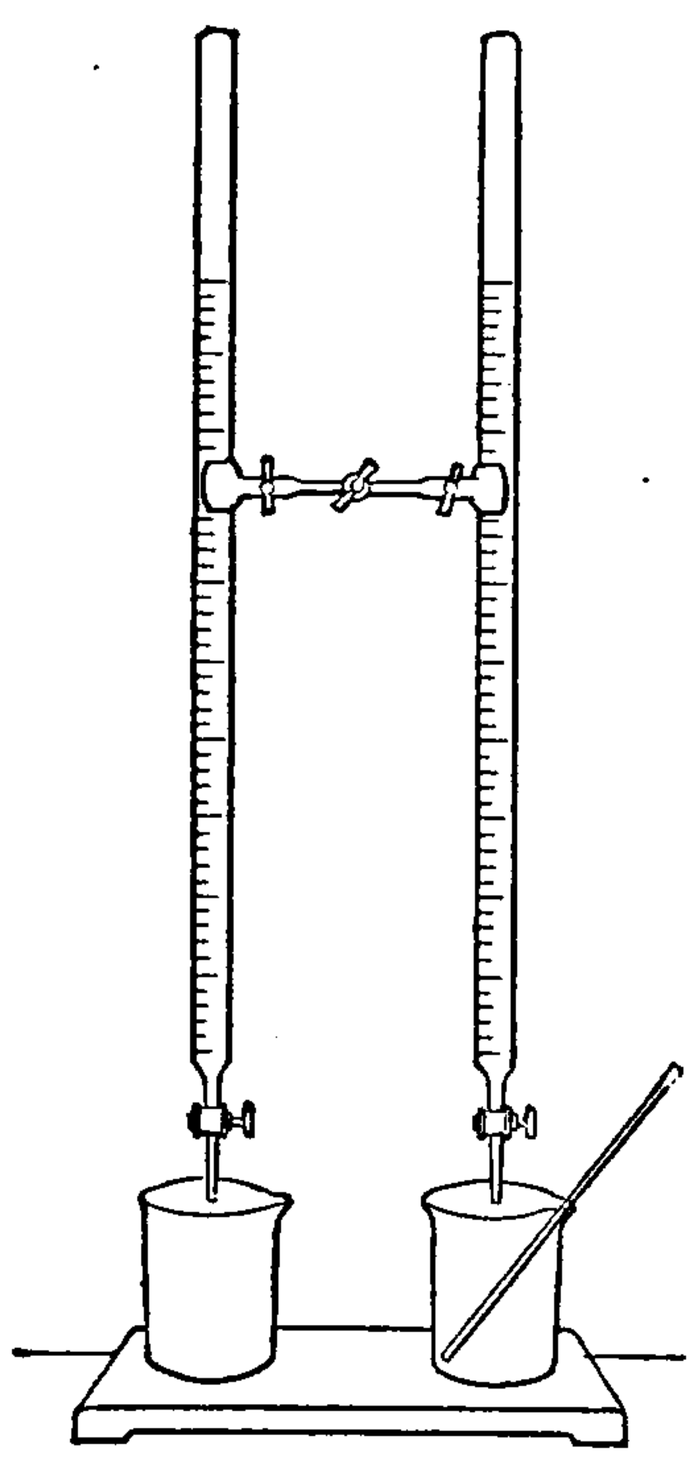

Fig. 132. — Burettes. (Enlarged Section (on page 9) Shows the Curved Surface of the Solution. Correct Reading of the Volume of the Solution is along Line I.)

RECORD

| | | | |
|---|---|---|---|
| I. | NaOH sol. 0 — 15 = 15 | | |
| | HCl " 0 — = | 1 cc. NaOH sol. = | cc. HCl sol. |
| II. | NaOH sol. 15 — 30 = 15 | | |
| | HCl " — = | 1 cc. NaOH sol. = | cc. HCl sol. |
| III. | NaOH sol. 30 — 45 = 15 | | |
| | HCl " — | 1 cc. NaOH sol. = | cc. HCl sol. |

*Calculation:* — (*a*) Write the equation, including the weights of the NaOH and HCl.

(*b*) Find (from I, II, III) the average number of cc. of HCl solution equal to 1 cc. of NaOH solution.

(*c*) 1 cc. of NaOH solution contains ? gm. (ask Teacher) NaOH.

(*d*) From the value in (*c*) and the relative values of the solutions together with the values in the equation, calculate the number of gm. of the compound HCl in 1 cc. of the acid solution. Submit the result to the Teacher for criticism.

## Experiment 79 — Preparation of Salts

(*Each pupil need not perform all of this experiment.*)

MATERIALS. — Calcium, calcium oxide, calcium carbonate, calcium chloride, silver nitrate solution, evaporating dish, gauze-covered ring.

**A.** *Acid and a Metal.* Put a small piece of clean calcium in an evaporating dish, add a little dilute hydrochloric acid, stand the dish on a gauze-covered ring, and heat the dish gently until the calcium disappears, adding more acid if necessary. Then evaporate the solution to dryness in the hood, taking care to heat gently toward the end of the evaporation to prevent spattering. Add just enough water to moisten the residue, and evaporate again to dryness. Heat the residue until no more fumes of hydrochloric acid are evolved. Let the dish cool, and loosen the contents with a glass rod. Test portions of the residue for (*a*) calcium and (*b*) a chloride as follows: (*a*) Touch a clean, moist test wire to a small piece of the residue, and hold it in the outer and lower edge of the Bunsen flame. The yellow-red color imparted to the flame is caused by the calcium, and is one test for this element. (*b*) Dissolve a little of the residue in a test tube half full of water, and apply the usual test for a chloride to this solution. State the result.

**Required Exercises.** — 1. What is the name and formula of the residue formed in this experiment? Write the equation for the reaction.

2. Suggest an experiment to verify the answer to 1.

3. Suggest experiments to prove that the compound is neither an acid nor a base.

4. Cite two or more experiments, already performed, which illustrate this method of salt formation.

**B.** *Acid and an Oxide.* Proceed as in **A,** using hydrochloric acid and a small piece of calcium oxide. Before evaporating to dryness filter the solution, if it is not clear. Test the final residue as in **A** and state the result.

**Required Exercises.** — As in **A** (except 4).

**C.** *Acid and a Salt.* (*a*) Proceed as in **A,** using hydrochloric acid and several small pieces of calcium carbonate. Test the final residue (as in **A**) obtained by evaporating the clear solution. State the result.

(*b*) Put a little sodium chloride in an evaporating dish, add 25 cc. of dilute sulphuric acid, stand the dish on a gauze-covered ring, and evaporate the solution to dryness in the hood. Toward the end of the evaporation, it may be necessary to remove the burner, turn down the flame, and heat very gently by moving the burner slowly back and forth beneath the dish. As soon as the danger of spattering is over, heat strongly as long as white choking fumes are evolved; this operation removes the last portions of sulphuric acid and completes the chemical change. Let the dish stand on the gauze until cool enough to handle. Then remove it, and loosen the solid with a glass rod or a knife. Test portions of the residue for sodium and a sulphate as follows: Proceed with the flame test for sodium as in **A** (*a*), and observe and state the result. Apply the usual test for a sulphate to a solution of the residue, and state the result.

**Required Exercises.** — 1. For (*a*), as in **A.**

2. For (*b*), as in **A** 1 and 3.

**D.** *Two Salts.* Add a little silver nitrate solution to a little calcium chloride solution, and describe the result.

**Required Exercises.** — As in **A** (except 4).

**E.** *Acid and Base.* Recall two or more experiments in which a salt was formed by the interaction of an acid and a base, and name all the compounds involved in the reactions. Write the equation for reaction in (*a*) the ordinary form and (*b*) the ionic form.

THIS PAGE IS LOCKED TO FREE MEMBERS
Purchase full membership to immediately unlock this page

HISTORY

Tens of thousands of important historical sources, many previously unobtainable, are now available for the first time with a Forgotten Books Full Membership.

Unlimited Access
$8.99/month

Continue

*Fair usage policy applies

liberation of carbonaceous volatile matter and moisture; then heat strongly and observe the immediate result; continue the heating until little or no black residue remains. Summarize the results.

(*c*) Determine the specific gravity of coal by the method given in Exp. **88** (*b*). State the result.

(*d*) If fossils from a coal bed are available, examine and describe them.

### Experiment 82 — Properties of Charcoal

MATERIALS. — Wood charcoal (lump and powder), animal charcoal, copper wire, crucible, vinegar, hydrogen sulphide solution, test tube fitted with a cork.

(*a*) Examine a typical specimen of wood charcoal and state its characteristic properties. Do the same with animal charcoal. Put a little animal charcoal in a crucible and heat it strongly. Meanwhile proceed with the wood charcoal. Wind the end of a nichrome test wire around a small piece of charcoal, hold it in the flame, and observe the result, especially the ease or difficulty of ignition, presence or absence of flame and of smoke, formation of ash. Compare the results with those obtained in Exp. **81** (*b*). When the animal charcoal has been heated thirty or more minutes, examine the residue. What is it?

(*b*) Fill a test tube one-fourth full of powdered animal charcoal as follows: Fold a narrow strip of smooth paper so that it will slip easily into the test tube; place the powder at one end of the troughlike holder, slowly push the paper into the test tube, holding both tube and paper in a horizontal position; now hold the tube upright, and the powder will slip from the paper. Add 10 cubic centimeters of hydrogen sulphide solution, and cork securely. If the tube leaks, make the opening gas-tight with vaseline. Shake thoroughly. After ten or fifteen minutes, remove the stopper and smell of the contents. Is the odor much less offensive? Repeat, unless a definite result is obtained. What property of animal charcoal is illustrated by this experiment?

(*c*) Fill a test tube one fourth full of powdered animal charcoal as in (*b*), add 10 cubic centimeters of vinegar, shake thoroughly for a minute, and then warm gently. Filter into a clean test tube. Compare the color of the filtrate with that of the original vinegar. Describe briefly. What property of animal charcoal is illustrated by this experiment?

## Experiment 83 — Preparation and Properties of Carbon Dioxide

MATERIALS. — Calcium carbonate, dilute hydrochloric acid, joss stick, candle fastened to a wire, calcium hydroxide solution, four bottles. The *apparatus* is shown in Fig. 133.

I. *Preparation.* Put six or more lumps of calcium carbonate into the bottle, and arrange the apparatus to collect

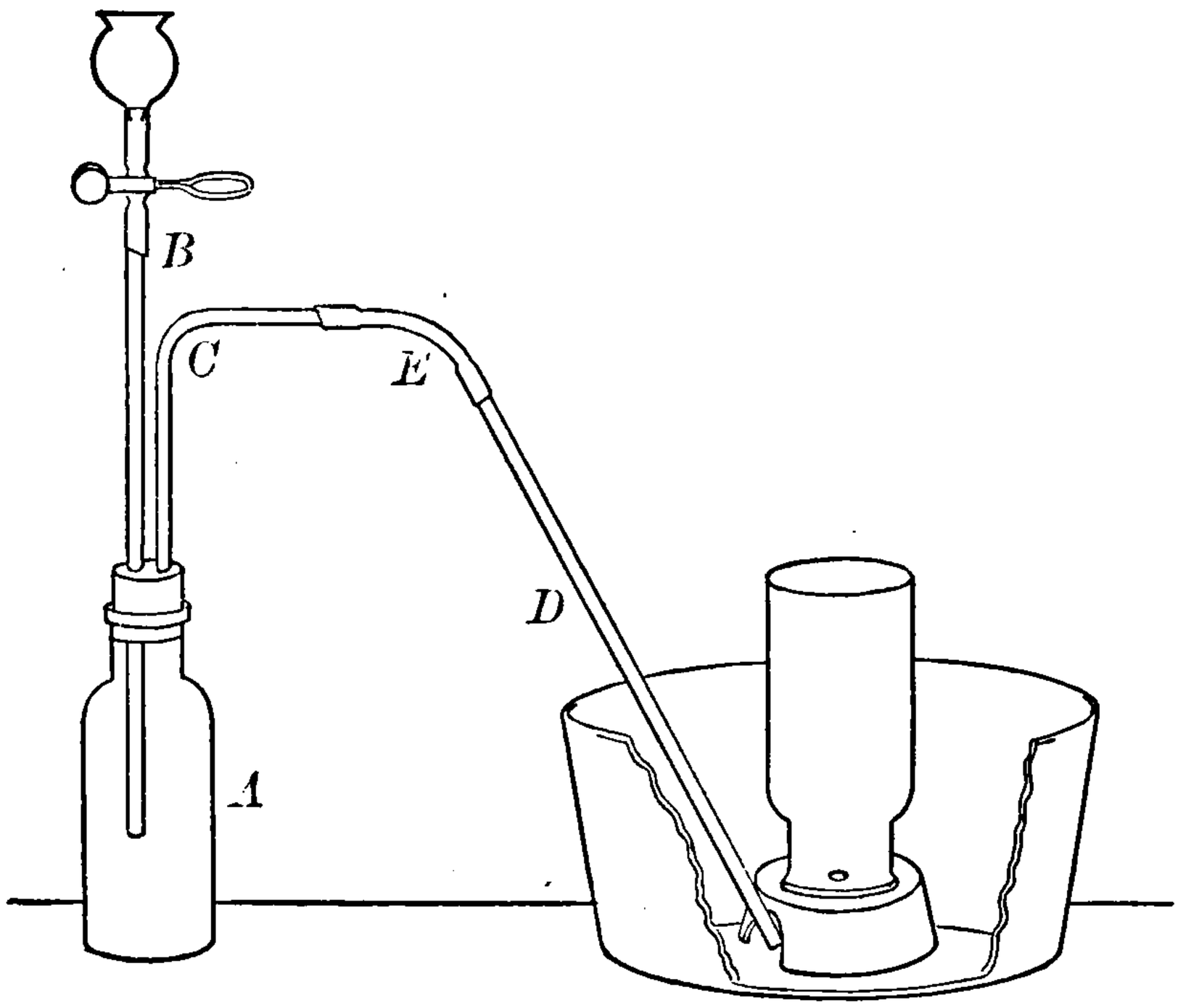


Fig. 133. — Apparatus for Preparing Carbon Dioxide.

the gas over water, as previously directed. Introduce enough dilute hydrochloric acid through the dropping tube to cover the calcium carbonate. Collect four bottles, cover with glass plates or filter paper, and stand aside till needed. Proceed at once with II.

II. *Properties.* (*a*) Plunge a blazing joss stick several times into a bottle. State the result.

(*b*) Lower a lighted candle into a bottle of air, and quickly invert a bottle of carbon dioxide over it, holding the bottles mouth to mouth. State the final result.

(*c*) Pour a little calcium hydroxide solution into a bottle of carbon dioxide, cover it with the hand, and shake it vigorously. Describe and explain the result.

(*d*) Fill a bottle of carbon dioxide one-third full of water, cover it tightly with the hand, and shake it vigorously. Invert the bottle, still covered, in the pneumatic trough. Observe and state the result.

NOTE. — As soon as (*d*) is performed wash the acid from the marble and save the solid for other experiments.

**Required Exercises.** — 1. Describe briefly the preparation of carbon dioxide.

2. What do (*a*) and (*b*) show about the relation of carbon dioxide to combustion?

3. What does (*b*) show about the relative weight of carbon dioxide and air?

4. What does (*d*) show about the solubility of carbon dioxide?

5. What is the test for carbon dioxide?

### Experiment 84 — Carbon Dioxide and Respiration

Exhale the breath through a glass tube into a test tube half full of calcium hydroxide solution. Describe and explain the result.

### Experiment 85 — Preparation and Properties of Acid Calcium Carbonate

MATERIALS. — Calcium hydroxide solution and the carbon dioxide generator used in Exp. **83**.

Pass carbon dioxide into a test tube half full of calcium hydroxide solution until the precipitate at first formed disappears. Filter, if the liquid is not perfectly clear. Heat the test tube gently and observe carefully all the changes. State the results of heating the clear solution.

**Required Exercises.** — 1. What is the name of the first precipitate?

2. Into what soluble compound was this precipitate formed by interaction with carbon dioxide?

THIS PAGE IS LOCKED TO FREE MEMBERS
Purchase full membership to immediately unlock this page

Get Smart

Over 2,000 years of human knowledge in 797,885 volumes

Instant access $8.99/month

Continue

*Fair usage policy applies

color, and luster. Rub a piece of graphite with the finger, and describe the feeling; draw a piece slowly across a sheet of paper, and state the result.

(*b*) If a compact lump of graphite is available, determine its specific gravity by the following method: Tie a thread around the solid, and weigh it on the scales to a decigram. Slip it carefully into a graduated cylinder (Fig. 134) previously filled with water to a known point and note the increase in the volume of water. This increase in volume is equal to the volume of the solid. Calculate the specific gravity by dividing the weight of the solid by the weight of an equal volume of water (assuming the weight of 1 cubic centimeter of water to be 1 gram). State the result.

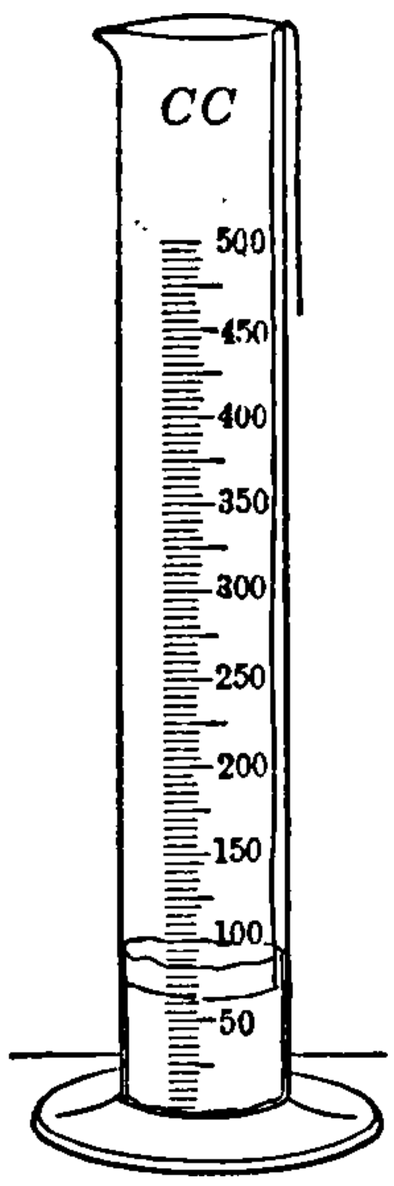


Fig. 134.—Apparatus for Finding the Specific Gravity of a Solid.

(*c*) Wind the end of a nichrome test wire (Fig. 103) around a small piece of graphite and hold the graphite in the hottest part of the flame for a minute or two; observe whether the graphite ignites readily. Continue the heating for five or more minutes and state the result.

(*d*) Examine available samples of graphite products, e.g. stove polish, plumbago crucibles, core of a lead pencil, electrodes, lubricants. Suggest a simple method of testing them for graphite; verify it by an experiment.

## Experiment 89 — Preparation of Carbon Dioxide by Different Methods

(*Each student need not perform all of this Experiment.*)

MATERIALS. — Charcoal, copper wire (30 centimeters long), candle, magnesium carbonate, sodium carbonate, sodium bicarbonate.

**A.** *Combustion of Carbon.* Wind one end of the copper wire around a small lump of charcoal, heat the charcoal in the flame, and lower it into a bottle. Let it remain for several minutes. Remove it, and test the gas in the bottle for carbon dioxide. State the result.

**B.** *Carbonaceous Substances.* Attach the candle to the copper wire, light the candle, and lower it into a bottle. Let it burn a minute or two, then remove it, and test as in **A.** State the result. Allow a

piece of wood and of paper to burn in separate bottles, and test as in **A.** State the results.

**C.** *Carbonates and Acids.* Put a little magnesium carbonate into a test tube, add dilute hydrochloric acid, and test for carbon dioxide by lowering into the escaping gas a tube which has been dipped into barium hydroxide solution. Observe and state the change in the drop of barium hydroxide solution. Repeat, using sodium carbonate and dilute sulphuric acid; also sodium bicarbonate and dilute sulphuric acid. State the results.

**D.** *Heating Carbonates.* Heat a little sodium bicarbonate in a test tube, and test for carbon dioxide as in **C.**

## Experiment 90 — Carbonic Acid

MATERIALS. — Solutions of sodium hydroxide and phenol-phthalein, bottle, and a carbon dioxide generator.

Construct and arrange the carbon dioxide generator as in Exp. **83.** Fill a bottle half full of water, add a few drops of a solution of phenol-phthalein and just enough sodium hydroxide solution to color the liquid a faint pink. Allow a *slow* current of carbon dioxide to bubble through the liquid in the bottle, until a definite change is produced in the absorbing liquid. Describe and explain it.

## Experiment 91 — Preparation and Properties of Carbon Monoxide

MATERIALS. — Oxalic acid, concentrated sulphuric acid, calcium hydroxide solution, pneumatic trough filled as usual, three bottles, three glass plates. The *apparatus* is shown in Fig. 135.

**Precaution.** Carbon monoxide and oxalic acid are poisonous. Hot sulphuric acid is dangerous. Perform this experiment with unusual care.

I. *Preparation.* Put 10 grams of oxalic acid in the flask *A*, and add 25 cubic centimeters of concentrated sulphuric acid. Put enough calcium hydroxide solution in *B* to cover the end of the tube *E*. The end of *H* should rest on the bottom of the pneumatic trough just beneath the hole in the support. Heat the flask *A* gently, and carbon monoxide will be evolved. A small flame must be used, because the gas is rapidly evolved as the heat is increased. It is advisable to remove or lower the flame as bubbles appear in the tube *B*, — regulate the heat by the effervescence. Collect all the gas, but do *not*

use the first bottle, covering the bottles with glass plates as they are filled, and setting them aside temporarily. When the last bottle has been collected and covered, loosen the stopper in *B*, remove the end of *H* from the water in the trough, and if gas is still being evolved, stand the generating apparatus in the hood. Proceed at once with II.

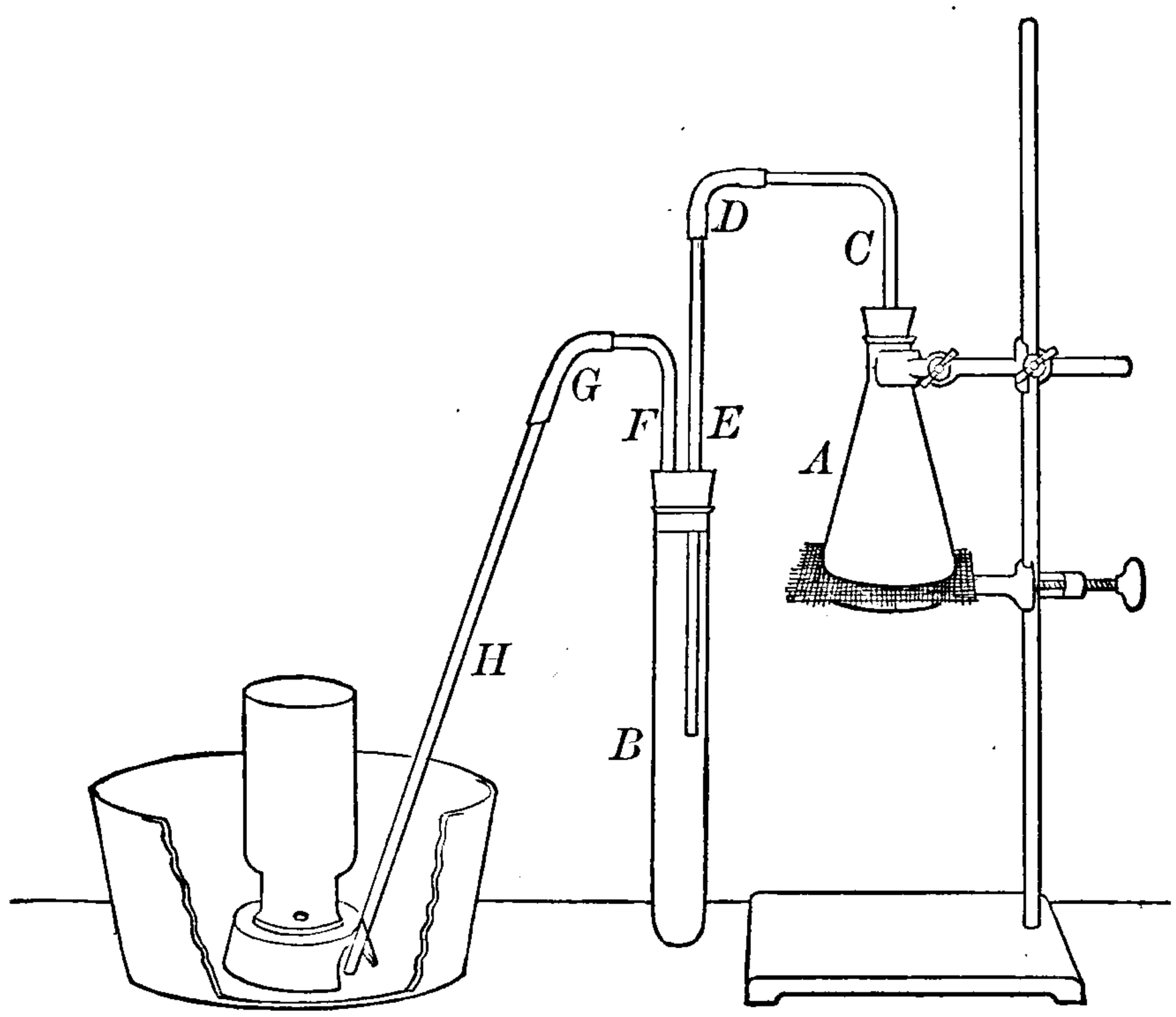


Fig. 135. — Apparatus for Preparing Carbon Monoxide.

II. *Properties.* Test the gas thus: (*a*) Notice that it is colorless.

(*b*) Hold a lighted match at the mouth of a bottle for an instant. Note the flame, especially its color. After the flame has disappeared, drop a lighted match into the bottle. Describe the result. Draw a conclusion and verify it by (*c*).

(*c*) Burn another bottle of gas, and after the flame has disappeared pour calcium hydroxide into the bottle and shake. Explain the result.

**Required Exercises.** — 1. Describe briefly the preparation of carbon monoxide.

2. Summarize the observed properties of carbon monoxide.

3. What gas besides carbon monoxide was produced?

## Experiment 92 — The Principle of the Davy Safety Lamp

(*a*) Press a wire gauze down upon a Bunsen flame. Where is the flame? Remove the gauze, let it cool (or use another gauze),

THIS PAGE IS LOCKED TO FREE MEMBERS
Purchase full membership to immediately unlock this page

HISTORY

Tens of thousands of important historical sources, many previously unobtainable, are now available for the first time with a Forgotten Books Full Membership.

Unlimited Access
$8.99/month

Continue

*Fair usage policy applies

### Experiment 94 — Preparation and Properties of Illuminating (Coal) Gas

MATERIALS. — Soft coal, litmus paper, filter paper, lead nitrate solution.

Arrange an apparatus like the *A–B* part shown in Fig. 108. Fill the large test tube *A* two-thirds full of coarsely powdered soft coal, insert the stopper with its delivery tube *B*, and clamp the test tube carefully to the iron stand as shown in Fig. 108. Heat the whole tube gently at first, and gradually increase the heat, but avoid heating either end very hot.

(*a*) As soon as the gas begins to escape, hold at the end of the tube *B* a piece of filter paper which has been moistened with lead nitrate solution; observe the effect upon the paper. The discoloration is caused by lead sulphide which is produced by the interaction of lead nitrate and the sulphides in the liberated gas.

(*b*) Lay a piece of moistened red litmus paper on the end of the tube *B* and continue to heat strongly. Observe any change in the litmus paper. To what compounds in the gas is the change due?

(*c*) Heat strongly, and light the gas at the end of the tube *B*. Observe and describe the flame.

(*d*) Discontinue heating, let the apparatus cool somewhat, disconnect, and break open the test tube. Examine the contents. State the properties of both solid and liquid products; what is the name of each?

### Experiment 95 — Candle Flame

MATERIALS. — Candle, two blocks of wood, bottle, piece of stiff white paper, calcium hydroxide solution, matches, a lead pencil, copper wire (15 centimeters or 6 inches long).

Attach a candle to a block of wood by means of a little melted candle wax, and proceed as follows:

(*a*) Hold a cold, dry bottle over the lighted candle. Describe the result produced inside the bottle. What is the product? What is its source? Remove the bottle, pour a little calcium hydroxide solution into it, and shake. Describe and explain the result. What are the two main products of a burning candle?

(*b*) Blow out the candle flame, and immediately hold a lighted match in the escaping smoke. Does the candle relight? Why? What is the general nature of this smoke? How is it related to the candle wax? How does (*b*) contribute to the explanation of (*a*)?

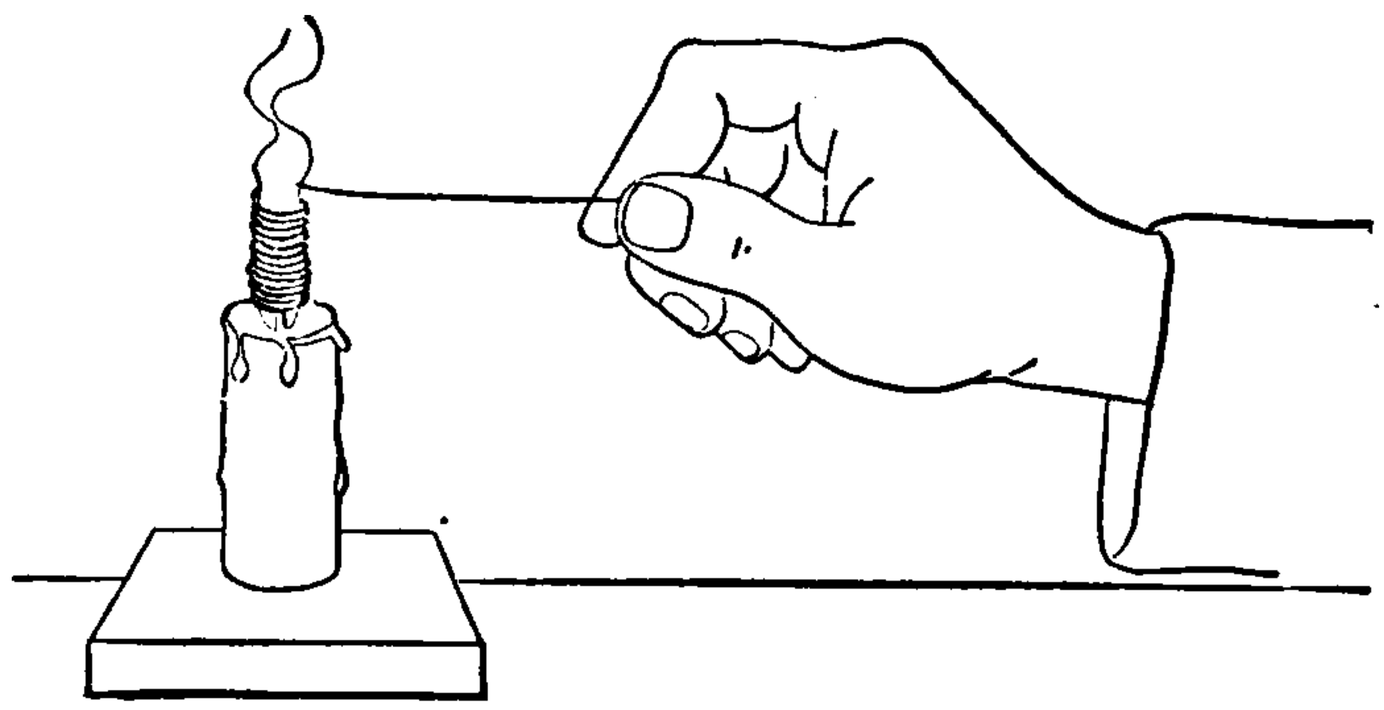

Fig. 136. — Effect of Cooling a Candle Flame.

(*c*) Press a piece of stiff white paper for an instant down upon the candle flame almost to the wick. Repeat several times with different parts of the paper. What does the paper show about the structure of the flame?

(*d*) Roll one end of the copper wire around a lead pencil to form a spiral about (2 centimeters or 1 inch) long. Press the spiral down slowly upon the candle flame (Fig. 136). Repeat after cooling the wire. What is the result? Why?

**Optional Exercises.** — 1. Draw a candle flame, showing the parts.

2. What is the essential difference between a candle flame and a Bunsen burner flame?

3. Is there any essential difference between a candle and a gas or a lamp flame?

4. Why do candles and lamps often smoke?

## Experiment 96 — Bunsen Burner and Bunsen Burner Flame

MATERIALS. — Bunsen burner, glass tube, powdered charcoal, pin copper wire.

**A.** *Bunsen Burner.* Take apart a Bunsen burner and study the construction. Write a short description of the burner. Sketch the essential parts.

**B.** *Bunsen Burner Flame.* (*a*) Close the holes at the bottom of a lighted burner and hold a glass tube in the upper part of the yellow flame. Note the black deposit. What is it? Where did it come from? Open the holes and move the blackened tube up and down in the colorless Bunsen flame. What becomes of the deposit?

(*b*) Dip a glass tube a short distance into some powdered wood charcoal, place the end containing the charcoal in one of the holes at the bottom of the lighted burner, and blow gently two or three times into the other end. Describe and explain the result.

(*c*) Open and close the holes of a lighted burner several times. Describe the result. Pinch the rubber tube to extinguish the flame, then light the gas at the holes. What change is produced in the flame? What is the object of the holes?

(*d*) Hold a match across the top of the tube of a lighted Bunsen burner. When the match begins to burn, remove and extinguish it. Note where it is charred, and explain the result. Press a piece of wire gauze down upon the flame. Describe the appearance of the gauze. The same fact may be shown by sticking a pin through a (sulphur) match, suspending it across the burner, and then lighting the gas. The position of the match is shown in Fig. 137. Turn on a full current of gas before lighting it. What does the whole of experiment (*d*) show about the structure of the lower part of the Bunsen flame? Verify your answer by (*e*).

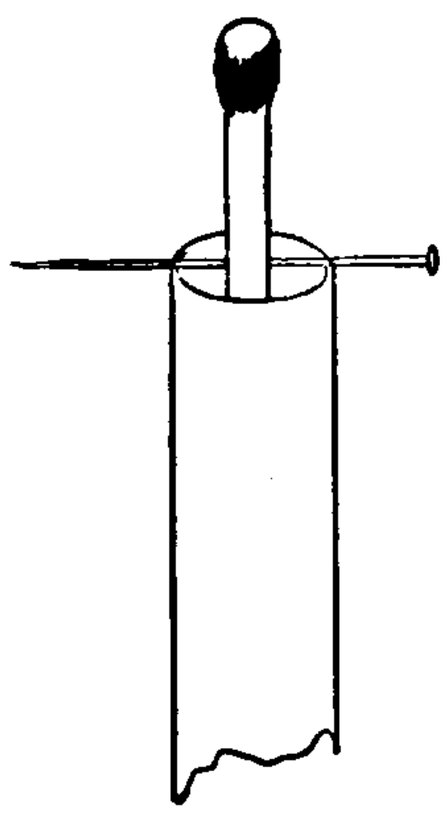

Fig. 137.—Sulphur Match Suspended Across the Top of a Bunsen Burner.

(*e*) Hold one end of a glass tube (about 15 centimeters or 6 inches long) in the Bunsen flame about 2 centimeters (1 inch) from the top of the burner tube. Hold a lighted match for an instant at the upper end of the tube; raise or lower the tube slightly (still keeping the end in the flame) and observe the result. What

THIS PAGE IS LOCKED TO FREE MEMBERS
Purchase full membership to immediately unlock this page

Get Smart

Over 2,000 years of human knowledge in 797,885 volumes

Instant access $8.99/month

Continue

*Fair usage policy applies

**A.** *Reduction.* (*a*) Make a shallow hole at one end of the flat side of a piece of charcoal. Fill the hole with a mixture of equal parts of powdered sodium carbonate and lead oxide, and heat the mixture in the reducing flame. In a short time bright, silvery globules will appear on the charcoal. Let the mass cool, and pick out the largest globules. Put one or two in a mortar, and strike with a pestle. Are they soft or hard? Malleable or brittle? How do the properties compare with those of metallic lead? What has become of the oxygen?

(*b*) Grind together in a mortar a little sodium sulphate and wood charcoal, adding at intervals just enough water to hold the mass together. Heat some of this paste in the reducing flame as in (*a*). Scrape the fused mass into a test tube, boil in a little water, and put a drop of the solution on a bright silver coin. If a dark brown stain is produced, it is evidence of the formation of silver sulphide. Repeat, if no such stain is produced. The silver sulphide is formed by the interaction of silver and sodium sulphide. Explain how the experiment illustrates reduction.

**B.** *Oxidation.* (*a*) Heat a small piece of zinc on charcoal in the oxidizing flame. Direct the flame so that most of the product will form a coating on the charcoal. What is the product? Observe the color of the coating on the charcoal when hot and cold. Record the result.

(*b*) Heat a piece of lead as in (*a*). Observe the color of the coating when hot and cold. Record the result.

(*c*) Heat a small piece of tin in the oxidizing flame. Observe and record as in (*b*).

**Optional Exercises.** — 1. Name the products formed in **B.**
2. Sketch a blowpipe.
3. Sketch a flame showing the oxidizing and reducing parts.

## Supplementary Experiments

### Experiment 98 — Combustion of Illuminating Gas

Materials. — Pointed glass tube, calcium hydroxide solution, bottle.

Remove the Bunsen burner from the rubber connection tube and replace it by a glass tube with a small opening. Light the gas, and

lower a small flame into a cold, dry bottle. Observe at once the most definite result inside the bottle. Remove and extinguish the flame, pour a little calcium hydroxide solution into the bottle, and shake. What are the two products of the combustion of illuminating gas?

### Experiment 99 — Properties of the By-Products of the Manufacture of Illuminating Gas

MATERIALS. — Tar, ammoniacal liquor, coke, gas carbon.

**A.** *Tar.* Examine a specimen of tar and state its characteristic properties.

**B.** *Ammoniacal Liquor.* (*a*) Proceed as in **A**, using ammoniacal liquor.

(*b*) Recall, perform, or repeat (if necessary) Exp. **53 C.**

**C.** *Coke and Gas Carbon.* (*a*) Proceed as in **A**, using coke and gas carbon.

(*b*) Proceed with coke and with gas carbon as in Exp. **88.**

(*c*) Compare with the results obtained in Exp. **88** (*c*).

### Experiment 100 — Testing Illuminating Gas

(*a*) Test samples of illuminating gas for carbon dioxide, sulphides (Exp. **94** (*a*) ), and ammonia. State the results.

(*b*) Suggest a test for carbon monoxide. Submit the details to the Teacher, before proceeding.

(*c*) Test illuminating gas for moisture.

### Experiment 101 — Testing Metals with the Blowpipe

Obtain "unknowns" from the Teacher and test as in Exp. **97 B.**

### Experiment 102 — Welsbach Burner, Mantle, and Flame

MATERIALS. — Welsbach burner and mantle.

Examine a Welsbach burner and compare its structure with that of the Bunsen burner. Connect the burner with the gas supply, light the gas, and compare the flame with the Bunsen burner flame. Are the burners and flames essentially different?

Examine a Welsbach mantle carefully. Suspend the mantle on the end of an iron wire (e.g. the handle of a deflagrating spoon), and hold the mantle in the Bunsen burner flame. State the result.

### Experiment 103 — Composition of Organic Compounds

MATERIALS. — Meat, gelatin, glue, leather, albumin, mustard, sugar.

**A.** *Carbon.* (*a*) Recall, perform, or repeat (if necessary) the experiment showing the distribution of carbon (Exp. **80**).

(*b*) Heat a very small piece of meat in a test tube and state the final result. (See also Exp. **104** (*d*) and **117 A.**)

**B.** *Nitrogen.* Proceed as in Exp. **117 B,** using various organic substances, e.g. gelatin, glue, meat, leather, peas, beans, nuts, leaves. State each result.

**C.** *Sulphur.* Proceed as in Exp. **117 C,** using various organic substances, e.g. albumin, mustard. State each result.

**D.** *Phosphorus.* Proceed as in Exp. **117 D,** using various organic substances, e.g. albumin, casein, seeds, cereals, nuts. State each result.

**E.** *Hydrogen and Oxygen.* Heat a little dry sugar in a test tube and notice the deposit of water in the upper part of the test tube.

### Experiment 104 — Properties of Sucrose (Cane Sugar)

MATERIAL. — Cane sugar.

(*a*) Examine different varieties of sucrose and state the characteristic properties.

(*b*) Put a little sucrose in the upper end of a test tube, hold the test tube in a horizontal position, and heat very gently by moving it back and forth above the flame. As soon as the sugar is melted, pour a little out upon a glass plate. Examine it later and describe the cooled mass. Add more sugar, heat as usual, and notice the change in color of the substance. Note the odor and also the deposit of water in the upper part of the test tube. Heat still further, and describe

THIS PAGE IS LOCKED TO FREE MEMBERS
Purchase full membership to immediately unlock this page

HISTORY

Tens of thousands of important historical sources, many previously unobtainable, are now available for the first time with a Forgotten Books Full Membership.

Unlimited Access
$8.99/month

Continue

*Fair usage policy applies

### Experiment 106 — Fehling's Test for Sugar

MATERIALS. — Copper sulphate, Rochelle salt, sodium hydroxide, and sugar solutions.

(*a*) Mix equal (and small) volumes of copper sulphate and Rochelle salt solutions in a test tube, and boil carefully; then add enough sodium hydroxide solution to make the mixture strongly alkaline.[1] Add a little glucose solution, and boil until a decided change is produced. The precipitate is cuprous oxide. Describe it.

(*b*) Repeat (*a*), using cane sugar solution instead of glucose. State the result.

### Experiment 107 — Testing for Glucose

MATERIALS. — Fehling's solution and the substances enumerated below.

Apply Fehling's test for glucose (and similar sugars) to cheap candy, maple sugar, molasses, table sirups, jelly, jam, etc. Prepare and use clear solutions. State the result in each case.

### Experiment 108 — Properties of Starch

MATERIALS. — Starch, microscope, Fehling's solution, iodine solution.

(*a*) Examine different kinds of starch with a microscope, if one is available. Describe them. If time permits, make drawings.

(*b*) Examine with a microscope thin slices of peas or beans which have been soaked about eight hours in water. Describe.

(*c*) Examine a thin slice of potato with a microscope. Describe.

(*d*) Prepare a starch mixture by boiling about 1 gram of powdered starch for a few minutes in a test tube containing

[1] This mixture, which is called Fehling's solution, may be prepared accurately as follows: Dissolve 34.64 gm. of crystallized copper sulphate in 500 cc. of water — solution No. 1; dissolve 180 gm. of Rochelle salt (sodium potassium tartrate) and 70 gm. of sodium hydroxide in 500 cc. of water — solution No. 2. Filter, if not clear. Mix the two solution (equal volumes) just before using.

50 cubic centimeters of water; stir or agitate the mixture during the boiling. Make three tests with the starch mixture (the third is (*e*) below). (1) Pour most of it into an evaporating dish which stands on a gauze-covered ring and boil, add 1 cubic centimeter of concentrated sulphuric acid, mix well, and boil for at least ten minutes; add water occasionally to replace that lost by evaporation. Meanwhile proceed with the second test. (2) Dilute the rest of the original starch mixture with water and test it with Fehling's solution. Observe and state the final result. As soon as the mixture in (1) has been boiled at least ten minutes, take out a little, add sodium hydroxide solution to alkaline reaction and apply Fehling's test. Note the result. Continue the heating for ten or more minutes, and test again. State the final result.

(*e*) Prepare a dilute iodine solution by dissolving a few crystals of iodine in 10 cubic centimeters of alcohol. Add a few drops of the iodine solution to a dilute, cold starch mixture. Observe the blue color. (This test for starch is delicate, and dilute mixtures should be used.)

## Experiment 109 — Properties of Alcohol

MATERIALS. — Alcohol, camphor, shellac, rosin, porcelain dish.

**A.** *Ethyl Alcohol.* (*a*) Determine cautiously the odor and taste of alcohol. Drop a little on a glass plate or on a piece of paper, and watch it evaporate. Is its rate of evaporation more rapid than that of water?

(*b*) Weigh a measured quantity (about 25 cubic centimeters) of alcohol and calculate its specific gravity.

(*c*) Alcohol dissolves many organic substances. Try camphor, powdered shellac, or rosin. Describe the result. Verify the solvent power of alcohol by adding water to the solutions. Describe the result.

(*d*) Burn a little alcohol in a dish and observe the nature of the flame. What are the products of combustion?

**B.** *Methyl Alcohol.* Repeat **A**, using methyl alcohol.

### Experiment 110 — Properties of Acetic Acid

Treat acetic acid as follows: (*a*) Taste (cautiously), and describe.

(*b*) Test with litmus paper, and describe the result.

(*c*) Warm a little in a test tube, and smell (cautiously). Describe the odor.

### Experiment 111 — Test for Acetic Acid and Acetates

Cautiously add a few drops of concentrated sulphuric acid to equal (and small) volumes of acetic acid and ethyl alcohol. Shake the mixture and warm gently. The pleasant, fruitlike odor is due to ethyl acetate.

NOTE. — This experiment is also a test for alcohol.

### Experiment 112 — Properties of Vinegar

(*a*) Show, experimentally, that a sample of vinegar contains acetic acid.

(*b*) Evaporate a little vinegar to dryness on a water bath and note the residue. Stand the dish on a gauze-covered ring and heat gently. Note the ash. Test the ash for (1) a carbonate and (2) potassium. Perform (2) by heating a little of the ash with a test wire; potassium compounds color the flame a delicate lilac.

### Experiment 113 — Testing Baking Powder

MATERIALS. — Baking powder, vinegar, sour milk, lemon juice, iodine solution, sodium hydroxide, ammonium oxalate solution, and the substances needed for **B, C, E, G.**

**A.** *Carbonates.* (*a*) Put a little baking powder in a test tube, add a few drops of dilute hydrochloric acid, and test the escaping gas with a tube which has been dipped into barium hydroxide solution. State the result.

(*b*) Put a little baking powder in a test tube, add 15 to 20 cubic centimeters of water, and shake well. Let the action continue a short time, and then test as in (*a*). State the result.

THIS PAGE IS LOCKED TO FREE MEMBERS
Purchase full membership to immediately unlock this page

Get Smart

Over 2,000 years of human knowledge in 797,885 volumes

Instant access $8.99/month

Continue

*Fair usage policy applies

acid (to remove the carbon dioxide), add ammonium hydroxide to alkaline reaction, filter if not clear, and then ammonium oxalate solution. If calcium compounds are present, a white precipitate (calcium oxalate) will be formed.

### Experiment 114 — General Properties of Fats

MATERIALS. — Fats, liquids as in (*c*).

(*a*) Examine several kinds of fat, e.g. lard, tallow, butter, and note the consistency, color, odor, taste, and any other characteristic property.

(*b*) Put a small quantity of fat on a piece of filter paper, drop a little alcohol or ether on another part of the same paper, and compare the results after a few minutes.

(*c*) Are fats soluble in water, alcohol, ether, gasoline, and carbon tetrachloride? Try the effect of one or more of these liquids (e.g. gasoline) separately on several fats. State the result.

(*d*) Test rancid fat for acid by shaking the fat with a little alcohol and then adding a few drops of neutral litmus or phenol-phthalein solution (or a piece of sensitive litmus paper) to the solution. State the result.

### Experiment 115 — Preparation of Soap

MATERIALS. — Sodium hydroxide, lard, salt; for **C** potassium hydroxide, alcohol, cotton-seed oil.

Prepare soap by one of the following methods: **A.** Dissolve 10 grams of sodium hydroxide in 75 cubic centimeters of water, add 30 grams of lard, and boil the mixture in a metal dish for an hour or more; add water occasionally to replace that lost by evaporation. Then add 20 grams of fine salt in small portions. Stir constantly during the addition of the salt. Let the mass cool, and then remove the soap, which will form in a cake at the surface.

**B.** Dissolve 13 to 15 grams of sodium hydroxide in 100 cubic centimeters of water, add 100 cubic centimeters of castor oil,

and boil for about half an hour. Add 20 grams of salt, and then proceed as in **A.**

**C.** Dissolve 1 gram of potassium hydroxide in 10 cubic centimeters of alcohol, add a little lard or cotton-seed oil, and stir constantly while the mixture is being heated cautiously to sirupy consistency. Allow the solution to cool. The jelly-like product is soap.

### Experiment 116 — Properties of Soap

MATERIALS. — Soap, sulphuric acid, calcium sulphate, magnesium sulphate, and acid calcium carbonate solutions.

Test as below the soap prepared in Exp. **115** (or another sample, if desired).

(*a*) Leave soap shavings exposed to the air for several days. What does the result show about the presence of water in the soap?

(*b*) Test soap solution with litmus paper. State the result. Put a few drops of phenol-phthalein solution on dry soap. State the result. This is a test for "free alkali."

(*c*) Add considerable dilute sulphuric acid to a soap solution. The precipitate is a mixture mainly of palmitic and stearic acids. Describe it.

(*d*) To a little soap solution in separate test tubes add calcium sulphate and magnesium sulphate solutions. Describe the result. Boil for a few minutes and describe the result. Prepare a solution of acid calcium carbonate by passing carbon dioxide into limewater until the precipitate is redissolved (see Exp. **85**). Add some of the solution to a soap solution, and describe the result. Boil, as above, and describe the result.

### Experiment 117 — Composition of Proteins

MATERIALS. — Albumin, soda-lime, sodium hydroxide solution, lead acetate solution, sodium carbonate, potassium nitrate, ammonium molybdate solution.

**A.** *Carbon.* Put a few small pieces of dry egg albumin in a test tube. Heat gently at first and finally increase the heat.

Notice the characteristic odor of the burning albumin. Notice also the change in color.

**B.** *Nitrogen.* Put a small amount of dry egg albumin in a test tube and add five times its bulk of soda-lime. Mix by shaking. Heat gently and test the escaping vapors with moist red litmus paper. Explain the result.

**C.** *Sulphur.* Put a small quantity of dry egg albumin in a test tube. Add 5 to 10 cc. of dilute sodium hydroxide solution and a few drops of lead acetate solution. Boil the mixture a few moments and notice the change in color. The black (or brown) compound is lead sulphide.

**D.** *Sulphur and Phosphorus.* Put a small quantity of dry egg albumin in a porcelain dish and add about five times its bulk of fusion mixture, i.e. equal quantities of powdered sodium carbonate and potassium nitrate. Stand the dish on a gauze-covered ring attached to an iron stand. Heat cautiously at first and finally increase the heat sufficiently to produce mild deflagration. Continue the heat until the mixture becomes nearly colorless. Let the dish cool. Meanwhile boil some water in a test tube and dissolve the residue in the boiling water. Filter the solution if it is not clear, and divide into two parts. To one part add concentrated hydrochloric acid drop by drop, boil until effervescence ceases, and then add barium chloride solution. What is the white precipitate? Explain its formation. To the other portion add concentrated nitric acid drop by drop, boil until effervescence ceases, and then add a little ammonium molybdate solution. Warm slightly. A yellow precipitate of ammonium phospho-molybdate should be formed.

## Experiment 118 — Tests for Proteins

MATERIALS. — Albumin and the specified solutions.

**A.** *Color Reactions.* (*a*) Prepare a dilute solution of egg albumin. To about 5 cc. add an equal volume of sodium hydroxide solution. Then add drop by drop a *dilute* copper sulphate solution. A violet color is produced.

THIS PAGE IS LOCKED TO FREE MEMBERS
Purchase full membership to immediately unlock this page

HISTORY

Tens of thousands of important historical sources, many previously unobtainable, are now available for the first time with a Forgotten Books Full Membership.

Unlimited Access
$8.99/month

Continue

*Fair usage policy applies

**B.** *Carbohydrate and Protein.* Put a little flour on a small piece of cheese cloth and tie the cloth into a bag. Put the closed bag in an evaporating dish half full of water and move the bag about in the water, squeezing it occasionally. Finally, remove the bag and wash it thoroughly in running water. Apply tests for starch and protein to (1) the solid left in the bag and (2) the solid that settles in the dish. State each result.

**C.** *Water and Mineral Matter.* Proceed as in Exp. **119 B,** and **C.** State each result.

**D.** Devise an experiment to show that carbon dioxide is formed during bread making. Before proceeding, submit the details to the Teacher. (Suggestion. — See Exp. **127** I.)

## Supplementary Experiments

### Experiment 121 — Preparation of Invert Sugar (Dextrose and Levulose) from Sucrose

MATERIALS. — Cane sugar, Fehling's solution.

Add a few drops of concentrated hydrochloric acid to about 25 cubic centimeters of cane sugar solution and boil several minutes. Neutralize with sodium hydroxide solution and test with Fehling's solution. State the result.

### Experiment 122 — Testing for Sugar in Vegetables and Fruits

MATERIALS. — Fehling's solution and the substances enumerated below.

Apply Fehling's test to a clear solution obtained from each of the following: Apple, banana, orange, carrot, turnip, raisins, and other available vegetables and fruits. Prepare the solution by cutting or grinding the substance into very small pieces, or adding a little water, and squeezing the soft mass in a piece of cheese cloth. State the result in each case.

### Experiment 123 — Detection of Starch by Iodine

MATERIALS. — Dilute solution of iodine, mortar and pestle, potato, rice, bread.

(*a*) Test potato, rice, and bread for starch by grinding a little of each separately with water in a mortar, and then adding a few

drops of the extract to a very dilute solution of iodine. State the result in each case.

(*b*) Proceed with the testing as in (*a*), using substances not positively known to contain starch, such as baking powder, leaves of different kinds of trees, roots of vegetables, popped corn, straw. State the result.

## Experiment 124 — Conversion of Starch into Sugar by an Enzyme

MATERIALS. — Cracker or bread, Fehling's solution.

(*a*) Grind a small piece of cracker or bread in a mortar with a little water, and test the mixture with Fehling's solution. State the result.

(*b*) Chew a piece of cracker or bread for a minute or two, add a little water, and test the clear solution with Fehling's solution. Compare with the result in (*a*).

## Experiment 125 — Properties of Dextrin

MATERIALS. — Dextrin, tannin, Fehling's solution, toasted bread.

(*a*) Examine dextrin and state its characteristic properties. Taste a little and compare its sweetness with that of sucrose and dextrose.

(*b*) Dissolve dextrin in a little water and note the properties of the solution. Apply some of the solution to one side of a piece of paper, fold over the coated side, press together, and examine after a short time. State the final result. Dilute the rest of the solution and use in (*c*) and (*d*).

(*c*) Add tannin to part of the dextrin solution from (*b*). Observe and state the result.

(*d*) Apply Fehling's test to dextrin solution. State the result.

(*e*) Soak toasted bread in water, filter, and test the filtrate for dextrin (as in (*c*) and (*d*) ).

## Experiment 126 — Properties of Guncotton, Collodion, and Celluloid

MATERIALS. — Guncotton, cotton, collodion, celluloid.

(*a*) Examine guncotton and state its obvious properties. Rub it between the fingers and compare the feeling with that produced by ordinary cotton. Burn a little guncotton and ordinary cotton, and compare the results.

(*b*) Pour or brush a little collodion solution on a glass plate. As soon as the solvent has evaporated, examine and describe the resulting film of collodion. Ignite a small piece of the film, and observe and state the result.

(*c*) Examine celluloid and state its characteristic properties, especially the odor. Set fire to a small piece, and observe and state the result.

## Experiment 127 — Preparation and Properties of Ethyl Alcohol

MATERIALS. — Grape sugar, yeast, calcium hydroxide solution, animal charcoal, sodium hydroxide. The *apparatus* consists of a large bottle provided with a one-hole stopper fitted with a delivery tube which reaches to the bottom of a small bottle.

I. *Preparation.* Put 500 cubic centimeters of water in the bottle, add 60 grams of grape sugar, and shake until dissolved. Break a fresh yeast cake into small pieces, grind it to a paste with a little water, and add it to the sugar solution. Fill the small bottle half full of calcium hydroxide solution, and carefully cover this solution with a little kerosene. Stand the apparatus where the temperature is 25° to 30° C.

Fermentation begins at once, and carbon dioxide — one of the products — bubbles through the calcium hydroxide solution, which is protected from the action of carbon dioxide in the air by the kerosene. The operation should be allowed to continue three or four days. The alcohol must be separated by distillation.

II. *Properties.* The distillation is performed with the apparatus used in Exp. **26**. Fill the flask half full of the liquid from I, add a few pieces of pipestem (or granulated zinc, or glass tubing) to prevent "bumping," and distil about 50 cubic centimeters. Save the distillate. Replace the residue in the flask by more liquid from I, distil again, and repeat this operation until all the liquid has been used. Replace the one-hole stopper with a two-hole stopper, insert the bent tube into one hole and a thermometer into the other so that the bulb just touches the surface of the combined distillates, which should now be distilled. Heat gently, and collect in a separate receiver the distillate which is formed when the temperature reaches about 95° C. This distillate contains most of the alcohol. Test as follows: (*a*) Note the odor.

THIS PAGE IS LOCKED TO FREE MEMBERS
Purchase full membership to immediately unlock this page

Get Smart

Over 2,000 years of human knowledge in 797,885 volumes

Instant access $8.99/month

Continue

*Fair usage policy applies

# SULPHUR — SULPHUR COMPOUNDS

## Experiment 130 — Physical Properties of Sulphur

(*If desired*, (c) *may be omitted and performed later as Exp.* **132**.)

MATERIALS. — Sulphur, graduated cylinder.

(*a*) Examine specimens of brimstone and flowers of sulphur, and state the characteristic properties of each.

(*b*) Determine the specific gravity of sulphur by the method given in Exp. **88** (*b*).

(*c*) Fill a test tube one fourth full of small lumps of sulphur and heat carefully until all the sulphur is melted. Observe the color and consistency of the melted sulphur. Increase the heat, and observe as before. Continue to heat until the sulphur boils and then observe as before. Let the test tube cool, and save it for Exp. **132**. Summarize the observations made when sulphur was heated.

NOTE. — If the test tube should break during the heating, extinguish the burning sulphur with sand.

## Experiment 131 — Preparation of Crystallized Sulphur

MATERIALS. — Sulphur (roll), carbon disulphide, evaporating dish.

**A.** *Monoclinic.* Fix a folded filter paper firmly in a funnel, and place the funnel in a test tube which stands in a rack. Fill another test tube two-thirds full of roll sulphur, heat it at first throughout its length, next gradually increase the heat until all the sulphur is melted, and then quickly pour it upon the filter paper. Let it cool until crystals appear just below the surface, and then pour out the remaining melted sulphur. Remove the paper and adhering sulphur, and cut, or break, open the cone of crystallized sulphur. Observe and record the properties of the crystals, especially the shape, size, color, luster, brittleness, and any other characteristic property.

Allow the best crystals to remain undisturbed for a day or two; then examine again, and record any marked changes.

**B.** *Orthorhombic.* Put about 3 grams of powdered roll sulphur in a test tube and add about 10 cubic centimeters of carbon disulphide — remember to keep the carbon disulphide away from flames. Shake until most of the sulphur is dissolved, then filter the solution (or pour the clear liquid) into an evaporating dish to crystallize. It is advisable, and often absolutely necessary, to stand the dish in the hood or out of doors, where there is no flame and where the offensive vapor will be quickly removed. Allow the liquid to evaporate; watch the crystallization toward the end, if convenient, and when the liquid has evaporated almost entirely, remove and dry the best crystals. Examine them as in **A** and record their properties.

### Experiment 132 — Preparation of Amorphous Sulphur

MATERIALS. — Sulphur, test tube, evaporating dish.

Put a few pieces of roll sulphur in a test tube (see Exp. **132** (*c*)), heat carefully until the sulphur boils, and then quickly pour the molten sulphur into a dish of cold water. This is the plastic variety of amorphous sulphur. Note its properties. Preserve, and examine it after twenty-four hours. Describe it, and compare its properties with those previously observed. Pulverize a small piece and test its solubility in carbon disulphide. State the result.

### Experiment 133 — Chemical Properties of Sulphur

MATERIALS. — Sulphur, deflagrating spoon, bottle, iron thread.

(*a*) Set fire to a little sulphur in a deflagrating spoon, and lower the spoon into a bottle. *Cautiously* waft the fumes toward the nose, and observe and describe the odor. What is the product of burning sulphur? What does its formation show about the combining power of sulphur?

(*b*) Fill a test tube one-fourth full of sulphur and press iron thread down upon the sulphur until the test tube is nearly

full. Heat the test tube strongly until the sulphur boils or there is marked evidence of chemical action. Remove the test tube from the flame as soon as the reaction begins. Observe and describe the result. What is the name of the product of the chemical change?

(*c*) Expose moist sulphur to the air for an hour or more. Shake with water, filter, and apply the test for a sulphate to the filtrate. State the result. What property of sulphur is illustrated by this experiment?

## Experiment 134 — Preparation and Properties of Sulphur Dioxide and Sulphurous Acid

MATERIALS. — Sodium sulphite, concentrated sulphuric acid, litmus paper, three bottles, two glass plates, joss stick, colored flower. The *apparatus* is shown in Fig. 140.

I. *Preparation.* (*a*) *Sulphur Dioxide.* Put about 10 grams of sodium sulphite in the flask, cover it with water, and insert the stopper with its tubes. Adjust the apparatus as shown in Fig. 140. Fill the cup with concentrated sulphuric acid, press the pinchcock a little, and let the acid flow *drop by drop* upon the sodium sulphite. Sulphur dioxide gas is evolved and passes into the bottle, which should be removed when full, as previously described. Moist blue litmus paper held for an instant at the mouth of the bottle will show (by change in color) when the latter is full. Collect two bottles of gas, cover each with a glass plate, and set aside until needed.

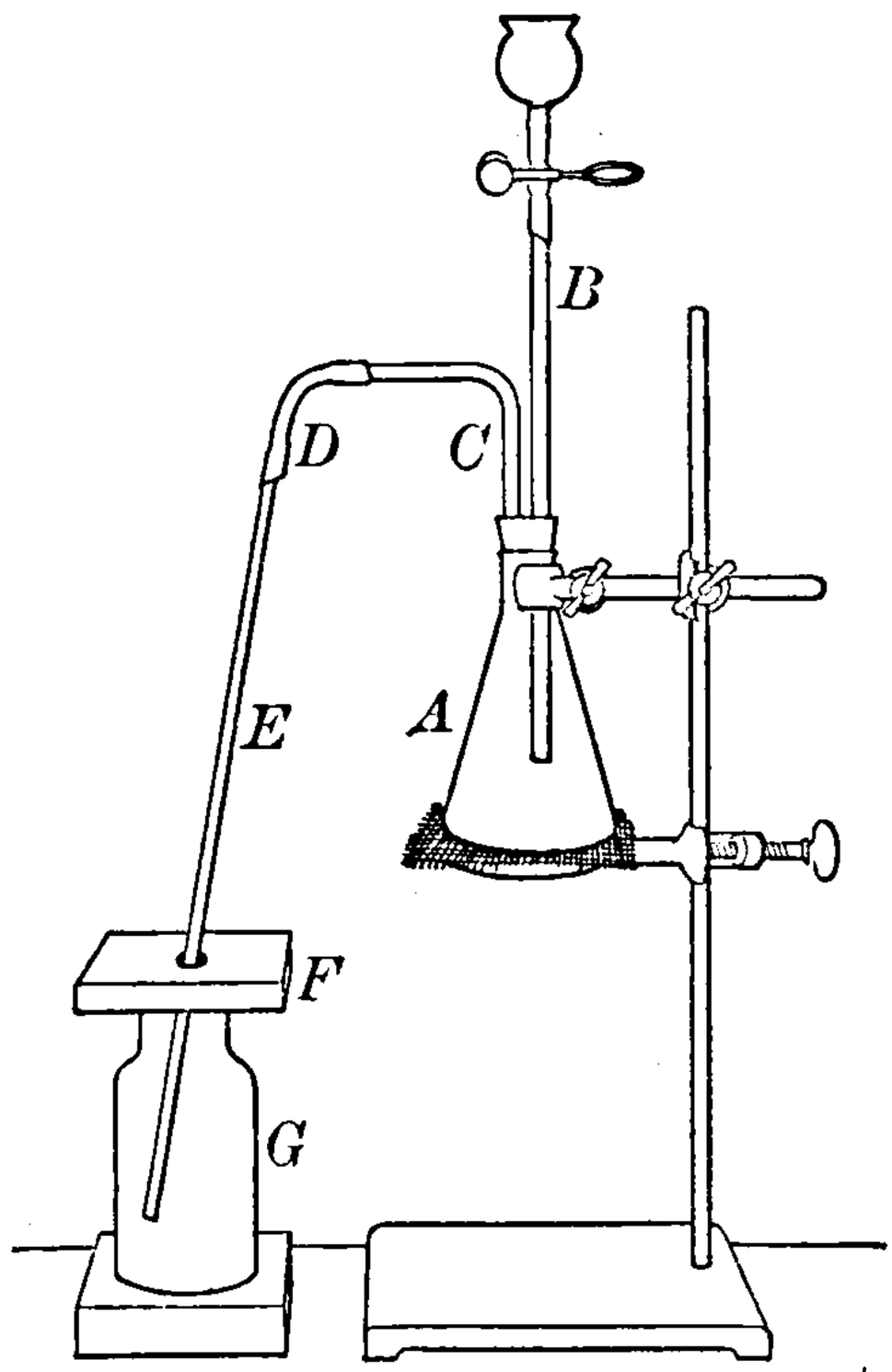

Fig. 140. — Apparatus for Preparing Sulphur Dioxide.

(*b*) *Sulphurous Acid.* As soon as the second bottle of gas has been removed and covered, put in its place a bottle one fourth full of water. Adjust its height (if necessary) by wooden

THIS PAGE IS LOCKED TO FREE MEMBERS
Purchase full membership to immediately unlock this page

HISTORY

Tens of thousands of important historical sources, many previously unobtainable, are now available for the first time with a Forgotten Books Full Membership.

Unlimited Access
$8.99/month

Continue

*Fair usage policy applies

and volume of the acid, calculate its specific gravity. Verify the result by reading the hydrometer which floats in a sample of the same acid. (This apparatus should be arranged for the class by the Teacher.)

(*b*) Add an equal volume of concentrated sulphuric acid to a test tube one-fourth full of water, and observe the change in temperature. Save the solution for (*c*) and (*d*).

(*c*) (1) Write some letters or figures with the sulphuric acid from (*b*) on a sheet of white paper, and move the paper back and forth over a low flame, taking care not to set fire to the paper. As the water evaporates the dilute acid becomes concentrated. Observe and describe the result. (Paper is largely a compound of carbon, hydrogen, and oxygen, and the hydrogen and oxygen are present in the proportion to form water.) Explain the general chemical change in this experiment. (2) Warm the acid in the test tube saved from (*b*), stand a stick of wood in the acid, and allow it to remain for fifteen minutes or more. Then remove the stick and wash off the acid. Describe and explain the change in the wood. (3) Proceed as in Exp. **104** (*d*).

(*d*) *Perform in hood.* Put a few drops of concentrated sulphuric acid in an evaporating dish, support the dish on a gauze-covered ring attached to an iron stand, and heat intensely. Observe and describe the result. Stop heating as soon as the result is obtained and let the dish cool before removing it.

### Experiment 136 — Tests for Sulphuric Acid, Sulphates, and $SO_4$-ions

MATERIALS. — Sulphuric acid, sodium sulphate, barium chloride solution, calcium sulphate, charcoal, powdered charcoal, blowpipe, silver coin.

**A.** *Sulphuric Acid.* Recall a test for concentrated sulphuric acid. How could the same test be utilized in the case of dilute sulphuric acid?

**B.** *Sulphuric Acid and Soluble Sulphates,* i.e. solutions

containing $SO_4$-ions. Add barium chloride solution to the solution of the acid or the sulphate, and boil with dilute hydrochloric acid. If no sulphur dioxide gas is liberated and an insoluble precipitate remains, then the original solution contained $SO_4$-ions. (See Exp. **134**.)

**C.** *Insoluble Sulphates.* Proceed as in Exp. **97 A** (*b*), using calcium sulphate (or any insoluble sulphate).

## Supplementary Experiments

### Experiment 137 — Sulphur Matches

(*a*) Examine a sulphur match. Do you detect any sulphur? Where?

(*b*) Light a sulphur match, and observe the entire action, as far as the sulphur is concerned. Describe it.

(*c*) What is the function of the sulphur in a burning match?

### Experiment 138 — Preparation and Properties of Hydrogen Sulphide

Materials. — Ferrous sulphide, dilute hydrochloric acid, three bottles, three glass plates, stoppered bottle, litmus paper. The *apparatus* is shown on Fig. 141.

**Precaution.** *Hydrogen sulphide is a poisonous gas and has an offensive odor. It should not be inhaled nor allowed to escape into the laboratory. Perform in the hood all experiments with hydrogen sulphide.*

I. *Preparation.* Construct and arrange an apparatus like that shown in Fig. 141. Fill the bottle *A* one fifth-full of coarsely powdered ferrous sulphide, insert the stopper tightly, and adjust the apparatus so that the end of the delivery tube will be under the support of the pneumatic trough. Introduce a little dilute hydrochloric acid through the dropping tube. Hydrogen sulphide gas is rapidly evolved. If the evolution of gas slackens or stops, add more hydrochloric acid. Collect three bottles, removing each as soon as full and covering with a glass plate. Set aside until needed. When all the bottles have been filled with gas, proceed at once with II.

II. *Properties.* Study as follows the hydrogen sulphide gas prepared in I: (*a*) Waft a very *little* of the gas cautiously toward the nose, and describe the odor. This odor is characteristic of hydrogen sulphide, and is a decisive test. Has the gas color?

(*b*) Test the gas from the same bottle with both kinds of moist litmus paper. Is hydrogen sulphide acid, alkaline, or neutral?

(*c*) Hold a lighted match to the mouth of the same bottle. Observe the color of the flame. Observe cautiously the odor of the prod-

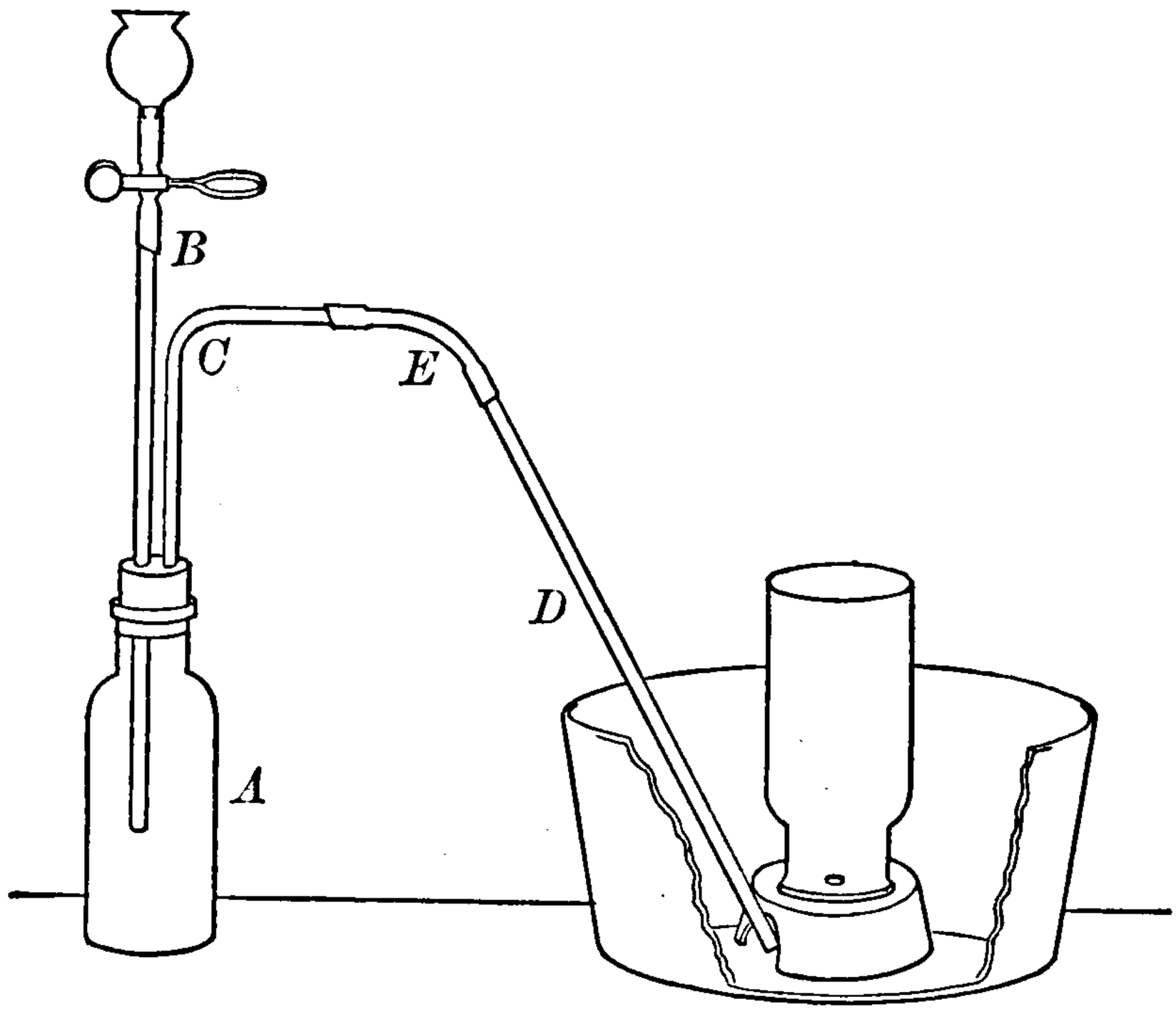


Fig. 141. — Apparatus for Preparing Hydrogen Sulphide.

uct of the burned gas; to what compound is the odor due? What, then, is *one* constituent of hydrogen sulphide?

(*d*) Burn another bottle of hydrogen sulphide and hold a cold bottle over the burning gas. What additional experimental evidence does this result give regarding the composition of hydrogen sulphide?

(*e*) Repeat any of the above with the remaining bottle of the gas.

**Required Exercises.** — 1. Summarize briefly the properties of hydrogen sulphide gas.

2. State the experimental evidence of its composition.

## Experiment 139 — Preparation and Properties of Sulphides

MATERIALS. — Hydrogen sulphide water, clean copper wire, clean sheet lead, bright silver coin, lead oxide (litharge); solutions of lead nitrate, arsenic trioxide (in hydrochloric acid), tartar emetic, zinc sulphate.

(*a*) Obtain a bottle half full of hydrogen sulphide water, and hold successively at the mouth, or in the neck, of the bottle (1) a clean copper wire, (2) a bright strip of lead, and (3) an untarnished silver

THIS PAGE IS LOCKED TO FREE MEMBERS
Purchase full membership to immediately unlock this page

Get Smart

Over 2,000 years of human knowledge in 797,885 volumes

Instant access $8.99/month

Continue

*Fair usage policy applies

### Experiment 142 — Preparation of Crystallized Borax

MATERIALS. — Borax, thread.

Prepare about 50 cubic centimeters of a hot, concentrated solution of borax. Pour the clear liquid into an evaporating dish, and let the solution cool. Crystals of borax will form; well-shaped crystals may be obtained by suspending a piece of thread in the solution and removing it with the adhering crystals before the water entirely evaporates. Remove and dry the crystals.

### Experiment 143 — Properties of Borax

MATERIALS. — Borax; crystallized borax for (*b*).

(*a*) Dissolve a little borax in water, drop a piece of red litmus paper into the solution, and let the whole stand about ten minutes. Observe and explain the result.

(*b*) Test borax crystals and borax powder for water of crystallization; and state the result. Expose to the air for an hour or more some of the borax crystals prepared in Exp. **142**.

(*c*) Apply the flame test to a little borax on the end of a clean test wire. What element is contained in borax according to this test?

(*d*) Dissolve a little borax in water, add a few cubic centimeters of ethyl alcohol and of concentrated sulphuric acid, and mix well. Test for boron by dipping a clean test wire into the solution and holding it in the outer part of the Bunsen flame. State the result.

### Experiment 144 — Tests with Borax Beads

(*Each pupil need not perform all of this Experiment.*)

MATERIALS. — Powdered borax, test wire, cobalt nitrate solution, copper sulphate solution, manganese sulphate solution.

Heat the looped end of the clean test wire and dip it into powdered borax. Heat the adhering borax in the flame,

rotating the wire slowly, until no further change occurs; continue to dip it into the borax and heat in the flame until a small, more or less transparent, bead is formed.

**A.** *Cobalt Compounds.* Moisten a borax bead with cobalt nitrate solution. Heat the bead in the oxidizing part of the Bunsen flame (Fig. 142); rotate the bead while heating it, otherwise it may drop off the wire. Observe the color of the cold bead. If it is black, melt a little more borax into the bead; if faintly colored, moisten again with the cobalt solution. The color is readily detected by looking at the bead against a white object in a strong light, or by examining it with a lens. When the color has been definitely determined, heat the bead in the reducing flame (Fig. 142). Compare

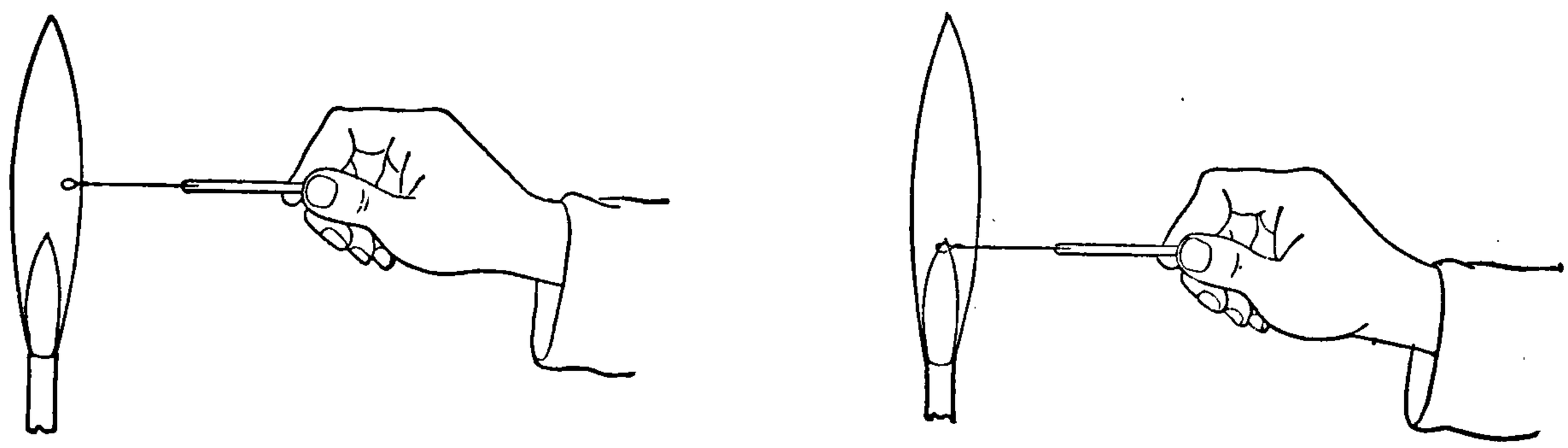

Fig. 142. — Heating a Borax Bead in the Oxidizing Flame (left) and the Reducing Flame (right).

the color of the cold bead with the previous observation. State the result. Remove the bead from the wire by dipping it, white hot, into water; the sudden cooling shatters the bead, which may then be easily rubbed or scraped from the wire.

**B.** *Copper Compounds.* Make another bead on a clean wire, moisten it with copper sulphate solution and heat it in the oxidizing flame; and then in the reducing flame. Compare the colors of the cold beads, and state the result.

**C.** *Manganese Compounds.* Make another bead on a clean wire, moisten it with manganese sulphate solution, and proceed as in **B.** Compare the colors of the cold beads, and state the result.

**D.** *Miscellaneous.* Obtain unknown solutions from the Teacher and test them with a borax bead.

## Supplementary Experiments

### Experiment 145 — Preparation and Properties of Boric Acid

Material. — Powdered borax.

I. *Preparation.* Heat about 25 cubic centimeters of water nearly to boiling in a large test tube, and slowly add about 10 grams of powdered borax; heat until the borax is dissolved. Pour about 5 cubic centimeters of concentrated hydrochloric acid slowly into the hot solution of borax, mix well by stirring, and then stand the test tube in the test-tube rack to cool, or cool it in a stream of water. Crystals of boric acid will separate from the solution. Filter (with a filter pump, if one is available), and wash the crystals while upon the filter paper with a little cold water. Redissolve a portion of the crystals in a very small quantity of boiling water, and let the solution cool slowly. Later examine the crystals for crystal form and luster.

II. *Properties.* (*a*) Examine a specimen, and state the properties, e.g. crystal form, color, luster, and the feeling when rubbed between the fingers.

(*b*) Dissolve a little in water, test the solution with litmus paper, and state the result.

(*c*) Proceed as in Exp. **143** (*d*), using boric acid instead of borax.

THIS PAGE IS LOCKED TO FREE MEMBERS
Purchase full membership to immediately unlock this page

HISTORY

Tens of thousands of important historical sources, many previously unobtainable, are now available for the first time with a Forgotten Books Full Membership.

Unlimited Access
$8.99/month

Continue

*Fair usage policy applies

acid, stirring constantly. The jellylike precipitate is silicic acid. Rub some between the fingers and state the result. Stand the dish on a gauze-covered ring attached to an iron stand and evaporate the solution to dryness in the hood. As the mass hardens, stir it with a glass rod. Toward the end, add more hydrochloric acid and evaporate to complete dryness. Then heat intensely for five minutes. The residue is silicon dioxide mixed with chlorides of sodium and potassium. When the dish is cool, add about 50 cubic centimeters of water, stir well, and filter; wash the residue once or twice, dry it, remove as much as possible from the paper, and heat it carefully in an evaporating dish for about five minutes. This residue is largely silicon dioxide. Rub some between the fingers or across a glass plate. Is any grit detected? Collect some within the loop of a test wire and heat it intensely in the flame for several minutes. State the result.

State the chemical changes that occur in changing sodium silicate into the final residue.

### Experiment 149 — The Cycle of Silicon Dioxide

MATERIALS. — Powdered silicon dioxide, sodium carbonate, test wire.

Grind about 1 gram of silicon dioxide to a very fine powder (or obtain the powdered substance from the Teacher). Heat about 8 grams of crystallized sodium carbonate in an evaporating dish until the water of crystallization has been driven off. Mix the silicon dioxide and anhydrous sodium carbonate thoroughly by grinding them together in a mortar. Heat the looped end of the test wire, dip it into the mixture and heat the substance in the flame, rotating the wire slowly as in the preparation of a borax bead; continue to dip the bead into the mixture and to heat intensely until a moderate sized bead is formed. Heat this bead until there is no further evidence of chemical action. While the bead is still soft, shake it from the wire into a mortar. Prepare five or six beads in the same way, and powder them. Transfer the powder to a test tube, add a little water, and boil; filter, if the solution is not clear. Add dilute hydrochloric acid, drop by drop, shaking constantly, until the solution is strongly acid. Evaporate this acid solution to dryness in the hood, and proceed from this point as in Exp. **148**.

State the chemical changes by which the silicon dioxide was transformed into the final substance.

## Experiment 150 — Testing for Silicon

MATERIALS.— Lead dish, powdered calcium fluoride, test wire, infusorial earth, pumice (powder), scouring soap, glass (small fragments), carborundum (powder).

Apply the test for silicon to the substances enumerated above, as in Exp. **147** (omitting the sand, of course). State the result in each case.

## Experiment 151 — Properties of Glass

MATERIALS. — Soft, hard, and flint glass.

(*a*) Examine specimens of soft, hard, and flint glass, and observe their characteristic properties.

(*b*) Heat soft glass and hard glass separately in the Bunsen flame, and observe and explain the result.

(*c*) Devise an experiment to show that flint glass contains lead, Before proceeding, submit the details to the Teacher.

(*d*) Determine the specific gravity of glass by the method given in Exp. **88** (*b*).

(*e*) Suggest a simple experiment to show that glass contains silicon.

(*f*) Grind some soft glass (carefully!) to a fine powder (or obtain some powdered glass from the Teacher), transfer it to a bottle, fill the bottle one fourth full of water, add a few drops of phenol-phthalein solution, cork the bottle tightly, and shake well. Examine after a few days. State and explain the result.

## Experiment 152 — Preparation and Properties of Hydrogen Fluoride

MATERIALS. — Lead dish, glass plate, paraffin, powdered calcium fluoride, concentrated sulphuric acid.

**Precaution.** *Do not inhale hydrogen fluoride. It is a corrosive poison. An aqueous solution of the gas — commercial hydrofluoric acid — burns the flesh frightfully. Perform this experiment with unusual care.*

Warm a glass plate about 10 centimeters (4 inches) square by dipping it into hot water or by moving it slowly above a flame. Coat one surface uniformly with a thin layer of paraffin wax. Scratch letters, figures, or a diagram through the wax with a pin or pointed glass rod. The wax should be removed through to the glass, and the lines should be rather coarse. Put about 5 grams of powdered calcium fluoride in a lead dish and add just enough concentrated sulphuric acid to form a thin paste. Stir the mixture with a match. Hold a piece of moist blue litmus paper in the escaping gas just above the surface of the mixture; state the result. Place the glass plate, wax side down, upon the lead dish and stand the whole apparatus in the hood for several hours, or until some convenient time. Remove the plate and scrape off the wax with a knife. The last portions can be removed by rubbing with a cloth moistened with alcohol or turpentine. Do not attempt to melt off the wax over the flame. If the experiment has been properly performed, the plate will be etched where the glass was exposed to the hydrogen fluoride gas. Write the equations for the essential chemical changes in this experiment.

NOTE. — The lead dish should be cleaned in the hood by scraping the contents carefully into a waste jar and washing the whole dish with water.

THIS PAGE IS LOCKED TO FREE MEMBERS
Purchase full membership to immediately unlock this page

Get Smart

Over 2,000 years of human knowledge in 797,885 volumes

Instant access $8.99/month

Continue

*Fair usage policy applies

### Experiment 154 — Preparation and Properties of Magnesium Bromide

MATERIALS. — Bromine water (saved from Exp. **153** or obtained from the Teacher), magnesium, chlorine water.

Shake the corked bottle of bromine water until most or all of the bromine is dissolved. Remove the cork carefully, add a little powdered magnesium, insert the cork, and shake well. Let the excess of magnesium settle, and observe the result. If the change is inconspicuous, add more magnesium, and shake. Pour the liquid into a test tube, and observe the appearance; compare it with the color of the original bromine water. Now add chlorine water drop by drop, shaking frequently, until a decided change in color takes place. To what is this color due? State the chemical changes that took place upon the addition of (*a*) magnesium and (*b*) chlorine water. Write the equations for these chemical changes.

### Experiment 155 — Tests for Bromine in Bromides

MATERIALS. — Potassium bromide, silver nitrate solution, carbon disulphide.

(*a*) Add a little concentrated sulphuric acid to a little potassium bromide in a test tube; warm slightly if the action is not marked. Observe the result, especially the color of the liquid or of the vapor just above the liquid. What element does it suggest?

(*b*) To a solution of a bromide, add a little silver nitrate solution, and shake. Observe the properties of the precipitate, especially the color and texture. Determine the solubility in ammonium hydroxide by warming a little of the precipitate in ammonium hydroxide. State the result. Compare the properties of silver bromide with those of silver chloride (Exp. **36**).

(*c*) To a solution of a bromide, add a little chlorine water and a few drops of carbon disulphide, and shake. The carbon disulphide will be colored yellow or brown by the liberated bromine.

### Experiment 156 — Preparation and Properties of Iodine

MATERIALS. — Potassium iodide, manganese dioxide, mortar and pestle, concentrated sulphuric acid, funnel, cotton.

I. *Preparation.* Grind together in a mortar about 10 gm. of potassium iodide and about twice this weight of manganese dioxide. Put the mixture in a test tube, moisten with water, and add a few cubic centimeters of concentrated sulphuric acid. Clamp the test tube vertically to an iron stand. Close up the inner end of the stem of the funnel with a small plug of cotton. Hold the funnel firmly over the mouth of the test tube, and heat the test tube gently. The vapor of the liberated iodine will fill the test tube, and crystals may collect in the upper part of the test tube and in the funnel. (If the crystals collect in the test tube, force them into the funnel by heating the test tube gently near the top.) Continue to heat until enough iodine for several experiments collects in the funnel. Scrape the crystals into a dish.

II. *Properties.* Study the properties of the iodine as follows: (*a*) Observe and record the physical properties, especially the color of the solid and of the vapor, and the odor (cautiously). Determine the volatility by putting a crystal or small piece in a bottle and exposing to the sunlight.

(*b*) Heat a crystal in a dry test tube, and invert the test tube when it is half full of vapor. What does the result show about the density of iodine vapor?

(*c*) Touch a crystal with the finger. What color is the stain? Will water remove it? Will alcohol? Will a solution of potassium iodide? What do these results show about the solubility of iodine?

NOTE. — If crystals are left, use them in the next experiment. Preserve the iodine in a stoppered bottle, if not used at once.

### Experiment 157 — Tests for Free Iodine

MATERIALS. — Iodine, potassium iodide, carbon disulphide, starch.

**Precaution.** *Carbon disulphide is inflammable. It should not be used near flames.*

(*a*) Add a few drops of carbon disulphide to a very dilute solution of iodine, which can be prepared by dissolving a crystal of iodine in potassium iodide solution. Shake well, and observe the color of the carbon disulphide.

(*b*) Grind a very small lump of starch in a mortar with a little water, pour the mixture slowly into about 15 cubic centimeters of hot water, and stir the hot liquid. Allow it to cool, or cool it by holding the vessel in a stream of cold water. Add a few cubic centimeters of the cold starch solution to a test tube nearly full of water, and then add a few drops of dilute iodine solution. Observe the result. (The starch should be colored blue; if the color is black, pour out half of the liquid and add more water.)

State briefly the two tests for free iodine.

### Experiment 158 — Tests for Iodine in Iodides

MATERIALS. — Potassium iodide, chlorine water, starch, carbon disulphide, silver nitrate solution.

(*a*) Add a few drops of carbon disulphide to a very dilute solution of potassium iodide. Now add several drops of chlorine water, and shake well. Observe and explain the result.

(*b*) Add a few cubic centimeters of cold starch solution to a very dilute solution of potassium iodide. Add a few drops of chlorine water, and shake well. Observe and explain the result.

(*c*) To a solution of an iodide, add a little silver nitrate solution, and shake. Observe the properties of the precipitate, especially the color and texture. Test the solubility of a little of the precipitate in ammonium hydroxide, and state the result. Compare the properties of silver iodide with those of silver chloride and silver bromide (see Exps. **36**, **155** (*b*)).

(*d*) Proceed as in Exp. **155** (*a*), using potassium iodide instead of potassium bromide.

THIS PAGE IS LOCKED TO FREE MEMBERS
Purchase full membership to immediately unlock this page

HISTORY

Tens of thousands of important historical sources, many previously unobtainable, are now available for the first time with a Forgotten Books Full Membership.

Unlimited Access
$8.99/month

Continue

*Fair usage policy applies

result. What is the name of the visible product? What is its formula? Compare the color with that observed in Exp. **159**.

(*b*) Put a few crystals of sodium ammonium orthophosphate (microcosmic salt) in a clean porcelain dish, stand the dish on a gauze-covered ring, and heat gently. While heating, hold a moistened piece of red litmus paper over the dish; also smell cautiously of the escaping substance. What gas is liberated? Increase the heat slowly and continue to heat until no further change seems to take place. Let the dish cool, and dissolve the residue in cold water. Test the solution with silver nitrate, and state the result. Into what compounds has the sodium ammonium phosphate been changed?

(*c*) To a little albumin solution, add a little metaphosphoric acid, and shake well. Observe and describe the result. (This test is not applicable to metaphosphates.)

## Experiment 161 — Preparation and Properties of Arsenic Trisulphide

MATERIALS. — Hydrogen sulphide water, solutions of arsenic trichloride, ammonium polysulphide, ammonium carbonate.

Add hydrogen sulphide water to a solution of an arsenic compound, such as arsenic trichloride. The precipitate is arsenic trisulphide. Describe it. Filter, or let the mixture stand until the precipitate settles, and then pour off the liquid. Divide the precipitate into two parts. Add considerable ammonium polysulphide solution to one part of the precipitate, and shake well. Observe and describe the result. Now add dilute hydrochloric acid carefully to acid reaction. Observe and describe the final result. To the other part of the original precipitate add considerable ammonium carbonate solution, and shake well. Observe and describe the result. Now add dilute hydrochloric acid solution slowly (to avoid loss by effervescence) to acid reaction. Observe and describe the final result. Summarize the properties of arsenic trisulphide.

### Experiment 162 — Properties of Antimony Trichloride

Pour a little antimony trichloride solution (prepared as in Exp. **166 B** or a similar one obtained from the Teacher) into a large volume of water. Observe the result. What compound of antimony is formed? Add concentrated hydrochloric acid drop by drop, shaking constantly. Observe and describe the result. What compound of antimony is finally formed?

### Experiment 163 — Preparation of Antimony Trisulphide

Add hydrogen sulphide water to the solution from Exp. **166 B** (or to a similar solution obtained from the Teacher). Observe the result. Compare the color of the precipitate with the corresponding arsenic compound.

## Supplementary Experiments

### Experiment 164 — Properties of Phosphorus (Optional)

**Precaution.** Phosphorus is a dangerous substance. The yellow variety is kept beneath water, and should be cut under water and handled only when wet. Dry yellow phosphorus ignites readily, and a burn caused by it heals very slowly. It is advisable to touch yellow phosphorus only with wet fingers; a safer plan is to grasp it firmly with wet forceps while it is being cut or transferred. Unusual care should be taken not to leave pieces of yellow phosphorus in dishes or deflagrating spoons after the experiments have been performed. Ask the Teacher for directions about the disposal of unused phosphorus.

**A.** *Yellow Phosphorus.* Fill a porcelain mortar half full of water, and ask the Teacher to put three small pieces of yellow phosphorus beneath the water. Stand the mortar where it will not be upset.

(*a*) Smell cautiously of the water in which the phosphorus has been placed. If no characteristic odor is detected, proceed with the other experiments, and observe the odor later. Describe it.

(*b*) Wet the forceps, transfer a piece of the phosphorus to an evaporating dish which has been slightly warmed by the hand or a low flame. Observe the result. Stand back as soon as the phosphorus begins to burn. Add a little cold water to the residue in the dish, test the solution with litmus paper (both colors), and state the result. What substance is in the solution?

(*c*) Fill a test tube half full of water, transfer a piece of the yellow phosphorus with wet forceps from the mortar to the test tube. Warm the test tube very gently and observe the ease with which phosphorus melts. As soon as the phosphorus melts, stand the test tube carefully in the test-tube rack and ascertain the temperature of the water by a thermometer. Record the temperature.

(NOTE. — Read the **Precaution** above.)

(*d*) Have ready a few crystals of iodine upon a piece of paper. Transfer the remaining piece of phosphorus from the mortar to an evaporating dish, dry it quickly by touching it with the end of a piece of tightly rolled filter paper, and then slip the iodine upon the dried phosphorus. Stand back and observe the result.

(*e*) Smell of the head of a phosphorus tipped match. Compare the odor with that observed in (*a*). Rub the head of a phosphorus tipped match in a dark place, and observe and describe the result.

**B.** *Red Phosphorus.* Obtain a little red phosphorus from the Teacher. (*a*) Examine the red phosphorus and observe its characteristic properties.

(*b*) Put a *very little* in a *clean* deflagrating spoon, and heat it cautiously in a Bunsen flame in the hood. Observe the result. Compare with the result observed in **A** (*b*). Proceed with the product as in **A** (*b*), and state the result.

## Experiment 165 — Properties of Antimony

MATERIALS. — Antimony, graduate, blowpipe, charcoal.

(*a*) Examine a specimen of antimony and state its characteristic properties, such as the color, luster, crystalline appearance, hardness, brittleness.

(*b*) Determine the specific gravity of antimony by the method described in Exp. **88** (*b*); use a 25 cubic centimeter graduate and small pieces of antimony. State the result.

(*c*) Heat a small piece of antimony on charcoal with the oxidizing blowpipe flame. Describe the result. What is the white product?

## Experiment 166 — Interaction of Antimony and Acids

**A.** *Nitric Acid.* Boil a little powdered antimony with concentrated nitric acid in the hood. Observe the effect on the antimony What compound of antimony is formed?

THIS PAGE IS LOCKED TO FREE MEMBERS
Purchase full membership to immediately unlock this page

Get Smart

Over 2,000 years of human knowledge in 797,885 volumes

Instant access $8.99/month

Continue

*Fair usage policy applies

# SODIUM — POTASSIUM — AMMONIUM COMPOUNDS

## Experiment 170 — Tests for Sodium

MATERIALS. — Sodium compounds, solutions of potassium hydroxide and tartar emetic.

(*a*) Recall the flame test, or apply it to several sodium compounds, using a clean test wire in each case.

(*b*) Make a solution of a sodium compound slightly alkaline with potassium hydroxide solution, and add a little freshly prepared tartar emetic solution. The white precipitate is acid sodium pyroantimonate ($H_2Na_2Sb_2O_7$).

## Experiment 171 — Properties of Sodium Chloride

MATERIALS. — Sodium chloride (several varieties) and the solution needed for (*e*).

(*a*) Examine several varieties of sodium chloride and state the characteristic properties of each.

(*b*) Prepare about 100 cubic centimeters of a nearly saturated sodium chloride solution. Filter, if it is not clear, and then proceed with the crystallization as in Exp. **20**. Examine and describe the best crystals.

(*c*) Heat a few crystals of sodium chloride in a test tube. State and explain the result.

(*d*) Put a little sodium chloride (e.g. table salt) in a test tube, and cork the test tube tightly. Put some of the original salt in an open dish. Place both vessels where they will not be disturbed for a day or two, and then compare the two specimens. State and explain the result.

(*e*) Apply the test for a chloride and a sulphate to separate portions of a solution of rock salt and of table salt. State and explain the results. (1) Test a specimen of reddish rock salt for iron as follows: Dissolve the salt in water, add a little dilute hydrochloric acid and boil, cool, and then

add ammonium hydroxide solution to alkaline reaction; the red-brown gelatinous precipitate is ferric hydroxide. (2) Test a specimen of salt for calcium by dissolving the solid in water and adding a little ammonium hydroxide and ammonium oxalate solution; the white precipitate is calcium oxalate. (3) Test a specimen of salt for magnesium as follows: Dissolve the solid in water, and add in succession ammonium chloride solution, ammonium hydroxide, and disodium phosphate solution; the white precipitate is ammonium magnesium phosphate.

### Experiment 172 — Properties of Sodium Hydroxide

(*a*) Perform, recall, or repeat (if necessary) experiments with sodium hydroxide which show the effect of (1) exposing it to the air, (2) adding acid to it, (3) dissolving it in water, (4) heating its solution with aluminium and with silicon.

(*b*) Heat a small piece of sodium hydroxide upon a piece of porcelain, and describe the result.

(*c*) Put a little pulverized sodium hydroxide in a dish and let it stand exposed to the air for a day or more. Describe the final product. Test it for a carbonate, and state the result.

(*d*) Fuse a small quantity of sodium hydroxide on a piece of porcelain, add a part of a match stick or a small piece of paper, and continue the fusion. State the effect on the wood and paper.

### Experiment 173 — Properties of Potassium

MATERIALS. — Potassium, litmus paper.

**Precaution.** Observe the same precaution as in using sodium. (See Exp. **12 D.**)

(*a*) Examine a very small piece of freshly cut potassium, and observe its most obvious physical properties.

(*b*) Drop a small piece of potassium on the water in an evaporating dish. Stand just near enough to see the action. Describe the action. Compare it with the action of sodium. Test the water with litmus paper, and state the result. What compound of potassium is in solution?

### Experiment 174 — Tests for Potassium

MATERIALS. — Potassium compounds, sodium cobaltinitrite solution.

(*a*) Apply the flame test to several potassium compounds, using a clean test wire in each test. State the result.

(*b*) Add several drops of sodium cobaltinitrite solution to a moderately concentrated solution of a potassium compound, and shake well. The yellow precipitate is potassium cobaltinitrite ($K_3Co(NO_2)_6$).

### Experiment 175 — Properties of Ammonium Chloride

MATERIAL. — Ammonium chloride.

(*a*) Examine a specimen of ammonium chloride and state its characteristic properties.

(*b*) Add a few grams of ammonium chloride to a test tube half full of water, shake well, and observe the result. Does ammonium chloride dissolve easily in water? How does the dissolving affect the temperature of the solvent? Save the solution for (*c*).

(*c*) Add a small piece of sodium hydroxide to the solution from (*b*), warm gently, and very cautiously observe the odor of the gaseous product. What is the gas? Explain its formation.

(*d*) Put a little ammonium chloride in a clean, dry test tube, heat the closed end gently, and observe the result. What is the white deposit? What general name is given to this process? To the product?

## SUPPLEMENTARY EXPERIMENTS

### Experiment 176 — Properties of Sodium

MATERIALS. — Sodium, litmus paper, tea lead.

**Precaution.** See Exp. **12 D.**

(*a*) Examine a small piece of sodium, and observe its most obvious physical properties, e.g. color, luster, whether hard or soft.

(*b*) Perform, recall, or repeat (if necessary) Exp. **12 D.** (Preparation of Hydrogen by the Interaction of Sodium and Water.)

THIS PAGE IS LOCKED TO FREE MEMBERS
Purchase full membership to immediately unlock this page

HISTORY

Tens of thousands of important historical sources, many previously unobtainable, are now available for the first time with a Forgotten Books Full Membership.

Unlimited Access
$8.99/month

Continue

*Fair usage policy applies

## Experiment 178 — Testing for Sodium and Potassium Carbonates

MATERIALS. — Washing soda, washing compounds, potash, lye.

Apply the test for a carbonate, potassium, and sodium to the substances enumerated above, and state the result in each case.

## Experiment 179 — Preparation and Properties of Potassium Nitrate

MATERIALS. — Sodium nitrate, potassium chloride, charcoal.

I. *Preparation.* Dissolve about 15 grams of potassium chloride in about 40 cubic centimeters of water, warming if necessary. Add about 17 grams of sodium nitrate, and stir well. Boil several minutes, or until a white solid separates. Let it stand until the solid settles somewhat, then pour the liquid (down a glass rod—see Int. **6** (1) (*a*) ) into an evaporating dish and let it cool. Pour off the liquid from the crystals. Dissolve the crystals in a small volume of hot water and let the solid crystallize again. Drain off the water and dry the crystals between filter paper.

II. *Properties.* (*a*) Prepare a solution of the final crystals and test portions for (1) potassium and (2) a nitrate. State the result.

(*b*) Test the solution also for (1) sodium and (2) a chloride. State the result. Explain it.

(*c*) Lay a piece of charcoal upon a block of wood or a brick and heat it by directing the flame upon it. Drop potassium nitrate cautiously upon the hot charcoal. State and explain the result.

## Experiment 180 — Properties of Ammonium Compounds

MATERIALS. — Ammonium compounds.

(*a*) Recall, perform, or repeat (if necessary) the experiment showing the effect of heating ammonium nitrate (see Exp. **56**).

(*b*) Test several ammonium salts as in Exp. **175** (*b*) and (*c*). State each result.

(*c*) Test baking powder for ammonium salts (see Exp. **113 F**).

(*d*) Expose a piece of ammonium carbonate to the air. Smell of it occasionally and state the result.

(*e*) Suggest an experimental method of preparing ammonium chloride or ammonium sulphate (see Exp. **53**). Before proceeding, submit the details to the Teacher.

# COPPER — SILVER — GOLD

## Experiment 181 — Properties of Copper

MATERIALS. — Copper, electric bell and battery.

**A.** *Physical.* (*a*) Examine several forms of copper — wire, sheet, filings, borings, etc. — and state the characteristic properties.

(*b*) Hold a piece of copper in the flame. Does it melt readily? Is copper a good conductor of heat? Insert a piece of copper wire in the circuit with an electric bell. Is copper a good conductor of electricity?

(*c*) Determine the specific gravity of copper (e.g. a compact roll of wire) by the method given in Exp. **88** (*b*). State the result.

**B.** *Chemical.* (*a*) Perform, recall, or repeat (if necessary) the experiments which show the effect of heating copper in air (see Exp. **4**).

(*b*) Perform, recall, or repeat (if necessary) experiments which show the action of copper with (1) dilute nitric acid and (2) concentrated sulphuric acid (see Exps. **54, 135**).

## Experiment 182 — Tests for Copper

MATERIALS. — Copper wire, copper sulphate solution, ammonium hydroxide, acetic acid, potassium ferrocyanide solution.

(*a*) Heat a copper wire in the Bunsen flame, and observe the color imparted to the flame. Heat a minute quantity of one or more copper compounds on a test wire in the flame, and observe the color. This color is characteristic of copper and its compounds.

(*b*) Add considerable ammonium hydroxide to copper sulphate solution, shake well, and observe the result. The formation of the blue solution is a characteristic and decisive test for copper.

(*c*) Add to a test tube one fourth full of water an equal volume of copper sulphate solution, and shake; then add a few drops of acetic acid and of potassium ferrocyanide solution. The brown precipitate is cupric ferrocyanide ($Cu_2Fe(CN)_6$).

(*d*) Add hydrogen sulphide water to copper sulphate solution. The black precipitate is cupric sulphide (CuS).

(*e*) Perform, recall, or repeat (if necessary) the borax bead test for copper.

### Experiment 183 — Properties of Copper Sulphate

MATERIALS. — Copper sulphate, alcohol.

(*a*) Examine a typical specimen of crystallized copper sulphate, and state its characteristic properties.

(*b*) Prepare anhydrous copper sulphate by heating a little of the pulverized salt in an evaporating dish. (1) Allow a little to remain exposed to the air for an hour or more. Describe and explain the change in the solid. (2) Add the rest of the anhydrous copper sulphate to a test tube half full of alcohol, and shake well. Describe and explain the change in the solid.

(*c*) Allow a piece of red and of blue litmus paper to remain in a solution of copper sulphate for fifteen minutes or more. State the result; explain it in terms of the theory of ionization. What term is applied to this kind of a chemical change?

(*d*) See Exps. **20**, **22**.

### Experiment 184 — Displacement of Metals — Copper

MATERIALS. — Copper wire, iron nail, zinc, copper sulphate solution, mercuric chloride solution (POISON).

(*a*) Put a clean copper wire in a test tube half full of mercuric chloride solution (POISON). After a short time remove the wire and wipe it with a soft cloth or paper. Observe and explain the change.

(*b*) Put a clean iron nail in a test tube half full of copper

THIS PAGE IS LOCKED TO FREE MEMBERS
Purchase full membership to immediately unlock this page

Get Smart

Over 2,000 years of human knowledge in 797,885 volumes

Instant access $8.99/month

Continue

*Fair usage policy applies

final result. What gold compound is formed? Save the contents of the test tube for Exp. **187**.

(*b*) Proceed as in **B** (*a*), using a mixture of a few cubic centimeters of concentrated nitric and hydrochloric acids instead of chlorine water. State the final result. What gold compound is formed? Save the contents of the test tube for Exp. **187**.

(*c*) *Perform this experiment cautiously.* Proceed as in **B** (*a*), using potassium cyanide solution (POISON) instead of chlorine water. Heat the mixture slightly. State the result. What gold compound is formed? Pour the solution into the waste jar *in the hood.*

### Experiment 187 — Test for Gold

MATERIALS. — Solutions from Exp. **186**, stannous chloride solution.

Heat (in the hood) one or both of the solutions from Exp. **186** until most of the chlorine has been driven off, dilute the final solution with water, and then slowly add dilute stannous chloride solution. A precipitate is produced, varying in color from faint purple to black according to the conditions. This precipitate is finely divided gold; its formation is a test for gold.

## SUPPLEMENTARY EXPERIMENTS

### Experiment 188 — Tests for Copper in Alloys

MATERIALS. — Brass, aluminium bronze, German silver, American cent, nickel, and dime.

(*a*) Prepare a solution of one of the alloys enumerated above by boiling a small piece in dilute nitric acid; it may be necessary to treat the alloy with several portions of acid in some cases. Filter the final liquid, if it is not clear. Apply the test for copper to the clear solution (see Exp. **182**). State the result in each case.

(*b*) Proceed as in (*a*) with one or more alloys obtained from the Teacher. State the result.

(*c*) Proceed as in (*a*) with metallic substances suspected to contain copper, e.g. pins and inexpensive jewelry.

### Experiment 189 — Preparation and Properties of Cuprous Oxide

Proceed as in Exp. **106**. Observe and state the properties of the precipitated cuprous oxide.

### Experiment 190 — Deposition of a Silver Film

Proceed as in Exp. **105**.

### Experiment 191 — Displacement of Metals — Silver

Proceed as in Exp. **184**, using silver nitrate solution and several metals. State the result in each case.

### Experiment 192 — Tarnishing and Cleaning Silver

MATERIALS. — Silver coin, sulphur, rubber band, mustard.

**A.** Perform one or more of the following: (*a*) Recall and state the effect of exposing silver to hydrogen sulphide gas.

(*b*) Place a small lump of sulphur upon a clean silver coin, wrap the whole tightly in several pieces of paper, and let the package stand undisturbed for several days. Examine the surface of the coin upon which the sulphur was placed. Describe and explain the result.

(*c*) Proceed as in (*b*), using a rubber band instead of sulphur. Describe and explain the result.

(*d*) Cover one side of a clean silver coin with a paste made of mustard and water. Let the covered coin stand undisturbed for an hour or more. Wash off the paste, and examine the coin. Describe and explain the result.

**B.** Dissolve a little sodium chloride and sodium bicarbonate in about 75 cubic centimeters of water and heat to boiling. Put a small piece of aluminium and a tarnished silver coin into the solution, taking care to have the metals in contact. Remove and examine the coin after a few minutes. State the result.

### Experiment 193 — Preparation and Properties of Silver Halides

MATERIALS. — Solutions of silver nitrate, potassium chloride, potassium bromide, potassium iodide, sodium thiosulphate.

To separate portions of silver nitrate solution add the chloride bromide, and iodide solution. Observe and state the color of each precipitate. Filter each separately.

Test precipitate separately by (*a*) exposing a little to the light, (*b*) shaking some with ammonium hydroxide, and (*c*) shaking some with sodium thiosulphate solution. State each result.

**Experiment 194 — Testing for Copper, Silver, and Gold**

(*a*) Test samples of inexpensive jewelry for these metals. Cut or file the sample into small pieces and heat with dilute nitric acid until the solid is dissolved or there is no further evidence of solution. Filter if not clear, and save the undissolved portion, if any, for (*c*).

(*b*) Evaporate the filtrate to a small volume, and dilute with water. Test this solution for silver by adding enough dilute hydrochloric acid for complete precipitation. Filter, and test the filtrate for copper by adding ammonium hydroxide to alkaline reaction. State the result of each test.

(*c*) Heat the undissolved residue from (*a*) with *aqua regia* and apply the test for gold to the properly prepared solution. State the result.

THIS PAGE IS LOCKED TO FREE MEMBERS
Purchase full membership to immediately unlock this page

HISTORY

Tens of thousands of important historical sources, many previously unobtainable, are now available for the first time with a Forgotten Books Full Membership.

Unlimited Access
$8.99/month

Continue

*Fair usage policy applies

### Experiment 196 — Tests for Calcium

MATERIALS. — Calcium compounds, ammonium oxalate and ammonium carbonate solutions.

(*a*) Subject several calcium compounds to the flame test, using a clean test wire in each case. What color is imparted to the flame?

(*b*) Add an excess of ammonium oxalate solution to calcium chloride solution, and state the result. The precipitate is calcium oxalate. Divide into two parts. To (1) add an excess of dilute hydrochloric acid, warm gently, and state the final result. To (2) add considerable acetic acid and warm gently; observe and state the final result.

(*c*) Add an excess of ammonium carbonate solution to calcium chloride solution, and state the result. The precipitate is calcium carbonate. Divide it into two parts, and treat with the acids as in (*b*). State the results and compare with the results obtained in (*b*).

(*d*) Suggest a test for calcium in calcium carbonate and calcium sulphate.

### Experiment 197 — Testing for Calcium

MATERIALS. — Mortar, plaster, bone ash, plaster of Paris, tooth powder, whiting, cement, bleaching powder.

(*a*) Prepare a solution of the substances enumerated above by boiling a little of each with dilute hydrochloric acid (or dilute nitric acid) and filtering. Test the filtrate for calcium. State the result in each case.

(*b*) Obtain "unknowns" from the Teacher and test them for calcium.

### Experiment 198 — Plaster of Paris

MATERIALS. — Plaster of Paris, block of wood, coin, vaseline.

Mix a little plaster of Paris with enough water on a block of wood to form a thick paste. Rub a very little vaseline upon one side of a coin, and press the coin, coated side down, into the paste. Let it stand undisturbed for fifteen or more minutes.

Then remove the coin carefully, and examine and describe the effect upon the hardened plaster.

### Experiment 199 — Calcium Compounds and Hardness of Water

(*a*) Proceed as in Exp. **116** (*d*), using only the calcium compounds.

(*b*) Prepare some permanently hard water and devise an experiment to soften it. Submit the details to the Teacher before proceeding.

### Experiment 200 — Tests for Strontium

MATERIALS. — Strontium compounds, test wire, calcium sulphate solution.

(*a*) Apply the flame test to strontium nitrate and other available strontium compounds, using a clean test wire in each case. What color is imparted to the flame? Compare this color with that produced by calcium compounds.

(*b*) To the solution of a strontium compound add calcium sulphate solution. The precipitate is strontium sulphate.

### Experiment 201 — Tests for Barium

MATERIALS. — Barium compounds, test wire, potassium dichromate solution.

(*a*) Apply the flame test to barium nitrate and other available barium compounds, using a clean test wire in each case. What color is imparted to the flame? Compare this color with that produced by calcium and by strontium compounds.

(*b*) Add dilute sulphuric acid to barium chloride solution (or the solution of any barium compound). The precipitate is barium sulphate. Describe it. Test its solubility by heating a little of the precipitate in (1) concentrated hydrochloric acid, (2) concentrated nitric acid, (3) concentrated sulphuric acid; perform the experiment in the hood and heat the acids cautiously, especially the sulphuric acid. State the results.

(*c*) Add potassium dichromate solution to barium nitrate

solution. The precipitate is barium chromate. Describe it. Test its solubility by heating some of the precipitate in (1) acetic acid and (2) concentrated hydrochloric acid. State the results.

## Supplementary Experiments

### Experiment 202 — Calcium Carbonate and Acid Calcium Carbonate

Perform, recall, or repeat (if necessary) the experiment in which gentle heat was applied to the product of the interaction of an excess of carbon dioxide and calcium hydroxide. (See Exp. **85**.) Express the essential chemical changes by reactions.

### Experiment 203 — Preparation and Properties of Calcium Oxide and Calcium Hydroxide

Materials. — Calcium carbonate, calcium oxide.

**A.** *Preparation.* (*a*) Wind a test wire around a small lump of calcium carbonate, and heat the solid for several minutes in the hottest part of the Bunsen flame; or heat the calcium carbonate on charcoal with the oxidizing flame of the blowpipe. Then let the residue cool somewhat, put it in an evaporating dish, and add a little water. Observe the result. Test the liquid with red litmus paper; test it also for calcium. State the results. What calcium compound was formed by heating the calcium carbonate? By treating the product of the heating with water?

(*b*) Prepare a small quantity of solid calcium hydroxide by adding a little water to a lump of lime, and save it for **C**.

**B.** *Properties of Calcium Oxide.* (*a*) Examine a lump of calcium oxide and state its characteristic properties.

(*b*) Put a lump of calcium oxide on a glass plate or block of wood and let it remain exposed to the air for a few days. Examine it at intervals and describe it. Describe the final product. What is it?

(*c*) Recall, perform, or repeat (if necessary) the experiment that shows the effect of mixing calcium oxide and water. Express the chemical reaction by an equation.

**C.** *Properties of Calcium Hydroxide.* (*a*) Examine the calcium hydroxide prepared in **A** (*b*) and state its characteristic properties.

THIS PAGE IS LOCKED TO FREE MEMBERS
Purchase full membership to immediately unlock this page

Get Smart

Over 2,000 years of human knowledge in 797,885 volumes

Instant access $8.99/month

Continue

*Fair usage policy applies

### Experiment 205 — Properties of Aluminium

**A.** *Physical.* Proceed as in Exp. **181 A** (*a*), (*b*), (*c*), using aluminium instead of copper.

**B.** *Chemical.* (*a*) Warm a piece of aluminium with concentrated hydrochloric acid. Test the escaping gas with a blazing joss stick; what is the gas? What compound of aluminium is formed?

(*b*) Boil a piece of aluminium with concentrated sodium hydroxide solution. Test as in **B** (*a*). What is the gas? What compound of aluminium is formed?

### Experiment 206 — Preparation and Properties of Aluminium Hydroxide

MATERIALS. — Solutions of aluminium sulphate, sodium hydroxide, potassium hydroxide, ammonium sulphide, and sodium carbonate.

**A.** *Preparation.* (*a*) Add ammonium hydroxide to a solution of aluminium sulphate, and shake well. The precipitate is aluminium hydroxide; save it for further use in this experiment.

(*b*) Proceed as in (*a*), using aluminium sulphate solution and a very little sodium hydroxide solution. Compare with the result in (*a*). Save this precipitate. Predict the result of using potassium hydroxide (instead of sodium hydroxide). Verify the prediction.

**B.** *Properties.* (*a*) Examine the precipitate from **A** (*a*) and note its properties, e.g. color, texture, etc. Remove a little and rub it between the fingers; describe the result.

(*b*) To the precipitate from **A** (*b*) add sodium hydroxide slowly and shake constantly until a conspicuous change occurs. State the result. What compound of aluminium is formed?

(*c*) To a portion of the precipitate from **A** (*a*) add considerable ammonium hydroxide, and shake well. Compare with the result in **B** (*b*).

(*d*) Add dilute hydrochloric acid to a portion of the precipitate from **A** (*a*), and shake well. State the result. Proceed similarly with other acids, e.g. sulphuric and acetic. State the results.

### Experiment 207 — Clarification of Water by Aluminium Hydroxide

MATERIALS. — Clay, aluminium sulphate solution.

Shake a little fine clay (or clay soil) in about 50 cubic centimeters of water. Divide the turbid water into two equal portions. Save one for comparison. To the other add a little aluminium sulphate solution and ammonium hydroxide, and mix well. Compare the two portions in a few minutes. State the final result. Explain it.

### Experiment 208 — Thermit

MATERIALS. — Thermit, sand (or clay) crucible about 10 centimeters (4 inches) deep, brick, sand, iron pan, granulated aluminium, barium peroxide, magnesium ribbon.

Fill an iron pan with sand and stand it on a brick. Put about 30 grams of thermit in the crucible, and bury the crucible about halfway in the sand; as a precaution, a box of sand should be near by to throw upon the molten iron in case the crucible should break. Prepare a fuse mixture by mixing thoroughly about 10 grams of barium peroxide and 1 gram of granulated aluminium. Make a hole in the top of the thermit and pour in the fuse mixture; insert a piece of magnesium ribbon into the heap of fuse mixture. Light the magnesium with the Bunsen flame, and stand away. The reaction is vigorous. Describe it. When the crucible is cool, break it open and examine the contents. Describe the two parts. What is the name of each?

### Experiment 209 — Tests for Aluminium

MATERIALS. — Aluminium sulphate, cobaltous nitrate solution, blowpipe, charcoal.

(*a*) Proceed as in Exp. **206 A** (*a*).

(*b*) To a portion of the solution of the aluminium compound add a little sodium hydroxide solution and then an excess. To another portion add an excess of ammonium hydroxide. The precipitation and properties of aluminium hydroxide serve as the test.

(*c*) Heat a little aluminium sulphate (or any other aluminium compound) on charcoal in the blowpipe flame. Cool, and moisten with a drop or two of cobaltous nitrate solution. Heat again, and observe the color of the residue.

## SUPPLEMENTARY EXPERIMENTS

### Experiment 210 — Aluminium Salts as Mordants

MATERIALS. — Solutions of alum and cochineal.

Add a little alum solution to a dilute solution of cochineal, then add ammonium hydroxide and shake well. Filter, and compare the colors of the filtrate and precipitate.

### Experiment 211 — Preparation and Properties of Potassium Alum

MATERIALS. — Aluminium sulphate, potassium sulphate, evaporating dish.

**A.** *Preparation.* Add 8 grams of aluminium sulphate and 4 grams of potassium sulphate to about 40 cubic centimeters of water and heat the mixture in a porcelain dish until the salt is dissolved. Set it aside to crystallize; well-formed crystals may be obtained upon a thread suspended in the solution. (Meanwhile proceed with **B** (*a*)). Crystals of potassium alum will be deposited. Remove the best ones; dry and examine. Describe them, giving color, luster, size, and crystal form.

**B.** *Properties.* (*a*) Test a solution of alum (from the laboratory bottle) for aluminium ions and sulphate ions, and state the result. Cautiously taste the solution, and describe the result. Test solid alum for water of crystallization, and state the result.

THIS PAGE IS LOCKED TO FREE MEMBERS
Purchase full membership to immediately unlock this page

HISTORY

Tens of thousands of important historical sources, many previously unobtainable, are now available for the first time with a Forgotten Books Full Membership.

Unlimited Access
$8.99/month

Continue

*Fair usage policy applies

# IRON

## Experiment 216 — Properties of Iron

MATERIALS. — Cast and wrought iron, steel, magnet, iron thread, iron powder.

**A.** *Physical.* (*a*) Examine typical specimens of cast iron, wrought iron, and steel, and state their characteristic physical properties.

(*b*) Determine the heat and the electrical conductivity of iron wire by proceeding as in Exp. **181** (*b*). Compare the result with that of similar experiments.

(*c*) Determine the specific gravity of iron by the method given in Exp. **88** (*b*). Compare as in (*b*).

(*d*) Try the action of a magnet on each kind of iron. State the result.

(*e*) Drop a pinch of iron powder into a Bunsen flame. Hold a piece of iron thread in the flame. Describe the results, and draw a conclusion.

**B.** *Chemical.* (*a*) Perform, recall, or repeat (if necessary) experiments which show the effect of heating iron in oxygen, chlorine, nitrogen, nitrous oxide, and sulphur. State each result.

(*b*) As in (*a*), experiments showing the action of acids with iron. State the results.

(*c*) As in (*a*) experiments illustrating the displacement of metals by iron. If necessary, try additional experiments with iron and solutions of metals. State the results. (Compare Exps. **184, 191, 212.**)

## Experiment 217 — Properties of Ferrous Compounds

MATERIALS. — Iron powder (or filings), hydrochloric acid, solutions of sodium hydroxide and potassium ferricyanide.

Put a few grams of iron powder in a test tube, add about 10 cubic centimeters of dilute hydrochloric acid, and warm

gently; ferrous chloride is formed (in solution). Proceed as follows: (1) Pour a little into a test tube one third full of sodium hydroxide solution. The precipitate is ferrous hydroxide. Describe it. Watch and describe the changes in color. To what are the changes due? (2) Add a second portion to potassium ferricyanide solution. The precipitate is ferrous ferricyanide. Describe it.

### Experiment 218 — Properties of Ferric Compounds

MATERIALS. — Solutions of ferric chloride, sodium hydroxide, potassium sulphocyanate, and potassium ferrocyanide.

To a little ferric chloride solution add (1) sodium hydroxide solution. The precipitate is ferric hydroxide. Describe it. Add to ferric chloride solution (2) a little potassium sulphocyanate solution. The rich wine-red color is caused by soluble ferric sulphocyanate. This test readily distinguishes ferric from ferrous compounds. Add as above (3) a little potassium ferrocyanide solution. The precipitate is ferric ferrocyanide. Describe it.

Tabulate the results of Exps. **217** and **218**, showing the behavior of ferrous and ferric compounds under the same conditions.

### Experiment 219 — Interrelation of Iron Compounds

MATERIALS. — Ferric chloride solution, zinc, ferrous sulphate, potassium chlorate.

**A.** Put a piece of zinc in ferric chloride solution made slightly acid by hydrochloric acid. After the operation has proceeded for about fifteen minutes, test a portion of the liquid for a ferrous and a ferric compound by Exps. **217** and **218**. State and explain the result.

**B.** (*a*) To a solution prepared from fresh or freshly washed ferrous sulphate add a little hydrochloric acid, warm gently, and then add a few crystals of potassium chlorate. After heating a short time, test portions of the solution for a ferric and a ferrous compound (as in **A**). State and explain the result.

(*b*) Add 10 cubic centimeters of concentrated nitric acid, drop by drop, to a hot solution of ferrous sulphate to which a little sulphuric acid has been added, and boil. Test and explain as in (*a*).

## Supplementary Experiments

### Experiment 220 — Testing Substances for Iron

Materials. — Clay, brick, flower pot, bauxite, rusty rock, sheet tin, iron rust, bluing, solutions of potassium ferricyanide and potassium sulphocyanate.

(*a*) Prepare a solution of each of the substances to be tested by boiling a little of the powdered material with concentrated hydrochloric acid. Test the clear solution for iron, both ferric and ferrous, and state the result in each case.

(*b*) Obtain other substances (from the Teacher) and test them for iron as in (*a*).

(*c*) Add considerable sodium hydroxide solution to a dilute solution of bluing. Describe and explain the result. (Suggestion. — See Exp. **218** (1).)

### Experiment 221 — Blue Print Paper

Materials. — Ferric ammonium citrate solution (2.2 gm. to 10 cc. of water), potassium ferricyanide solution (same concentration), cotton or sponge, smooth, hard paper.

Prepare, or obtain from the Teacher, the two solutions. Mix equal volumes of each. Dip a piece of absorbent cotton or a sponge into the mixture, squeeze out the excess, and apply a thin coat to one side of a piece of paper. Let the paper dry in a dark place.

Lay a key or a coin on the coated paper and expose to the sunlight for a few minutes. Wash the paper thoroughly with water. Compare it with (1) the original uncoated paper, (2) the coated unexposed paper, and (3) a piece of exposed and washed paper. State the result.

THIS PAGE IS LOCKED TO FREE MEMBERS
Purchase full membership to immediately unlock this page

Get Smart

Over 2,000 years of human knowledge in 797,885 volumes

Instant access $8.99/month

Continue

*Fair usage policy applies

### Experiment 224 — Tests for Magnesium

MATERIALS. — Solutions of magnesium sulphate (or chloride), ammonium chloride, ammonium hydroxide, disodium phosphate.

(*a*) To a solution of magnesium sulphate (or chloride) add successively solutions of ammonium chloride, ammonium hydroxide, and disodium phosphate. A precipitate of ammonium magnesium phosphate ($NH_4MgPO_4$) is formed. Describe it.

(*b*) Put a little powdered magnesium oxide in a cavity at the end of a piece of charcoal, moisten with water, and heat intensely in a blowpipe flame. Cool, and moisten with a drop of cobaltous nitrate solution. Heat again, and when cool observe the color. If the experiment has been conducted properly, a pink or pale flesh colored residue coats the charcoal.

### Experiment 225 — Tests for Zinc

MATERIALS. — Zinc, zinc sulphate and cobalt nitrate solutions, zinc oxide, blowpipe, charcoal.

(*a*) Apply tests for metallic zinc (see Exp. **181**, **A**).

(*b*) Add a very little sodium hydroxide solution to zinc sulphate solution, and shake well. Describe the precipitate. What is it? Divide the mixture into three parts. To one add considerable sodium hydroxide, to another add ammonium hydroxide, and to the third add dilute hydrochloric acid. Shake each well, and observe the result. What compound of zinc is formed in each case?

(*c*) Fill a small cavity at one end of a piece of charcoal with zinc oxide (or any other zinc compound), and heat intensely in the blowpipe flame. Moisten with a drop of cobaltous nitrate solution, then heat again. Cool and examine. State the color of the incrustation on the charcoal in or near the cavity. (Compare Exp. **209** (*c*).)

### Experiment 226 — Properties of Mercurous and Mercuric Compounds and Tests for Combined Mercury

MATERIALS. — Solutions of mercurous nitrate, mercuric chloride, and potassium iodide.

**A.** *Mercurous.* (*a*) Add a few drops of hydrochloric acid to a little mercurous nitrate solution. The precipitate is mercurous chloride. Describe it. Note its insolubility in water and in dilute hydrochloric acid. Add an excess of ammonium hydroxide. The black precipitate is a test for mercury in mercurous compounds.

(*b*) Add potassium iodide solution to mercurous nitrate solution. Describe the result. What compound of mercury is formed?

**B.** *Mercuric.* (*a*) Add a few drops of hydrochloric acid to a little mercuric nitrate solution. Compare with the result in **A** (*a*). Add a few drops of ammonium hydroxide, or enough to produce a decided change. Compare with **A** (*a*). The precipitate is mercuric ammonium chloride.

(*b*) Proceed as in **A** (*b*), using mercuric chloride solution.

**C.** See experiments showing displacement of metals in which mercury and its compounds are involved.

## SUPPLEMENTARY EXPERIMENTS

### Experiment 227 — Properties of Magnesium and Zinc

MATERIALS. — Magnesium, zinc.

**A.** *Physical.* Proceed as in Exp. **181 A**, using magnesium and zinc instead of copper.

**B.** *Chemical.* (*a*) Perform, recall, or repeat (if necessary) experiments showing the results of heating magnesium and zinc (1) in a limited supply of air and (2) in an abundance of air; and also treating magnesium and zinc with acids. State the results.

(*b*) Proceed as in Exp. **205 B**, using zinc instead of aluminium. What zinc compound is formed?

### Experiment 228 — Equivalent of Zinc and Magnesium

Proceed as in Exps. **61** and **62**.

### Experiment 229 — Physical Properties of Mercury

(*a*) Pour a drop or two of mercury into an evaporating dish. Examine the mercury, and state its characteristic properties. Agitate the dish, and describe the result.

(*b*) Stand a funnel in a test tube and carefully pour the mercury from the dish into the test tube. Remove the funnel. Heat the bottom of the test tube gently and observe the result, especially the deposit, if any, upon the upper part of the tube. Scrape a little of it out of the tube with a glass rod. What is the deposit? What property of mercury is shown by this experiment?

(*c*) Suggest a method of determining the specific gravity of mercury. If approved by the Teacher, try it.

### Experiment 230 — Displacement of Metals — Magnesium, Zinc, and Mercury

Proceed as in former experiments (e.g. Exp. **184**), using these metals and solutions of several metallic compounds. Tabulate the results.

### Experiment 231 — Test for Cadmium

MATERIALS. — Solutions of cadmium chloride and hydrogen sulphide.

Add hydrogen sulphide water to a test tube half full of cadmium chloride solution. The precipitate is cadmium sulphide. Describe it.

THIS PAGE IS LOCKED TO FREE MEMBERS
Purchase full membership to immediately unlock this page

HISTORY

Tens of thousands of important historical sources, many previously unobtainable, are now available for the first time with a Forgotten Books Full Membership.

Unlimited Access
$8.99/month

Continue

*Fair usage policy applies

(*b*) Bend a piece of tin and note the crackling noise.

(*c*) Rub a piece of lead upon a hard surface, e.g. the (outside) bottom of a mortar. State the result. Rub lead with the fingers, and compare with the preceding result.

### Experiment 235 — Displacement of Metals — Tin and Lead

Proceed as in former experiments (e.g. Exp. **184**), using tin and lead and solutions of metals. Tabulate the results and compare with similar experiments.

### Experiment 236 — Testing for Lead and Tin

MATERIALS. — As below.

**A.** *Lead.* (*a*) Warm thin shavings of solder with dilute nitric acid, filter and test the filtrate for lead.

(*b*) Proceed as in (*a*) using one or more of the following: Tea lead, type metal, plumbago, shot, bullets, metallic cap of a bottle, "lead" of a lead pencil, and "unknowns" obtained from the Teacher.

(*c*) Apply the (reduction) blowpipe test for lead to white lead, red lead, litharge, dry paint, chrome yellow, and "unknowns."

**B.** *Tin.* (*a*) Boil a piece of tin foil with concentrated hydrochloric acid, filter, and test the filtrate for tin.

(*b*) Proceed as in **B** (*a*) with metals known or suspected to contain tin.

### Experiment 237 — Analysis of Solder

MATERIALS. — Solder, ammonium polysulphide solution.

Dissolve a gram of solder filings in as small a quantity of hot *aqua regia* as possible, evaporate nearly to dryness (in the hood), dissolve the residue in water, add 10 to 15 cubic centimeters of dilute hydrochloric acid, and precipitate the metals as sulphides by bubbling hydrogen sulphide gas through the solution for 15 or 20 minutes. Filter, wash with hot water, pierce a hole in the filter paper, and wash the precipitate into a test tube with yellow ammonium sulphide. Add more ammonium sulphide, and shake. Filter.

The filtrate contains the tin as ammonium sulphostannate; add to it dilute hydrochloric acid, and yellow stannic sulphide is precipitated.

The precipitate is lead sulphide. Dissolve it in hot dilute nitric acid, filter, and test the filtrate for lead.

## Experiment 238 — Qualitative Analysis of a Solution of Lead, Silver, and Mercury (ous)

MATERIALS. — Solution containing lead nitrate, silver nitrate, and mercurous nitrate.

Add dilute hydrochloric acid drop by drop to the solution until precipitation eases. Allow the mixture of precipitated chlorides to settle, pour off the liquid carefully (see Int. § **6** (1)(*a*)), add about 15 cubic centimeters of water, and boil. Filter, and test the filtrate for lead. Wash the precipitate with hot water until the wash water does not give a test for lead. Pierce a hole in the point of the filter paper with a glass rod, and wash the mixed precipitates of silver and mercurous chlorides into a test tube with dilute ammonium hydroxide. Warm gently and shake. Filter, and test the filtrate for silver. The black residue is a sufficient test for mercury. Its presence may be confirmed thus: Dissolve the black precipitate in a *very* little *aqua regia*, dilute with water, and add a clean copper wire; remove the wire in a few minutes, wipe gently, and mercury will be seen on the wire as a bright silvery coating.

### Experiment 239 — Tests for Chromium

MATERIALS. — Borax, chrome alum, potassium carbonate, potassium nitrate, acetic acid, nitric acid, sodium hydroxide solution, lead nitrate solution, potassium dichromate solution, test wire, piece of porcelain, forceps.

(*a*) Apply the borax bead test to chrome alum.

(*b*) Mix equal small quantities of potassium carbonate, potassium nitrate, and powdered chrome alum, place the mixture on a piece of porcelain, hold it with the test tube holder in the Bunsen flame, and heat it until the mixture fuses. A yellow mass, due to the presence of potassium chromate, results. If the color is not decided, dissolve the mass in water, add acetic acid, slowly at first, and boil until all the carbon dioxide is expelled. Add a few drops of lead nitrate solution to a portion, and yellow lead chromate is precipitated. (If the precipitate is white, it is lead carbonate, and shows that not all the potassium carbonate was decomposed, as intended.)

(*c*) Proceed as in Exp. **233** (*e*), using potassium chromate or dichromate solution. State the result.

### Experiment 240 — Properties of Potassium Chromate and Dichromate

MATERIALS. — Potassium chromate and dichromate, concentrated hydrochloric acid, potassium hydroxide solution.

(*a*) Make a dilute solution of potassium chromate and dichromate, and compare the colors. Save for (*b*) and (*c*).

(*b*) Add a few drops of concentrated hydrochloric acid to the solution of potassium chromate prepared in (*a*), and observe the change in color. Describe it. Compare with the color of the potassium dichromate solution. Draw a conclusion.

THIS PAGE IS LOCKED TO FREE MEMBERS
Purchase full membership to immediately unlock this page

Get Smart

Over 2,000 years of human knowledge in 797,885 volumes

Instant access $8.99/month

Continue

*Fair usage policy applies

## Experiment 243 — Preparation and Properties of Chromic Hydroxide

MATERIALS. — Solutions of sodium hydroxide and chrome alum.

Add a little sodium hydroxide solution to a solution of chrome alum. The precipitate is chromic hydroxide. Describe it. Add an excess of sodium hydroxide solution, and shake. Describe the result. Boil, and state the result. (Compare with Exp. **206**.)

## Experiment 244 — Oxidation with Potassium Permanganate

MATERIALS. — Potassium permanganate, sulphuric acid, ferrous sulphate, filter paper.

(*a*) Add a few drops of sulphuric acid to a weak solution of ferrous sulphate; then add, drop by drop, a dilute solution of potassium permanganate. The potassium permanganate oxidizes the ferrous to ferric sulphate; its color is changed, owing to the loss of oxygen and transformation into other compounds.

(*b*) Boil a piece of filter paper in a dilute solution of potassium permanganate. Describe and explain the result.

# LABORATORY EQUIPMENT

The lists given below include the apparatus, chemicals, and supplies needed for the experiments in this book. Quantities and prices have been omitted in justice to teachers, dealers, and the author. The author, at his own suggestion, has lodged with the L. E. Knott Apparatus Co., 15 Harcourt Street, Boston, Mass., information regarding the quantities needed for classes of varying size. It is hoped that teachers who desire information will correspond with the dealer when preparing orders. The author takes this opportunity to say he has no financial connection with any dealer in scientific supplies.

## *List A — Individual Apparatus*

This list includes the apparatus constantly used, and each student should be provided with a set.

1 Blowpipe.
1 Blowpipe tube.
5 Bottles, wide mouth, 250 cc.
1 Bottle, generator, 250 cc.
1 ft. Copper wire, No. 20.
1 Bunsen burner.
1 Deflagrating spoon.
1 Erlenmeyer flask, 250 cc.
1 Evaporating dish, $2\frac{3}{4}$ in.
100 Filter papers, 4 in.
1 Forceps, iron.
1 Funnel, $2\frac{1}{2}$ in.
4 Glass plates, 4 x 4 in.
6 in. Glass rod.
5 ft. Glass tubing.[1]
1 Graduated cylinder, 25 cc.
1 Iron stand, clamp (medium), ring (3 in.).
1 Mortar and pestle, 3 in.
1 Pinch clamp (Mohr's).[4]
1 Pneumatic trought complete.[2]
1 Rubber stopper, one-hole.[3]
1 Rubber stopper, two-hole.[3]
2 ft. Rubber burner tubing, $\frac{1}{4}$ in.
6 in. Rubber connecting tubing, $\frac{3}{16}$ in.
6 in. Rubber pressure tubing, $\frac{3}{16}$ in.[4]
6 Test tubes, 6 x $\frac{3}{4}$ in.
3 Test tubes, 8 x 1 in.
1 Test tube brush.
1 Test tube holder.
1 Test tube rack.
1 Thistle tube.[4]
1 Wire gauze, iron, 4 x 4 in.

[1] To fit the rubber stoppers.

[2] Indurated fiber keeler No. 4 and shallow flower pot, 4 in.

[3] To fit the 8 x 1 in. test tube. Such stoppers also fit the average 250 cc. Erlenmeyer flask and the 250 cc. generator bottle (if the neck is small); they also fit the 2500 cc. bottle (acid bottle)—see *List B*.

[4] See Exp. **10**. Straight stem of thistle tube must fit the rubber stopper.

## *List B — Special Apparatus*

This list includes apparatus used infrequently or of such a nature that it may be used by a class or groups. Numbers in parentheses refer to experiments.

1 Battery, 4 or more cells (30, 70, 72, etc.).
1 Battery jar, 4½ in. diam. (70, 72).
2 Beakers, No. 3 (63, 78).
2 Bottles, 2500 cc. (13).
2 Burettes, 50 cc. (78).
1 Burner, acetylene (87).
1 Chlorine tube (29).
1 Clamp, medium (extra) (78).
1 Condenser, complete (26, 127).
1 Crucible and cover, porcelain, No. 0 (9, 32, 81).
1 Crucible, Hessian (sand), 4 in. deep (80, 208).
1 Crucible, iron, 60 cc. (55).
1 Crucible block, wood, 4 x 4 x 1 in. (9, 32).
1 Dish, lead (147, 150, 152).
1 Electric bell (70, 72).
2 Electrodes, carbon (70, 72).
1 Electrolysis apparatus (30, 75).
1 Flask, 500 cc. (26, 127).
1 Hydrometer (135).
1 Jar, 12 x 4 in. (62, 65).
1 Magnet (216).
6 in. Nichrome wire (Int. **5** (4)).
1 Pan, iron, 4 in. (204).
1 Sq. in. Platinum foil (30).
3 in. Platinum wire (Int. **5** (4)).
1 Retort, 250 cc. (47).
1 Screw, Hofmann (13).
1 Thermometer, −10 to 110° C. (frequently).
1 Triangle (9, 32).
1 Tripod (9, 32).
1 Tube graduated, 100 cc. (62, 65).
1 U-tube, 4 in. (71, 77).
1 Welsbach burner and mantle (102).
1 Wing-top burner (Int. **3** (*b*)).

## *List C — General Apparatus*

Numbers in parentheses refer to experiments.

1 Balance (61–65).
1 Barometer (13, 61, 62, 64, 65).
1 set Cork borers (Int. **5** (3)).
1 File, round (Int. **5**, (3)).
1 File, triangular (Int. **3** (*a*)).
2 Cylinders, graduated, 250 cc. and 500 cc.
1 Microscope (108).
1 Scales.
1 set Weights for balance, 1 mg. to 50 gm.
1 set Weights for scales, 1 gm. to 500 (or 1000) gm.
Wooden blocks, 6 x 6 x 1 and 4 x 4 x ½ (with ½ in. hole in center) (33, 35).

THIS PAGE IS LOCKED TO FREE MEMBERS
Purchase full membership to immediately unlock this page

HISTORY

Tens of thousands of important historical sources, many previously unobtainable, are now available for the first time with a Forgotten Books Full Membership.

Unlimited Access
$8.99/month

Continue

*Fair usage policy applies

Clay (207).
Cobalt chloride.
nitrate (76).
Cochineal (210).
Collodion (126).
Copper, borings.
wire (No. 20).
bromide (76).
nitrate (51, 76).
sulphate.
Cream of tartar (44).

Dextrin (125).

Ether (114, 129).

Fehling's solution ( *see* Exp. **106**).
Ferric ammonium citrate (221).
Ferric and ferrous salts (*see* Iron).
Formalin (128).
Fusible metal (2, 169).

Gasoline (114).
Gelatin.
German silver (188).
Glass wool (13).
Glycerin (18).
Glucose. *See* Grape sugar.
Gold leaf.
Grape sugar.
Graphite, artificial (88).
native (88).
Guncotton (126).

Hydrogen dioxide (8).

Iodine.
Infusorial earth (150).
Iron filings (54).
powder.
thread (Steel wool).
chloride (ic).
sulphate (ous).
sulphide (ous).

Lead, sheet.
tea.
acetate.
dioxide (8, 41).
nitrate.
monoxide (litharge).
red (tetroxide), (41, 236).
white (carbonate), (86, 236).
Lignite (81).
Lime. *See* Calcium oxide.
Litmus paper.
solution (71).

Magnesium, powder (32).
ribbon.
carbonate (89).
chloride.
oxide (224).
sulphate.
Manganese dioxide.
sulphate (241).
Mercury (229).
chloride (ic).
nitrate (ic), (226).
nitrate (ous), (226, 238).
oxide (8).

Nickel chloride (76, 222).
sulphate (76).

Paraffin wax (152).
Phenol-phthalein solution (78, 87, 90).
Phosphorus, red (164).
yellow (164).
Plaster of Paris (97).
Potash (178).
Potassium (16, 173).
bromide.
carbonate.
chlorate (cryst.).
chlorate (powd.).
chloride.

Potassium (16, 173).
chromate.
cyanide (186).
dichromate.
ferricyanide.
ferrocyanide.
hydroxide.
iodide.
nitrate.
nitrite (223).
perchlorate (66).
permanganate.
sulphate.
sulphocyanate (218, 220).
Pumice (150).

Rochelle salt (*see* Exp. **106**).
Rosin (109).

Shellac (powd.), (204).
Silicon (146).
Silver nitrate.
sulphate (73).
Soda-lime.
Sodium, metal.
acetate (69).
ammonium phosphate (160).
bicarbonate.
carbonate.
chloride.
cobaltinitrite (174).
dichromate (76).
hydroxide.
nitrate.
nitrite (45, 69).
peroxide (8).
Sodium, phosphate (acid), (69).
phosphate (disodium), (69, 224).
silicate (148).
sulphate.
sulphate (acid), (69).
sulphite (134).
thiosulphate (hyposulphite), (28, 193).
Solder (236, 237).
Steel wool. *See* Iron thread.
Stannous chloride (232).
Strontium nitrate (200, 204).
Sulphur, flowers (130).
roll.

Tannin (125).
Tartar emetic (139).
Thermit (208).
Tin foil (236).
granulated.
rod (234, 235).
Turpentine (33).
Type metal (236).

Whiting (86, 197).
Wood's metal (169), (*see* Fusible metal).

Zinc dust (9).
granulated.
sheet.
Zinc chloride (24).
oxide (225).
sulphate.

## *List E — Miscellaneous Supplies*

Numbers in parentheses refer to experiments.

Apple (14).
Baking powder (86, 113, 215).
Bluing (220).
Bread (14, 123, 124).
Brick.
Bullets (236).
Butter (114).
Calico (33).
Candle, paraffin (80).
Candy (107).
Celery (14).
Cloth, colored (34).
    unbleached (34).
Coal, hard (81).
    soft (81, 94).
Coke (99).
Corks, assorted (*see* Exp. **82**).
Cotton.
Cotton-seed oil (115).
Cracker (14, 124).
Cranberry (14).
Emery paper (Int. **3**).
Excelsior (25).
Fertilizer (159).
Flour (120).
Flower pot (220).
Gas carbon (99).
Gelatin (103).
Grape juice (44).
Hay (25).
Iron, cast (216).
    nails.
    rust (220).
    steel (216).
    wrought (216).
Jam (107).
Jelly (44, 107).
Joss sticks (frequently used).
Kerosene (18).
Lard (114, 115).
Leather (103).
Lemon juice (44).
Maple sugar (107).
Matches.
Meat (14, 103).
Milk (44).
Molasses (107).
Mortar, old (86, 197).
Mustard (103).
Pickles (44).
Plaster (197).
Potato (14, 108, 123).
Quill toothpick (48).
Raisins (25).
Rice (123).
Rock, rusty (220).
Sand.
Shot (236).
Sirup, table (107).
Soap.
Starch (108).
Sugar.
Tallow (114).
Tar (99).
Taper, wax (10).
Thread.
Tin, sheet (220).
Tooth powder.
Vinegar (112).
Wood ashes (44).
Yeast (127).

THIS PAGE IS LOCKED TO FREE MEMBERS
Purchase full membership to immediately unlock this page

Get Smart

Over 2,000 years of human knowledge in 797,885 volumes

Instant access $8.99/month

Continue

*Fair usage policy applies

Nitric acid, dilute, 1 vol. to 5 vols. water.

Phenol-phthalein. Dissolve 1 gm. in 100 cc. alcohol and dilute slightly with water.

Potassium permanganate, 5 per cent.

Potassium sulphocyanate, 5 per cent.

Silver nitrate, 5 per cent. Use distilled water.

Silver sulphate, .5 per cent. Use distilled water.

Sodium cobaltinitrite. Dissolve 10 gm. sodium nitrite in 20 cc. water; dissolve 6 cc. acetic acid and 1 gm. cobaltous nitrate in 15 cc. water. Mix these solutions and filter.

Stannous chloride. Reduce conc. hydrochloric acid with tin, dilute with water, and keep tin in this solution.

Sulphuric acid, dilute. Slowly pour 1 vol. acid into 5 vols. of water, stirring constantly.

N'

THIS PAGE IS LOCKED TO FREE MEMBERS
Purchase full membership to immediately unlock this page

HISTORY

Tens of thousands of important historical sources, many previously unobtainable, are now available for the first time with a Forgotten Books Full Membership.

Unlimited Access
$8.99/month

Continue

*Fair usage policy applies

Return to desk from
This book is DUE on the la

27Feb'51BC

24Apr'59DF

REC'D LD

11Oct'59KB

REC'D LD
NOV 11 1959

LD 21-100m-11,'49(B7146s16)476

# TABLE OF ATOMIC WEIGHTS

| Element | Symbol | International | Approximate | Element | Symbol | International | Approximate |
|---|---|---|---|---|---|---|---|
| Aluminium | Al | 27.1 | 27 | Molybdenum | Mo | 96.0 | — |
| Antimony | Sb | 120.2 | 120 | Neodymium | Nd | 144.3 | — |
| Argon | A | 39.88 | 40 | Neon | Ne | 20.2 | 20 |
| Arsenic | As | 74.96 | 75 | Nickel | Ni | 58.68 | 58.5 |
| Barium | Ba | 137.37 | 137 | Niton | Nt | 222.4 | — |
| Bismuth | Bi | 208.0 | 208 | Nitrogen | N | 14.01 | 14 |
| Boron | B | 11.0 | 11 | Osmium | Os | 190.9 | — |
| Bromine | Br | 79.92 | 80 | Oxygen | O | 16.00 | 16 |
| Cadmium | Cd | 112.40 | 112 | Palladium | Pd | 106.7 | — |
| Caesium | Cs | 132.81 | — | Phosphorus | P | 31.04 | 31 |
| Calcium | Ca | 40.07 | 40 | Platinum | Pt | 195.2 | 195 |
| Carbon | C | 12.00 | 12 | Potassium | K | 39.10 | 39 |
| Cerium | Ce | 140.25 | — | Praseodymium | Pr | 140.6 | — |
| Chlorine | Cl | 35.46 | 35.5 | Radium | Ra | 226.4 | 226.5 |
| Chromium | Cr | 52.0 | 52 | Rhodium | Rh | 102.9 | — |
| Cobalt | Co | 58.97 | 59 | Rubidium | Rb | 85.45 | — |
| Columbium | Cb | 93.5 | — | Ruthenium | Ru | 101.7 | — |
| Copper | Cu | 63.57 | 63.5 | Samarium | Sa | 150.4 | — |
| Dysprosium | Dy | 162.5 | — | Scandium | Sc | 44.1 | — |
| Erbium | Er | 167.7 | — | Selenium | Se | 79.2 | — |
| Europium | Eu | 152.0 | — | Silicon | Si | 28.3 | 28 |
| Fluorine | F | 19.0 | 19 | Silver | Ag | 107.88 | 108 |
| Gadolinium | Gd | 157.3 | — | Sodium | Na | 23.00 | 23 |
| Gallium | Ga | 69.9 | — | Strontium | Sr | 87.63 | 87.5 |
| Germanium | Ge | 72.5 | — | Sulphur | S | 32.07 | 32 |
| Glucinum | Gl | 9.1 | — | Tantalum | Ta | 181.5 | — |
| Gold | Au | 197.2 | 197 | Tellurium | Te | 127.5 | — |
| Helium | He | 3.99 | 4 | Terbium | Tb | 159.2 | — |
| Holmium | Ho | 163.5 | — | Thallium | Tl | 204.0 | — |
| Hydrogen | H | 1.008 | 1 | Thorium | Th | 232.4 | — |
| Indium | In | 114.8 | — | Thulium | Tm | 168.5 | — |
| Iodine | I | 126.92 | 127 | Tin | Sn | 119.0 | 119 |
| Iridium | Ir | 193.1 | — | Titanium | Ti | 48.1 | — |
| Iron | Fe | 55.84 | 56 | Tungsten | W | 184.0 | — |
| Krypton | Kr | 82.92 | — | Uranium | U | 238.5 | — |
| Lanthanum | La | 139.0 | — | Vanadium | V | 51.0 | — |
| Lead | Pb | 207.10 | 207 | Xenon | Xe | 130.2 | — |
| Lithium | Li | 6.94 | — | Ytterbium | Yb | 172.0 | — |
| Lutecium | Lu | 174.0 | — | Yttrium | Yt | 89.0 | — |
| Magnesium | Mg | 24.32 | 24 | Zinc | Zn | 65.37 | 65 |
| Manganese | Mn | 54.93 | 55 | Zirconium | Zr | 90.6 | — |
| Mercury | Hg | 200.6 | 200.5 | | | | |